CP–8061

Sub. Code
13

B.Sc. DEGREE EXAMINATION, NOVEMBER 2017

Interior Design

HISTORY OF ART AND ARCHITECTURE

(Upto 2015 batch)

Time : 3 Hours Maximum : 60 Marks

Part A ($5 \times 2 = 10$)

Answer **all** questions.

1. (a) Write short notes on old stone Age.

Or

(b) List out the factors influencing architecture with reference to Egypt.

2. (a) Explain the architectural character of Greece.

Or

(b) Write about Doric order.

3. (a) Write about Indus valley civilization.

Or

(b) List out the two architectural examples of Gupta.

4. (a) Write short notes on shore temple.

Or

(b) Write examples for Dravidian architecture.

5. (a) Give few examples for indo Aryan architecture.

Or

(b) List two salient features of Indo Aryan architecture.

Part B (5 × 10 = 50)

Answer **all** questions.

6. (a) Describe the development of Shetter related to pre historic age.

Or

(b) Explain Egypt architecture as "Great pyramid of chrops".

7. (a) Explain in detail about "The Parthenon. Athens"

Or

(b) Explain the characteristics of Greek architecture with examples.

8. (a) Explain the evolution of Hindu temple with necessary sketches.

Or

(b) Explain the early shrines of Gupta and chalukyan period.

9. (a) Give a detailed description about the Brihadeeswara temple in Tanjore.

Or

(b) Write about the Dravidian culture and the rock cut productions under pallavas.

10. (a) Explain Lingaraja Temple in Bhuvaneshwara.

Or

(b) Explain sun temple in Kornak.

CP–8062

Sub. Code
14

B.Sc. DEGREE EXAMINATION, NOVEMBER 2017

Interior Design

BASIC PLANNING AND DESIGNING – PRACTICAL

(Upto 2015 batch)

Time : 3 Hours Maximum : 60 Marks

Part A (2 × 5 = 10)

Answer **all** questions.

1. What are the different types of scales and explain its uses and applications?

2. Sketch a plan, illustrating the space planning for a kitchen.

Part B (5 × 10 = 50)

Answer the following questions.

3. Design a residence for a proposed site of 60' × 40'. The frontage of the space is 10 feet and the ceiling height is 10 feet. Draw to scale the following :

   (a) Floor plan (10)

   (b) Furniture layout (10)

   (c) One wall elevation (10)

   (d) One sectional elevation (10)

   (e) Any 3d view considering the above details with concept. (10)

———————

CP–8063

Sub. Code
15

B.Sc. DEGREE EXAMINATION, NOVEMBER 2017

Interior Design

ELEMENTS OF DESIGN (PRACTICAL)

(Upto 2015 batch)

Time : 3 Hours Maximum : 60 Marks

Answer **all** questions.

Part A (5 × 3 = 15)

1. Draw the plan and elevation of a "Table".

2. Construct a regular polygon.

3. Show the shading techniques for a square and circle.

4. Draw a window grill.

5. Draw a cylinder with shades and shadows.

Part B (45)

Assume necessary details.

6. Draw the plan and front elevation of the layout. (10)

7. Draw an isometric view of the layout. (25)

8. Render the view with shades and shadows. (10)

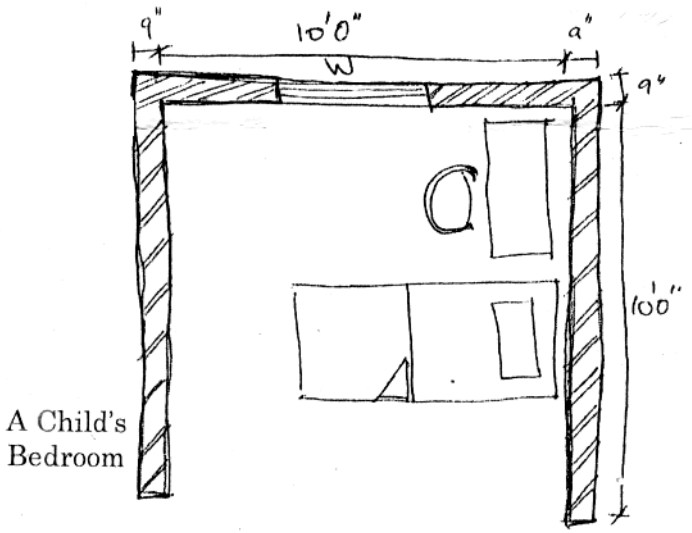

CP–8066

Sub. Code
23

B.Sc. DEGREE EXAMINATION, NOVEMBER 2017

Interior Design

HISTORY OF INTERIOR DESIGNING

(Upto 2015 batch)

Time : 3 Hours Maximum : 60 Marks

Part A (5 × 2 = 10)

Answer **all** questions.

1. (a) Define the term 'Interior design'.

Or

(b) Explain the role of themes and concepts in Interior design.

2. (a) What are the factors influencing Christian architecture?

Or

(b) Write any two architectural features of St. Sophia.

3. (a) What is Hinayana Buddhism?

Or

(b) Explain any two salient features of Ashokan Pillar, Sarnath.

4. (a) Mention any two works of Charles Corrta.

Or

(b) Write any two philosophies of Louis Khan.

5. (a) What is Colonialism?

Or

(b) What is Indo-Sarcenic architecture?

Part B $(5 \times 10 = 50)$

Answer **all** questions.

6. (a) Describe briefly about the principles and elements of Interior design.

Or

(b) Explain in detail the different themes and concepts in interior design.

7. (a) Describe briefly the factors influencing Byzantine architecture and its architectural features.

Or

(b) Explain the architectural characteristics of St. Clement, Rome.

8. (a) Explain briefly about the architectural productions during Ashoka's rule.

Or

(b) Describe briefly about the salient features of Chaitya Hall – Gandhara Art.

9. (a) Explain in detail the works of any two post-modern architects.

Or

(b) Explain in detail the works of F.L. Wright.

10. (a) Describe briefly about Indo-Sarcenic architecture with examples.

Or

(b) Explain about PWD and the institutionalization of architecture.

CP–8067

Sub. Code
24

B.Sc. DEGREE EXAMINATION, NOVEMBER 2017.

Interior Design

COMPUTER BASICS — PRACTICAL

Time : 3 Hours Maximum : 60 Marks

Part A ($5 \times 2 = 10$)

Answer **all** questions.

1. (a) State any four input devices.

Or

(b) Write short note on characteristics of computers.

2. (a) List any four file operations in MS-Word.

Or

(b) State any four views in MS-Word.

3. (a) What is a pivot table?

Or

(b) What do you mean by self formatting?

4. (a) How do you set custom timings for slides in a presentation?

Or

(b) How do you change bullets and numbering in MS-Powerpoint.

5. (a) What is a network?

Or

(b) What do you mean by topology?

Part B (5 × 10 = 50)

Answer **all** questions.

6. (a) Explain the generation of computers.

Or

(b) Explain the anatomy of digital computer.

7. (a) List and explain the text formatting commands and their usage.

Or

(b) Illustrate the procedure to perform mail merge with suitable example.

8. (a) Explain the components available in a work sheet.

Or

(b) List and explain any ten functions available in MS-Excel and their usage.

9. (a) Prepare a presentation about your university by using 5 slides.

Or

(b) Illustrate custom animation and slide transition with example.

10. (a) Explain the architecture of network.

Or

(b) Explain communication medium.

CP–8068

Sub. Code
25

B.Sc. DEGREE EXAMINATION, NOVEMBER 2017

Interior Design

DRAFTING FOR INTERIORS – PRACTICAL

Time : 3 Hours Maximum : 60 Marks

The Examiner should cut and give ONE question to each Candidate from lot.

Answer **all** questions.

1. Draft a kitchen 16' × 16'. Draw the following

   (a) Plan with furniture layout

   (b) One point perspective view

   (c) Short notes on doors and window

   (d) Explain basic architectural symbols.

---------- Cut here ----------

2. Draft a Ice cream shop 20' × 15

   (a) Plan with furniture layout

   (b) One point perspective view

   (c) Short notes on corners and mouldings

   (d) Explain the plumbing fittings.

3. Draft a dining room of 15' × 10'. Draw the following.
   (a) Plan with furniture layout
   (b) Two point perspective view of the room
   (c) Explain electrical fittings used with sketches
   (d) Write short notes on wall finishes.

---------- Cut here ----------

4. Draft a kid's bedroom 10'6" × 12'0".
   (a) Plan and furniture layout
   (b) One point perspective of the room
   (c) Short notes on false ceiling
   (d) Explain basic architectural symbols.

---------- Cut here ----------

5. Draft a master bedroom of 10'9" × 12'0".
   (a) Plan and furniture layout
   (b) Two point perspective view of the room
   (c) Draw building material symbols
   (d) Short notes on staircase.

CP–8069	Sub. Code
	31

B.Sc. DEGREE EXAMINATION, NOVEMBER 2017

Interior Design

MODERN INTERIORS

(Upto 2015 Batch)

Time : 3 Hours Maximum : 60 Marks

Part A (5 × 2 = 10)

Answer **all** questions.

1. (a) Define the term Interior Design.

Or

(b) List any two features of Modern Interior Design.

2. (a) State the advantages and disadvantages of suspended ceiling.

Or

(b) Define False ceiling.

3. (a) Sketch an Ergonomic Triangle in a kitchen.

Or

(b) Sketch an ideal kitchen plan of your choice.

4. (a) What are the guidelines for good natural lighting?

Or

(b) Explain Electrical Wiring Process.

5. (a) What are basic interior elements that composes an office space.

Or

(b) List any two design criteria for office planning.

Part B (5 × 10 = 50)

Answer **all** questions.

6. (a) Explain with background the emergence of professional interior designers.

Or

(b) Discuss 'composition' with examples in the context of modern interior design.

7. (a) Explain the drawing methods adopted in false ceiling.

Or

(b) Explain different types of suspended ceiling with sketches.

8. (a) Describe in detail the introduction to modular kitchen.

Or

(b) Explain in detail the different types of kitchen plan.

9. (a) What are the different types of lighting arrangements?

Or

(b) Describe various types of lamps used for lighting in buildings.

10. (a) Design an office space for an interior designer. He employs four people with one computer for each.

Or

(b) Discuss Modern Office Planning with a typical office as an example. Draw sketches as necessary.

CP–8070

Sub. Code
32

B.Sc. DEGREE EXAMINATION, NOVEMBER 2017

Interior Design

MATERIAL SCIENCE – I

(Upto 2015 batch)

Time : 3 Hours Maximum : 60 Marks

Part A (5 × 2 = 10)

Answer **all** questions.

1. (a) Define Ceramic.

Or

(b) Define Refactory materials.

2. (a) What are the characteristics of an ideal paint?

Or

(b) List any two solvent used in paints.

3. (a) Draw the details of wash basin fixing.

Or

(b) What are the different types of closets?

4. (a) What types of partition can be used in office space?

Or

(b) What are the advantages of Timber Parttitions.

5. (a) Write about the importance of upholstery.

Or

(b) What are the types of Floor covering?

Part B (5 × 10 = 50)

Answer **all** questions.

6. (a) State the advantages, disadvantages and uses of Terra – Cotta.

Or

(b) What are clay products and what are the commonly used clay products.

7. (a) Explain about different tools used in Painting.

Or

(b) What are the types of Paint. Explain with examples.

8. (a) Draw and explain the construction of a shower cubical.

Or

(b) What are the different types of bathroom fittings?

9. (a) Define Partition. Differentiate between pre – cast concrete partitions and cast – in – site concrete partitions.

Or

(b) Explain the types of partition walls with examples.

10. (a) Explain in detail about the material used for hospital floor.

Or

(b) Explain the following :

(i) Floor covering.

(ii) Venetian blinds.

CP–8071

Sub. Code
33

B.Sc. DEGREE EXAMINATION, NOVEMBER 2017

Interior Design

CONSTRUCTION TECHNIQUES

Time : 3 Hours Maximum : 60 Marks

Part A (5 × 2 = 10)

Answer **all** questions.

1. (a) What are the components of a building?

Or

(b) Define Plinth.

2. (a) What are the effects of damp proofing?

Or

(b) What causes dampness?

3. (a) Define stone masonary.

Or

(b) What are the tools used for masonary?

4. (a) Define Balister.

Or

(b) Mention two types of stairs.

5. (a) Define centering of arches.

Or

(b) Mention any two types of arches.

Part B (5 × 10 = 50)

Answer **all** questions.

6. (a) Explain the types of foundation in detail.

Or

(b) Explain the functional requirements of a building.

7. (a) What is damp proofing and what are the causes for it?

Or

(b) What are the methods for damp proofing?

8. (a) Draw a dog legged staircase and name the components.

Or

(b) What are the different materials used for staircase? Explain in detail.

9. (a) Give the comparison between stone masonary and brick masonary.

Or

(b) Explain what is dressing of stone and size and weights.

10. (a) What is called centering of arches? Explain in detail.

Or

(b) Give a detailed description on arches.

CP–8072

Sub. Code
34

B.Sc. DEGREE EXAMINATION, NOVEMBER 2017

Interior Design

AUTO CAD (I) — PRACTICAL

Time : 3 Hours Maximum : 60 Marks

Part A (6 × 5 = 30)

Answer **all** questions.

1. Explain OOPS.

2. What are aperture, solid and M text?

3. Differentiate fillet and block.

4. Compare DIM radius and DIM centre.

5. What is the use of dimensioning in Auto CAD?

6. What is trace? Give its importance.

Part B (3 × 10 = 30)

Answer **all** questions.

7. Draw a plan of a Bedroom of size 12 feet × 16 feet.

8. Draw the furniture layout for 10 feet × 12 feet of a living room.

9. Draw two sectional elevation for a house of 3 room of size 16 feet × 20 feet each.

———————

CP–8073

Sub. Code
35

B.Sc. DEGREE EXAMINATION, NOVEMBER 2017

Interior Design

DESIGN STUDIO — I – PRACTICAL

Time : 3 Hours Maximum : 60 Marks

Answer ALL questions.

The Examiner should cut and give ONE question to each.

1. Draft a 3BHK flat. Draft the following :

   (a) Floor plan

   (b) Furniture layout

   (c) Short notes on ventilation of the space

   (d) Perspective of the room.

---------- Cut here ----------

2. Draft a 20'×16' master bedroom :

   (a) Plan with furniture layout

   (b) Short notes on curtains and blind's

   (c) Perspective of the room

   (d) Short notes on electrical points in the room.

3. Draft a 10'×12' study room :

   (a) Floor plan

   (b) Furniture layout

   (c) Short notes on light fixtures

   (d) Perspective of the room.

---------- Cut here ----------

4. Draft a jwellery showroom :

   (a) Floor plan with furniture

   (b) Shorts note on false ceiling

   (c) One point perspective of the display area

   (d) 2 sections or elevations of the display area.

---------- Cut here ----------

5. Draft a bedroom :

   (a) Floor plan with furniture layout

   (b) Short notes on flooring

   (c) Perspective of the room

   (d) Explain the furnishings used in the room with sketches.

CP–8074

Sub. Code
41

B.Sc. DEGREE EXAMINATION, NOVEMBER 2017

Interior Design

FURNITURE DESIGN

Time : 3 Hours Maximum : 60 Marks

Part A (5 × 2 = 10)

Answer **all** questions.

1. (a) What is period furniture?

Or

(b) What is heritage furniture?

2. (a) Explain the term sawing, moulding and rebating.

Or

(b) Draw a sketch of cross lap joint.

3. (a) Define the term modular.

Or

(b) Define ergonomics.

4. (a) Sketch a view of a coffee table in a lobby.

Or

(b) Sketch a view of a refrigerator in a kitchen.

5. (a) Define partition walls.

Or

(b) Name the wood variety used in panelling.

Part B (5 × 10 = 50)

Answer **all** questions.

6. (a) What is heritage furniture? List and explain few periods.

Or

(b) What is evolution of furniture? Explain the different periods of furniture.

7. (a) What are the various types of joints used in furniture, explain with sketches.

Or

(b) Explain with sketches the different types of tools used in carpentry.

8. (a) Sketch an isometric view of a 3 seater sofa.

Or

(b) Sketch an isometric view of a dining table.

9. (a) Draw a drafting board to appropriate scale and dimensions.

Or

(b) Draw the plan and section of a kitchen of your choice to a appropriate scale.

10. (a) What are the various types of partition wall? Draw any one type of partition with plan and sections.

Or

(b) Draw a panelling with necessary details.

———————

CP–8075

Sub. Code
42

B.Sc. DEGREE EXAMINATION, NOVEMBER 2017.

Interior Design

MATERIAL SCIENCE – II

(Upto 2015 batch)

Time : 3 Hours Maximum : 60 Marks

Part A ($5 \times 2 = 10$)

Answer **all** questions.

1. (a) Distinguish between Limestone and Kankar.

Or

(b) Give classification, qualities, uses and localities where they are available in India of the following stones

(i) Laterite

(ii) Sandstone

2. (a) Define Scaffolding and mention its component parts.

Or

(b) Give sketches of flying shore.

3. (a) Mention the uses of plywoods.

Or

(b) Mention the applications of FRP in building industry.

4. (a) Describe the various types of glass.

Or

(b) Mention the uses of metals.

5. (a) Give a list of different types of doors and windows.

Or

(b) Write short notes on pivoted window.

Part B $(5 \times 10 = 50)$

Answer **all** questions.

6. (a) What are the various uses of stones?

Or

(b) What are the qualities of a good building stones?

7. (a) What is meant by term sharing and mention its types?

Or

(b) Differentiate between single Scaffolding and double Scaffolding.

8. (a) Enumerate the general properties of plastics.

Or

(b) What are plywoods? Mention their advantages.

9. (a) Mention the properties and uses of various types of glass.

Or

(b) Discuss the economics of using aluminimum products.

10. (a) Discuss the provisions of doors and windows in a structure with respect to the following location, purpose and size.

Or

(b) Describe with neat sketches different types of windows.

———————

CP–8076

Sub. Code
43

B.Sc. DEGREE EXAMINATION, NOVEMBER 2017

Interior Design

BUILDING CONSTRUCTION

(Upto 2015 batch)

Time : 3 Hours Maximum : 60 Marks

Part A (5 × 2 = 10)

Answer **all** questions.

1. (a) Enumerate various uses of timber.

Or

(b) Compare soft woods with Hardwoods.

2. (a) What are the materials used in making an R.C.C. work?

Or

(b) What is meant by a frame structure?

3. (a) What are the requirements of a well planned roof?

Or

(b) Write short notes on ventilators in pitched roofs.

4. (a) Mention the objects of pointing on different surfaces.

Or

(b) What are the requirement of good plaster?

5. (a) Why is formwork necessary?

Or

(b) Describe the materials which are used for preparing formwork.

Part B $(5 \times 10 = 50)$

Answer **all** questions.

6. (a) Mention the qualities of a good timber.

Or

(b) Enumerate the various defects in timber.

7. (a) Mention the advantages and disadvantages of pre-cast concrete construction.

Or

(b) Discuss in detail the various types of concrete foundation.

8. (a) Define a pitched roof and explain its various types.

Or

(b) What are the advantages of steel trusses over timber trusses?

9. (a) What is pointing? What are its different types?

Or

(b) Describe the method of plastering.

10. (a) Explain with neat sketches the formwork used for column and column footings.

Or

(b) What is a dome? What are types of formwork used for its construction?

CP–8077

Sub. Code
44

B.Sc. DEGREE EXAMINATION, NOVEMBER 2017

Interior Design

AUTOCAD — II — PRACTICAL

(Upto 2015 Batch)

Time : 3 Hours Maximum : 60 Marks

Answer the following.

1. Design a studio apartment for a fashion photographer.
   - (a) Draft the plan (5)
   - (b) Furniture layout (10)
   - (c) Sections (4 sections) (35)
   - (d) Isometric view (10)

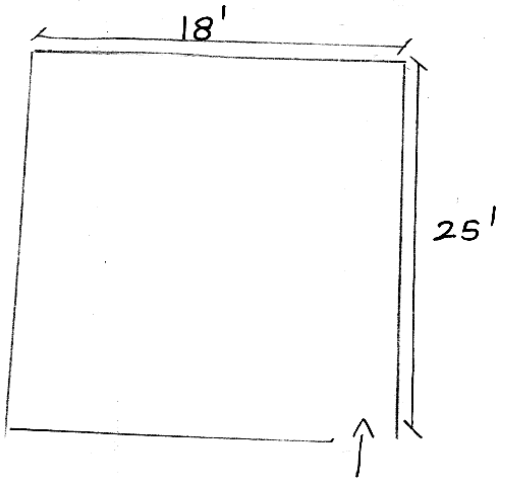

CP–8078

Sub. Code
45

B.Sc. DEGREE EXAMINATION, NOVEMBER 2017.

Interior Design

DESIGN STUDIO II

Time : 3 Hours Maximum : 60 Marks

Answer the following.

Part A (2 × 5 = 10)

1. Explain the requirement of a theme restaurant.

2. Write a brief note on the factors required for designing workstations to improve efficiency of work among the employees.

Part B – (50 Marks)

3. Design a garment showroom 14’ × 14’ (Scale 1:16).

   (a) Floor plan with furniture layout.

   (b) Brief note on the concept, materials and finishes.

   (c) One perspective view or isometric view.

   (d) Reflected ceiling plan.

———————

CP–8079

Sub. Code
51

B.Sc. DEGREE EXAMINATION, NOVEMBER 2017

Interior Design

BUSINESS MANAGEMENT

(Upto 2015 batch)

Time : 3 Hours Maximum : 60 Marks

Part A (5 × 2 = 10)

Answer **all** questions.

1. (a) Define the term administration.

Or

(b) List down the steps in the process of management.

2. (a) What is planning?

Or

(b) Define forecasting.

3. (a) Explain span of control.

Or

(b) What is decentralisation of Authority?

4. (a) Describe supervision.

Or

(b) Define motivation and morale.

5. (a) What is controlling?

Or

(b) What is co-ordination?

Part B (5 × 10 = 50)

Answer **all** questions.

6. (a) Explain Henri Fayol's list of management principles.

Or

(b) List and describe the various levels of management.

7. (a) Describe the objectives, importance and advantages of planning.

Or

(b) Explain in detail the different types of planning.

8. (a) Describe formal and informal organisation.

Or

(b) Write about the nature and elements of an organisation.

9. (a) Define directing and explain the nature and scope of directing.

Or

(b) Define motivation. What are the benefits of motivation?

10. (a) Explain the nature and process of controlling.

Or

(b) Explain the various techniques of co-ordination.

———————

CP–8080

Sub. Code
52

B.Sc. DEGREE EXAMINATION, NOVEMBER 2017

Interior Design

ESTIMATION AND COSTING

(Upto 2015 batch)

Time : 3 Hours Maximum : 60 Marks

Part A (5 × 2 = 10)

Answer **all** questions.

1. (a) Define estimate.

Or

(b) Name the approximate methods of costing.

2. (a) Define specifications.

Or

(b) Name the types of specifications.

3. (a) Write the use of contract.

Or

(b) What do you mean by labour contract?

4. (a) What is value?

Or

(b) What do you understand by depreciation?

5. (a) What is schedule of rates?

Or

(b) Name the types of quotation.

Part B (5 × 10 = 50)

Answer **all** questions.

6. (a) Explain the need and importance of estimation.

Or

(b) Write a brief note on detailed estimate.

7. (a) Discuss the concept of specifications in estimation and costing.

Or

(b) Briefly explain the types of specification.

8. (a) Discuss the advantages of contract.

Or

(b) Write in detail about labour contract.

9. (a) Explain the different forms of value.

Or

(b) Discuss the need to check obsolescence.

10. (a) Explain the variables to be considered in fixing rates of materials and labour.

Or

(b) What is quotation? Discuss the importance of quotation.

CP–8081

Sub. Code
53

B.Sc. DEGREE EXAMINATION, NOVEMBER 2017

Interior Design

BUILDING SERVICES

(Upto 2015 Batch)

Time : 3 Hours Maximum : 60 Marks

Section A (5 × 2 = 10)

Answer **all** questions.

1. (a) What is 'Fire load'?

Or

(b) List the various types of fire protection systems.

2. (a) Name any four commonly used sound absorbent materials.

Or

(b) What is sound insulation?

3. (a) Write short notes on electrical installation in buildings.

Or

(b) Define 'Fuse'.

4. (a) List the factors that affect ventilation.

Or

(b) What is the purpose of air conditioning?

5. (a) Define trap.

Or

(b) Write short notes on Bath Tub and wash basin.

Section B (5 × 10 = 50)

Answer **all** questions.

6. (a) Explain the fire resisting properties of the following :

Stone, Brick, concrete, steel and glass.

Or

(b) What are the causes and effects of fire?

7. (a) Discuss the factors to be considered in the design of an auditorium.

Or

(b) Explain the different types of sound absorbent materials.

8. (a) List any ten electrical installation, their purpose and their symbols used in a residential building.

Or

(b) Design the layout of electrical systems in a residential building.

9. (a) What are the points to be observed in case natural ventilation?

Or

(b) What is air conditioning? Explain its purpose.

10. (a) Explain sanitary and water supply fixtures in detail.

Or

(b) Explain the following in detail.

(i) Q trap

(ii) Floor trap

(iii) S Trap

(iv) Gully trap

(v) Interception trap.

CP–8082

Sub. Code
54

B.Sc. DEGREE EXAMINATION, NOVEMBER 2017

Interior Design

AUTOCAD – III – PRACTICAL

(Upto 2015 batch)

Time : 3 Hours Maximum : 60 Marks

Answer **all** questions.

Part A (10)

1. Design and draw the plan of a restaurant based on theme forest. Assume the necessary details.

Part B (50)

2. Draw the following of a school building.
   - (a) Floor plan (10)
   - (b) Furniture layout (10)
   - (c) Front elevation (10)
   - (d) Electrical layout (10)
   - (e) Cross-section. (10)

———————

CP–8083

Sub. Code
55

B.Sc. DEGREE EXAMINATION, NOVEMBER 2017

Interior Design

DESIGN STUDIO – III — PRACTICAL

(Upto 2015 Batch)

Time : 3 Hours Maximum : 60 Marks

Answer **all** questions.

Part A (2 × 10 = 20)

1. Design a layout with provision to set up a garment unit of capacity of 100 machine (sewing) capacity.

2. Give the layout design, space requirement for a primary school.

Part B (2 × 20 = 40)

3. Design a shopping centre which will be having Multiplex theatres of 8 numbers, swimming pool, restaurant 2 nos, shop – 10 numbers. The centre is provided with ultra modern facility having car parking, elevators etc and also the complex is fully air conditioned.

4. Design a layout and give the plan for a multi speciality hospital having 50 beds.

———————

CP–8084

Sub. Code
61

B.Sc. DEGREE EXAMINATION, NOVEMBER 2017

Interior Design

LANDSCAPE DESIGN

Time : 3 Hours Maximum : 60 Marks

Part A (5 × 2 = 10)

Answer **all** questions.

1. (a) What is landscape conservation?

Or

(b) Define ecology.

2. (a) What is basic plant data?

Or

(b) What is carbon sink?

3. (a) What is green architecture?

Or

(b) What is charbagh?

4. (a) Explain the site planning for childrens park.

Or

(b) What are the purpose of site planning?

5. (a) Give a brief description on appartment gardening.

Or

(b) What are the purpose of a public gardening?

Part B (5 × 10 = 50)

Answer **all** questions

6. (a) Detailed description on landscape and nature.

Or

(b) Give a detailed description on ecology.

7. (a) Explain plant designing.

Or

(b) What are all the criteria for plant designing?

8. (a) Give a detailed description on Mughal gardens.

Or

(b) Explain Italian gardens.

9. (a) Detailed description on site investigation.

Or

(b) Draw a plan of a children's park and explain the concept.

10. (a) Draw a plan of a terrace garden and explain the design.

Or

(b) What are the various types of landscaping explain in detail?

CP–8085

Sub. Code
62

B.Sc. DEGREE EXAMINATION, NOVEMBER 2017

Interior Design

SCIENCE OF VAASTU

(Upto 2015 batch)

Time : 3 Hours Maximum : 60 Marks

Part A (5 × 2 = 10)

Answer **all** questions.

1. (a) Give the meaning of Vaastu.

Or

(b) Classify Vaastu.

2. (a) What is living organism of a building space?

Or

(b) List out any two negative energies in a building.

3. (a) Enlist the location of bedroom in a building as per Vaastu.

Or

(b) What is the location of kitchen as per vaastu in a building?

4. (a) Give the parameters of vaastu for main door if the building is North facing.

Or

(b) Define 'Pada' in vaastu.

5. (a) Give the basic principle of FengShui-Yin and Yang for living room.

Or

(b) Enlist the basic principle theory of Feng Shui-Yin and Yang for offices.

Part B (5 × 10 = 50)

Answer **all** questions.

6. (a) Explain vaastu purusha mandala in relationship with vaastu and its significance.

Or

(b) List out the achievements of vaastu in India.

7. (a) Explain about good building shapes with relevance to macro, micro enclosed and material spaces.

Or

(b) Explain salient features of good building site as per vaastu.

8. (a) Give ten important hints on planning based on vaastu for location of balcony of a house.

Or

(b) List out any ten important hints on planning based on vaastu for location of bedroom in a house.

9. (a) List out the remedies for north facing house as per vaastu.

Or

(b) List out vaastu parameters for a weft facing building.

10. (a) Enlist the principle of Feng Shui-Yin and Yang theory for interiors of shops.

Or

(b) Enlist the principle of Feng Shui-Yin and Yang theory for bedrooms.

CP–8086

Sub. Code
63

B.Sc. DEGREE EXAMINATION, NOVEMBER 2017

Interior Design

HUMAN RESOURCE MANAGEMENT

Time : 3 Hours Maximum : 60 Marks

Part A (5 × 2 = 10)

Answer **all** questions.

1. (a) What is the role of Personnel Management in manufacturing organizations?

Or

(b) Define Human Resource Management.

2. (a) What is an Application Blank?

Or

(b) Define "Recruitment".

3. (a) What are the purposes of transfer?

Or

(b) What are performance dimensions?

4. (a) What is Productivity?

Or

(b) What are called as incentives?

5. (a) What is Retention profile?

Or

(b) Define "Counselling".

Part B (5 × 10 = 50)

Answer **all** questions.

6. (a) Explain the skills required for a successful Personnel Manager.

Or

(b) Explain the aims and objectives of Personnel management as a function.

7. (a) Explain the various types of interviews.

Or

(b) Explain various methods of selection.

8. (a) Compare the benefits of on-the-job training with off-the-job training.

Or

(b) Explain the various methods of performance appraisal.

9. (a) Explain the various approaches to improve productivity.

Or

(b) Explain the various approaches in motivation.

10. (a) Explain the methods of reducing employee turn-over.

Or

(b) Explain the roles, functions and advantages of counselling.