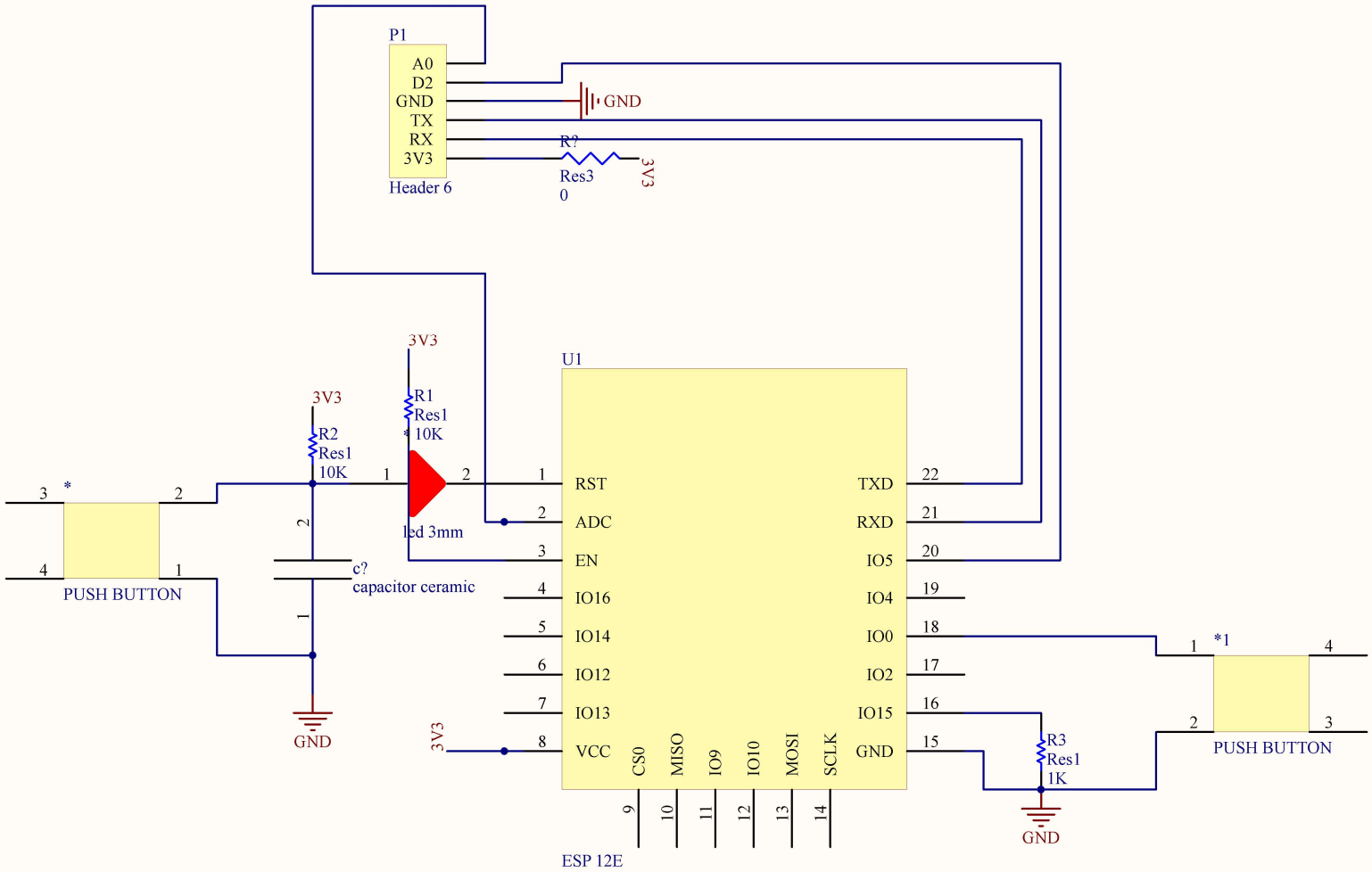

Title		
Size A	Number	Revision
Date: 6/21/2019	Sheet of	
File: C:\Users\..\esp Module.SchDoc	Drawn By:	