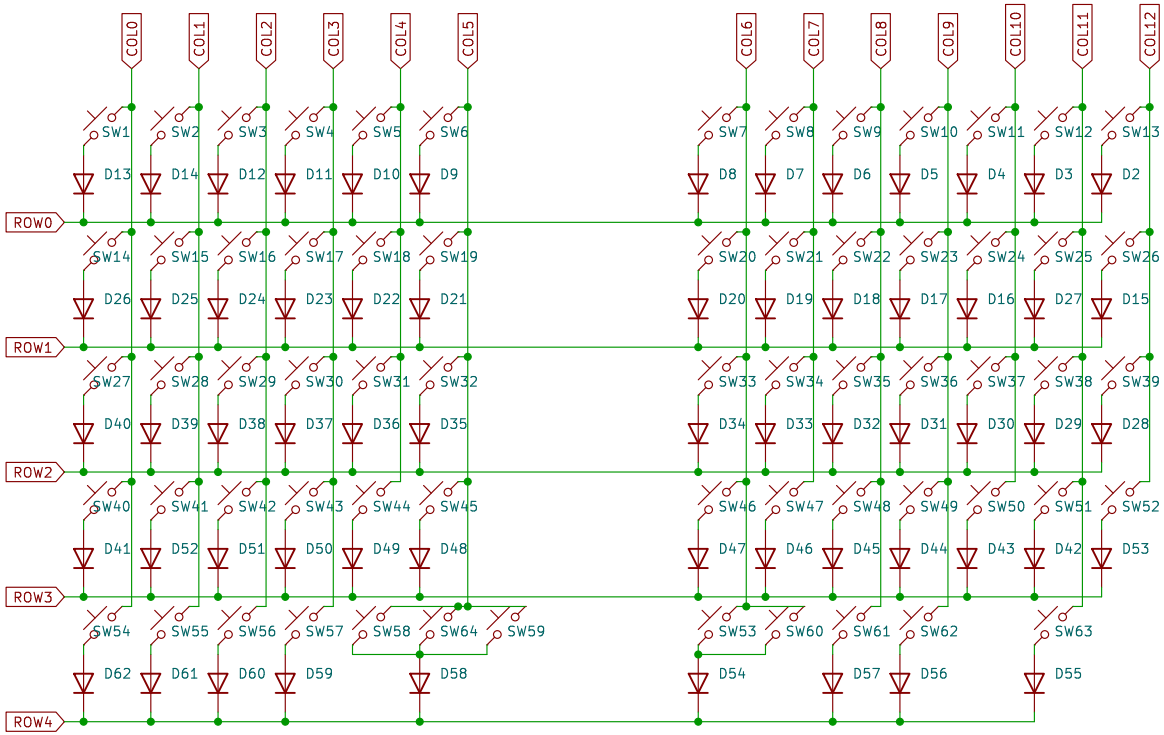

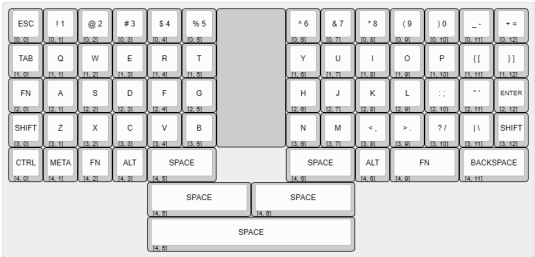

RP2040

File: RP2040.kicad_sch

karugaru

Sheet: /

File: thirteen60.kicad_sch

Title: Thirteen60

Size: A4	Date:	**Rev: 3.0**
KiCad E.D.A. 9.0.3		Id: 1/2

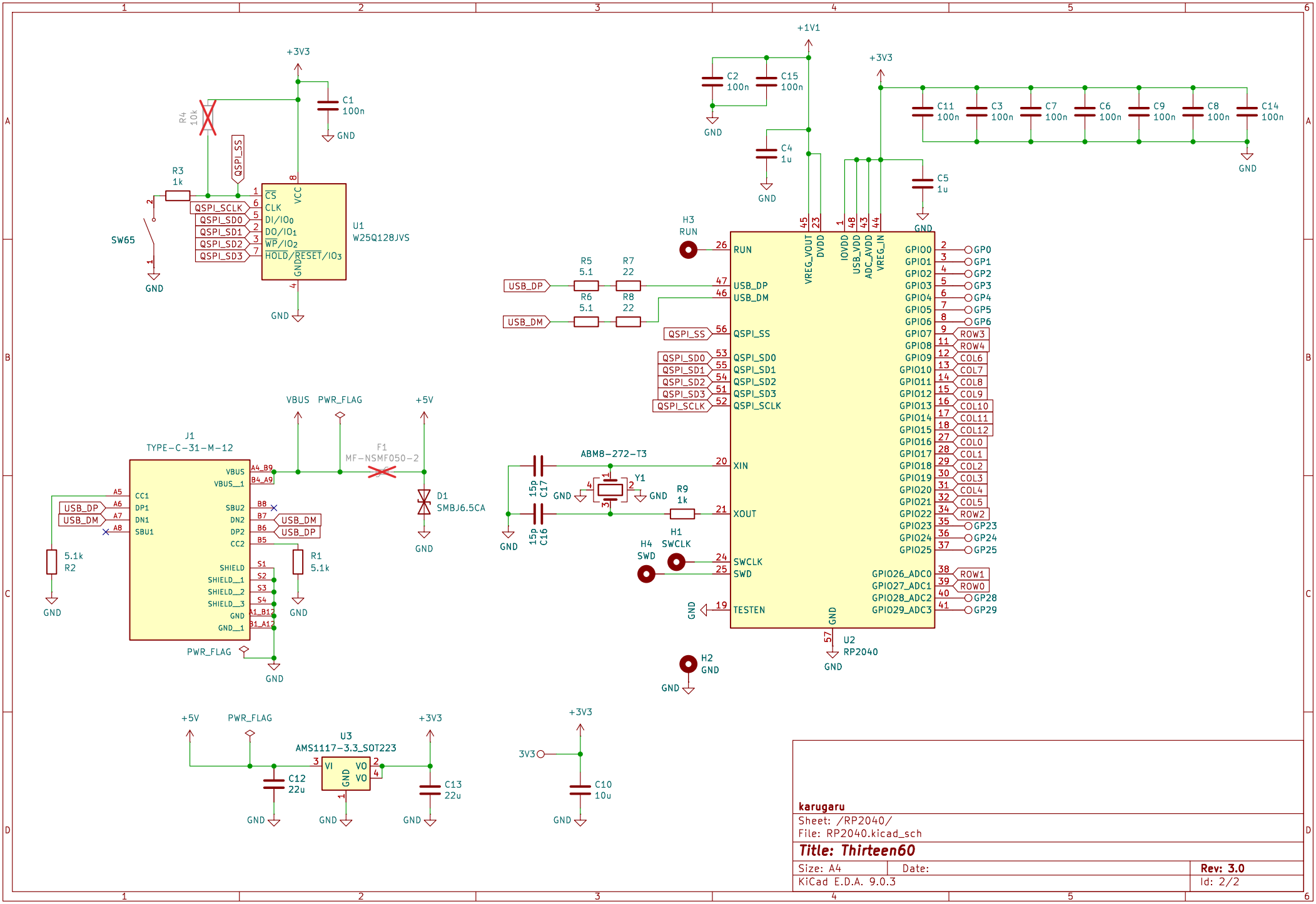

karugaru

Sheet: /RP2040/

File: RP2040.kicad_sch

Title: Thirteen60

Size: A4	Date:	Rev: 3.0
KiCad E.D.A. 9.0.3		Id: 2/2