JCM632-AN1M

Games: XK-401, XK-402, XK-403, XK-404, XK-405
All games use 16Mbit ROM, 64Kbit SRAM,
and set PB1/PB3 to pullup.

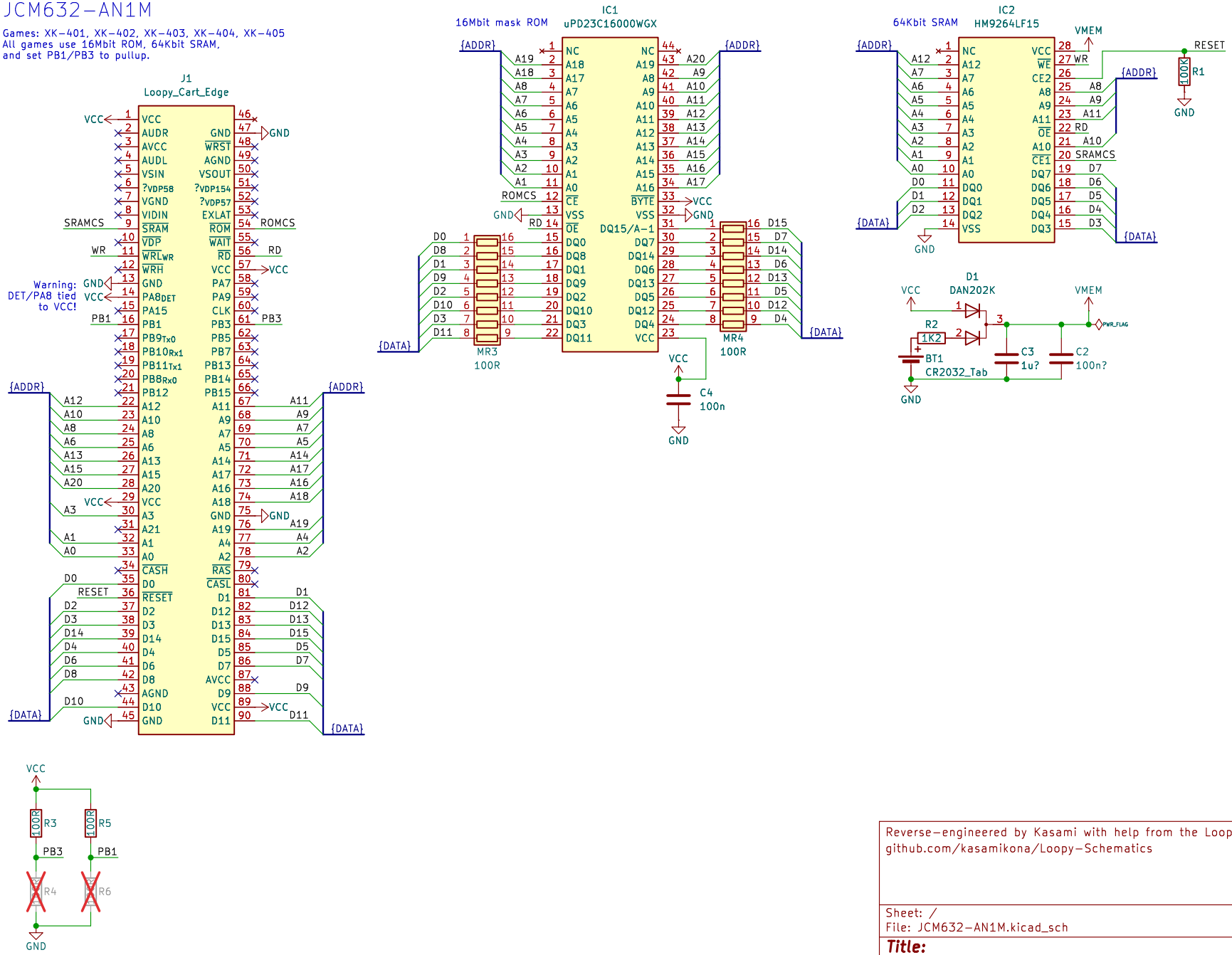

Reverse-engineered by Kasami with help from the Loopy community
github.com/kasamikona/Loopy-Schematics

Sheet: /
File: JCM632-AN1M.kicad_sch

Title:

Size: A4	Date:	Rev:
KiCad E.D.A. 9.0.6		Id: 1/1