Z544-1
A240427-1 (REV A)
A240427B-1 (REV B)

Games:
XK-501 = rev A, ROM 16+0Mbit
XK-503 = rev B, ROM 16+8Mbit
XK-504 = rev B, ROM 16+8Mbit

All games use dual ROM config and 64Kbit SRAM.

Only XK-501 has expansion audio.

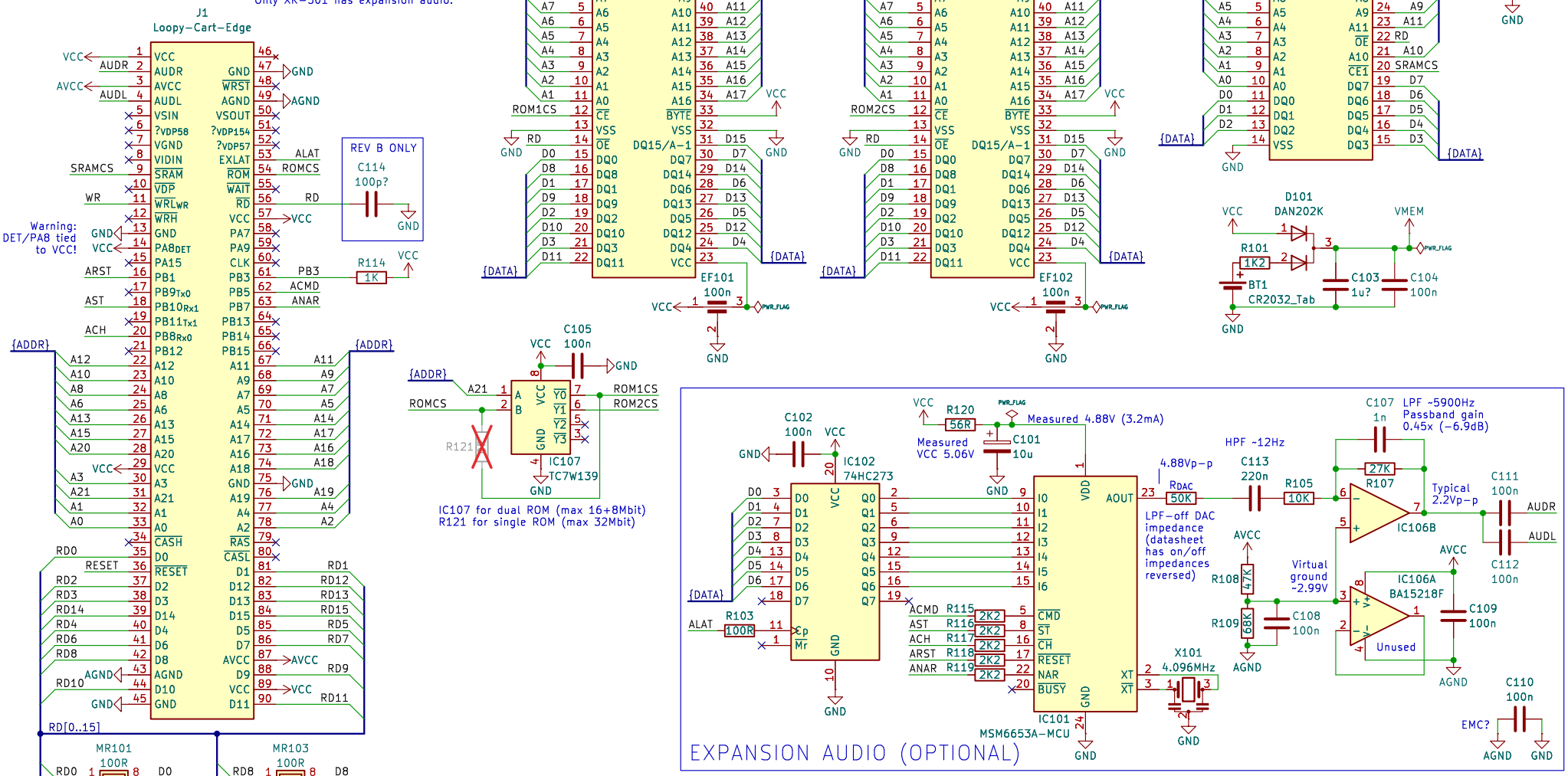

Reverse-engineered by Kasami with help from the Loopy community
github.com/kasamikona/Loopy-Schematics

Sheet: /
File: Z544-1.kicad_sch

Title:

Size: A4	Date:	Rev:
KiCad E.D.A. 9.0.6		Id: 1/1