Z545-1

Games:
XK-502: PB15=open, DET=short
XK-701: PB15=pullup, DET=PB1

Both games use 16Mbit ROM, 256Kbit SRAM, and set PB1/PB3 to pullup.

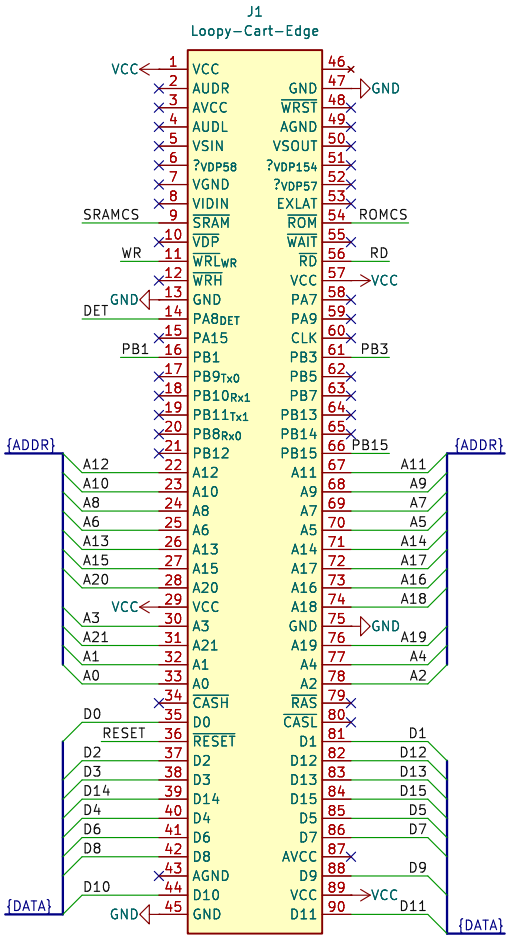

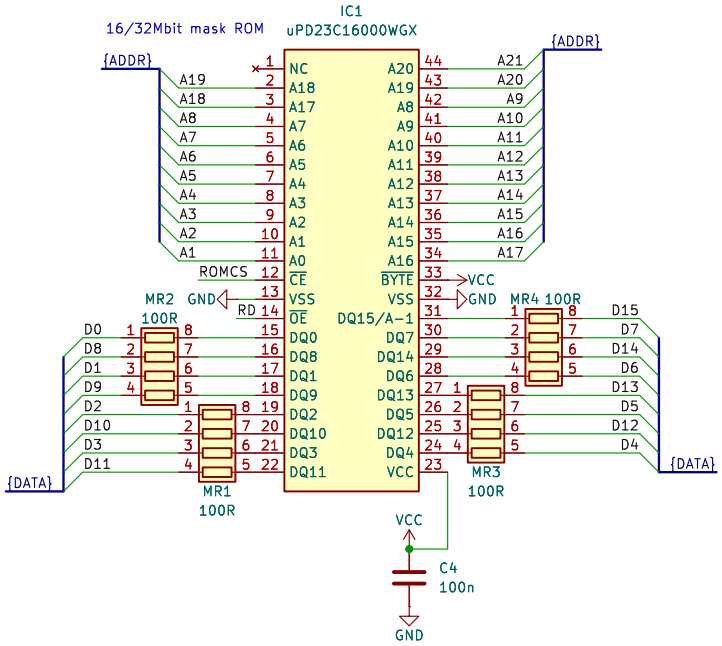

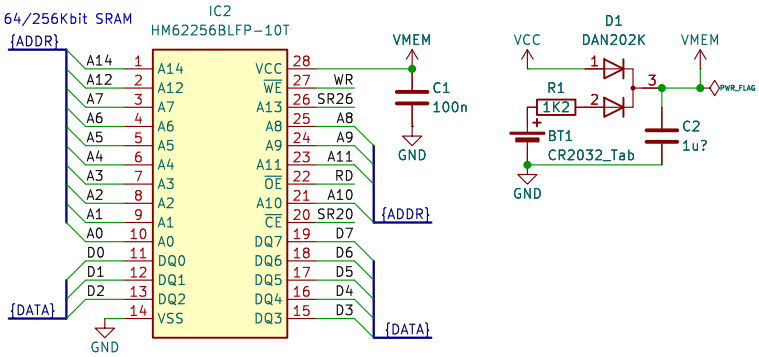

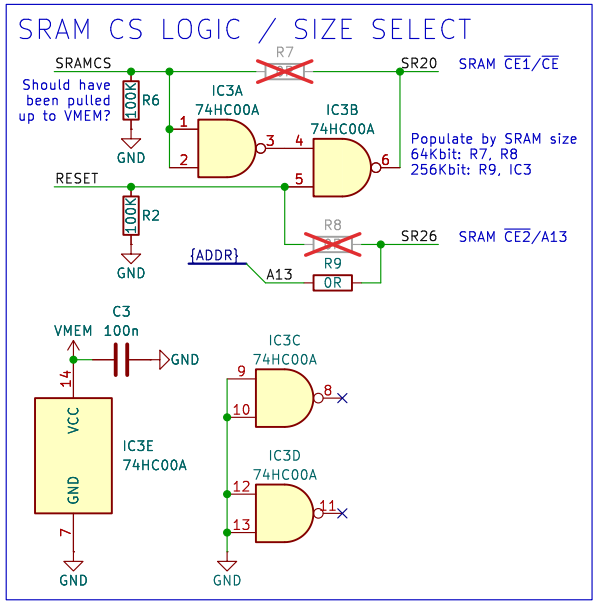

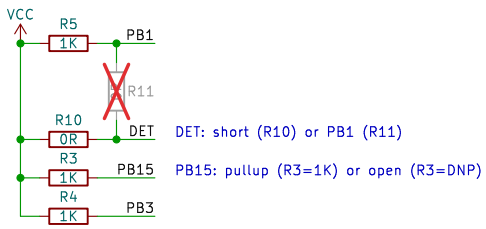

Reverse-engineered by Kasami with help from the Loopy community
github.com/kasamikona/Loopy-Schematics

Sheet: /
File: Z545-1.kicad_sch

Title:

Size: A4	Date:	Rev:
KiCad E.D.A. 9.0.6		Id: 1/1