Casio Loopy Power/AV Board
JCM631-MA2M (rev C)

Power Input Filtering

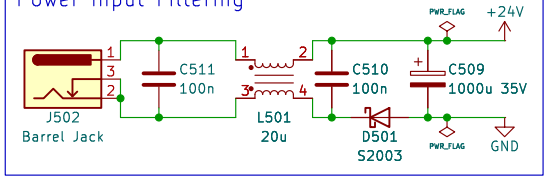

Mechanical

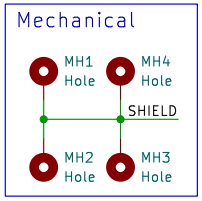

Switching Regulator

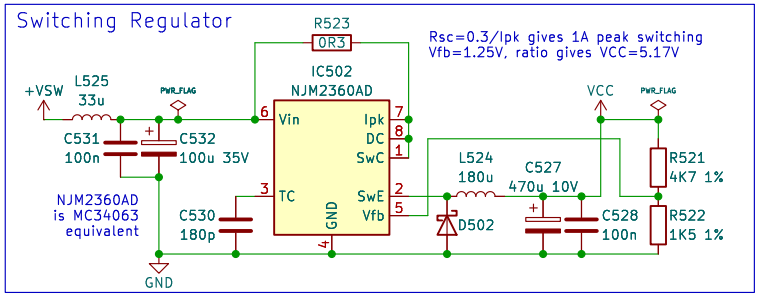

Power Distribution & Filtering

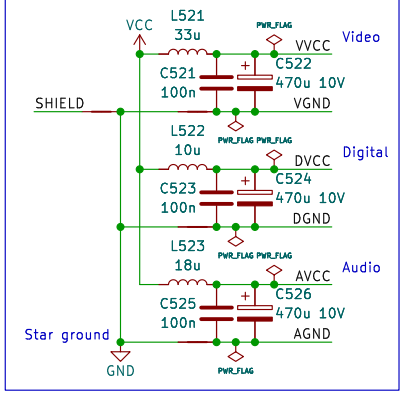

Mainboard Connections

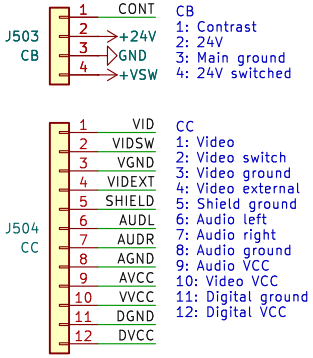

Video Switching & AV Output

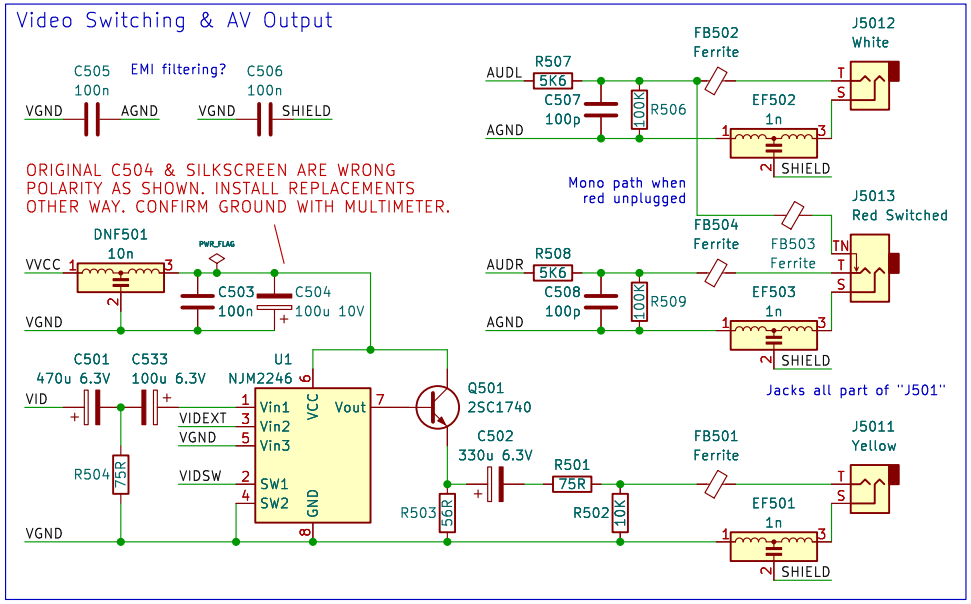

Printer Contrast

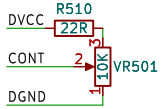

Pot case to SHIELD

Possible mods:

- To reduce VCC from 5.17V to 5.0V:
  Change R521 to 4K5 or put 100K in parallel

Reverse-engineered by Kasami with help from the Loopy community
github.com/kasamikona/Loopy-Schematics

Sheet: /		
File: Power-AV-Board.kicad_sch		
Title:		
Size: A4	Date:	**Rev:**
KiCad E.D.A. 9.0.6		Id: 1/1