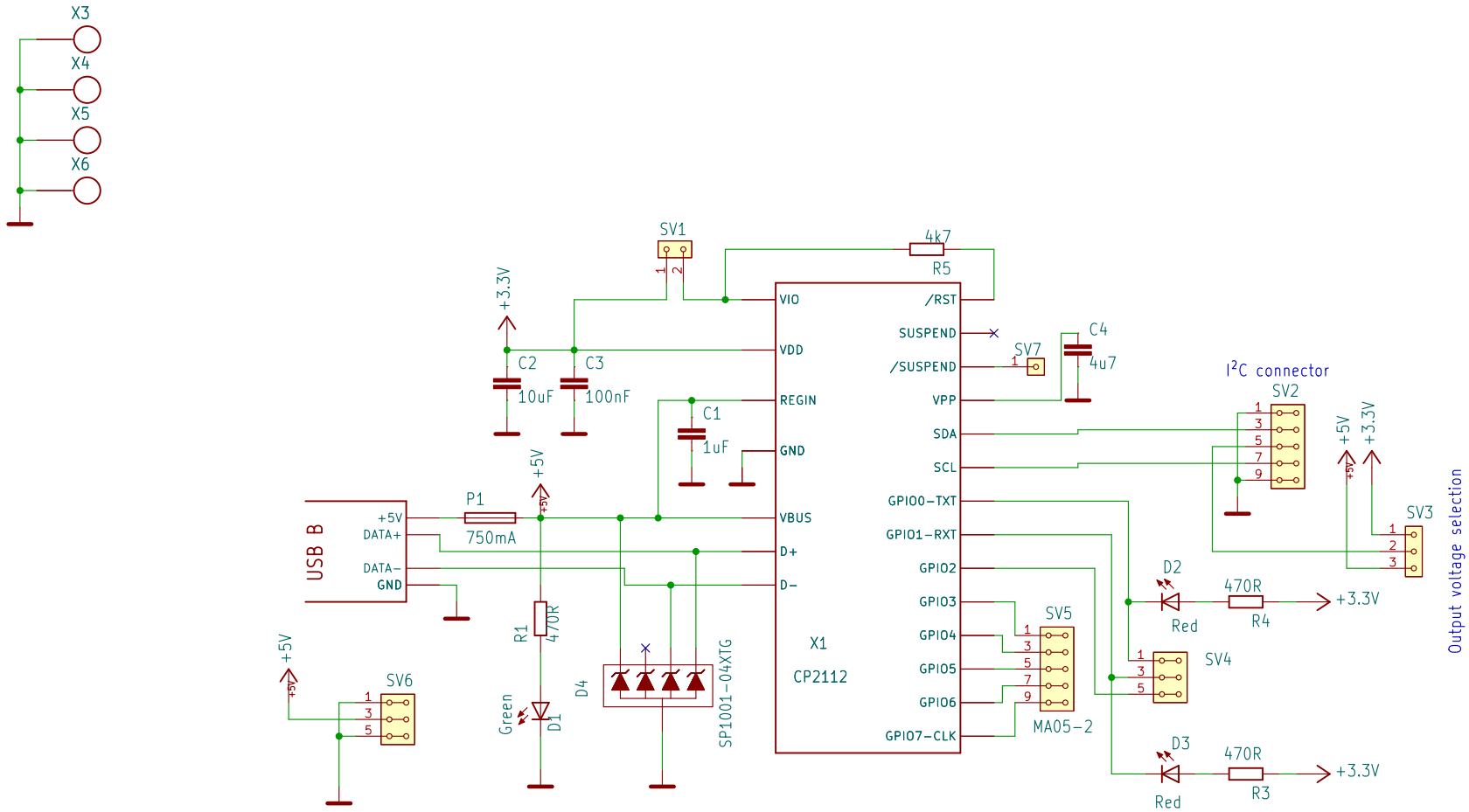

Title: USBI2C01

USB to I²C master adapter
with Linux kernel support

Author: MLAB.cz

Size: A4	Page: 1/1	Date: 2023-02-13

mlab