CHARACTERISTICS			
Item	Wing	Horizontal Tail	Vertical Tail
Airfoil Type	WHITCOMB INTEGRAL SUPERCRITICAL	NACA 0012	NACA 0012
Area (sq ft)	1309	282.2	173.4
Aspect Ratio	9.1	5	2.5
SweepBack (Deg)	31		
Dihedral (Deg)	6	10	--
T/C	0.150		
Tail Volume Coeff.	--	1.10	0.08

PAYLOAD CAPACITY			
Passengers			
Class	# of Abreast	Pitch	# of Seats
First	4	40"	12
Economy	6	32"	138
Cargo Container LD-W			
Location	Volume (sq ft)		# of Containers
Forward	779.4		9
Backward	346.6		4

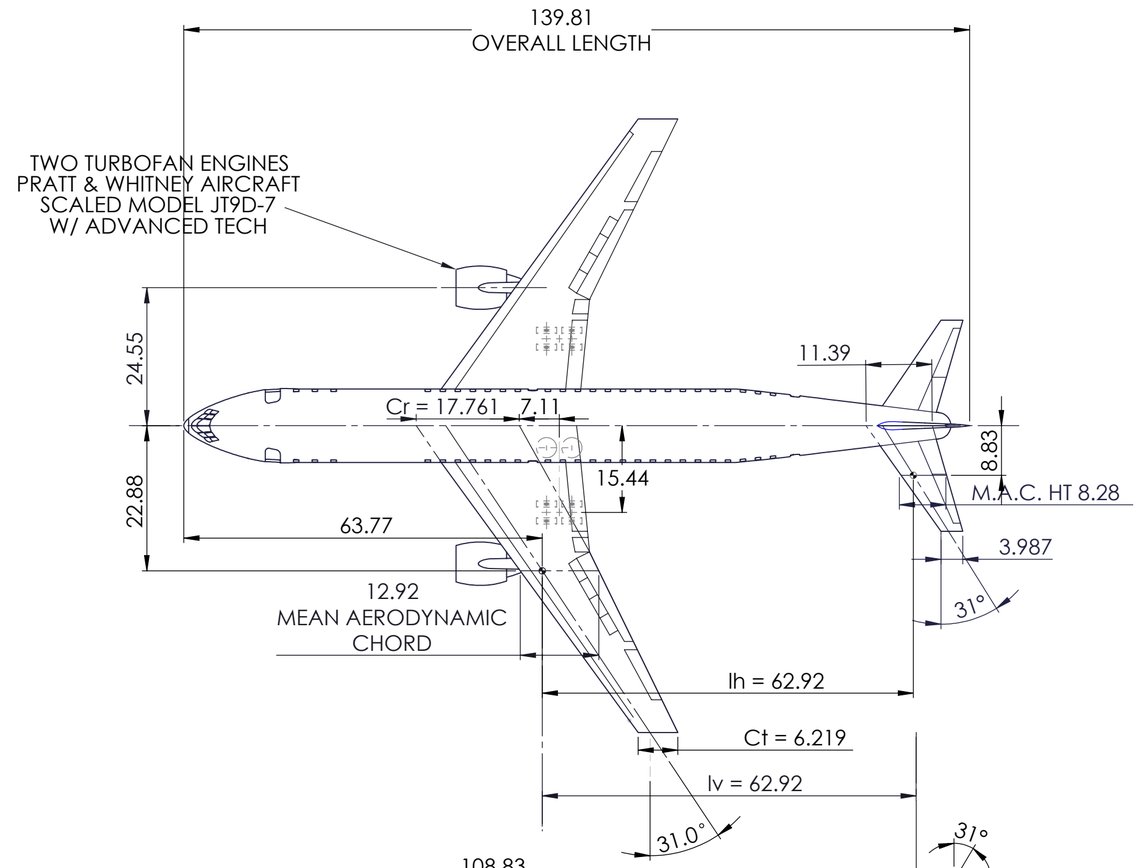

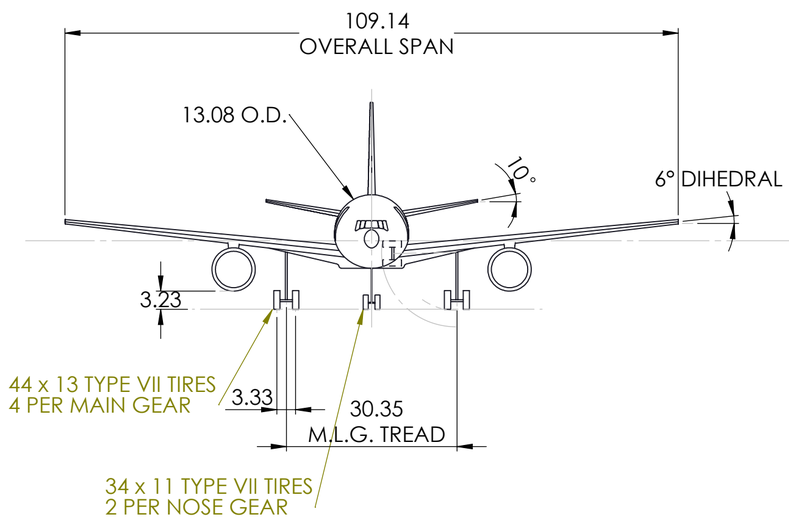

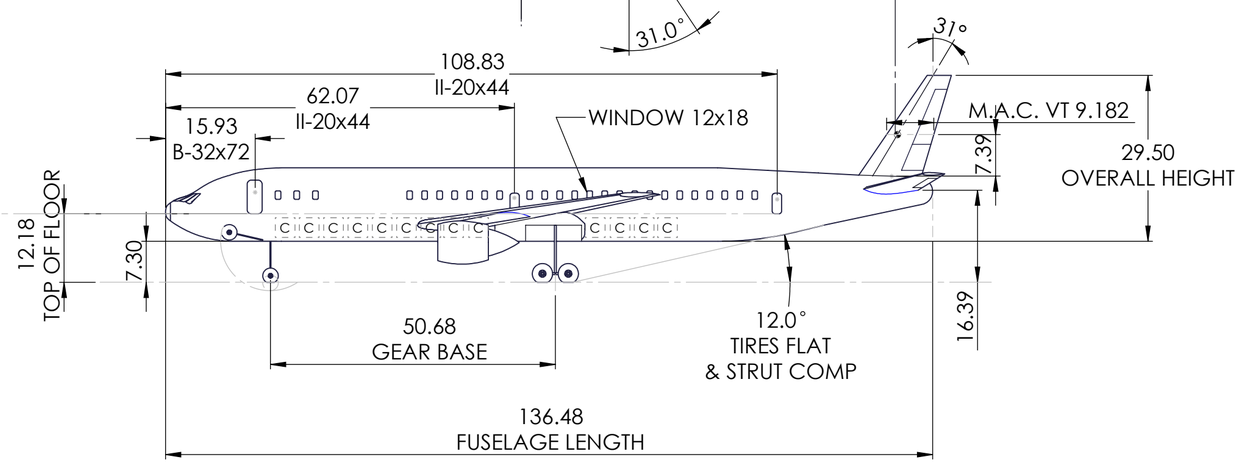

PROPRIETARY AND CONFIDENTIAL

THE INFORMATION CONTAINED IN THIS DRAWING IS THE SOLE PROPERTY OF <INSERT COMPANY NAME HERE>. ANY REPRODUCTION IN PART OR AS A WHOLE WITHOUT THE WRITTEN PERMISSION OF <INSERT COMPANY NAME HERE> IS PROHIBITED.

NEXT ASSY | USED ON

APPLICATION

UNLESS OTHERWISE SPECIFIED:

DIMENSIONS ARE IN FEET
TOLERANCES:
FRACTIONAL ±
ANGULAR: MACH ± BEND ±
TWO PLACE DECIMAL ±
THREE PLACE DECIMAL ±

INTERPRET GEOMETRIC TOLERANCING PER:

MATERIAL

FINISH

DO NOT SCALE DRAWING

	NAME	DATE
DRAWN		
CHECKED		
ENG APPR.		
MFG APPR.		
Q.A.		

COMMENTS:

TITLE: 150 PAX 3 VIEW

SIZE C | DWG. NO. 150_3VIEW | REV

SCALE: 1:250 WEIGHT: SHEET 1 OF 1