ME446/SE422/ECE489 Robot Dynamics and Control

Spring 2026 Justin Yim **Homework 10**

Homework is due on Gradescope by 11:59 pm. In your homework submission, clearly demonstrate how you obtained your final answer including all derivations and any MATLAB code you wrote. Include the names of anyone you worked with and cite any resources, including AI tools, you used.

1. Final simulation

This homework goes through a simplified simulation of all the tasks you will implement for the final project:

(a) Insert a peg into a hole

(b) Slide through a narrow slot

(c) Apply a desired force at a point

In each of the following problems, you will implement one of the above tasks and in the last part you will put them all together. For the combination of tasks your objectives are:

(a) Complete the tasks as fast as you can while achieving the below requirements:

(b) Approach the desired points p_i to within ± 5 mm.

(c) Ensure that contact forces are always below 20 N in all directions.

Missing desired points by more than ± 5 mm or exceeding contact forces of 20 N in any direction will be penalized for each occurrence. Modify the `fcn_controller.m` file and write any helper functions you need, but do not modify `MAIN.m` outside of the specified section at the top or any of the other provided starter code besides `fcn_controller.m`.

On the robot's end effector is a rod that remains always vertical as you have seen in the lab. Soft contact models approximate its contact forces with all objects in the world. The tasks in this homework are defined **relative to point** p at the bottom of the rod (a distance d ahead of and $h/2$ below the wrist) and NOT the wrist position p_w as was the case in previous homework. Note that **the rod offset** d **and** $h/2$ **may be slightly different** from those of the real robot.

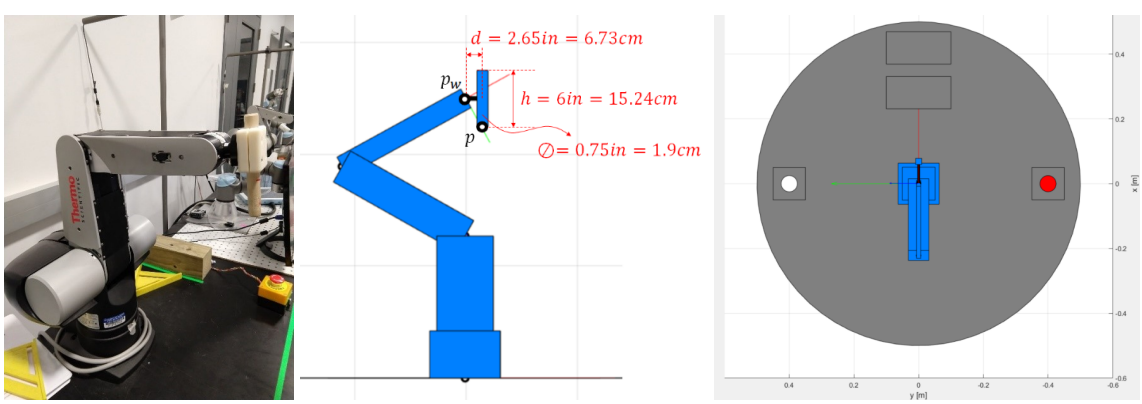

Figure 1: CRS robot arm, simulation dimensions, and environment

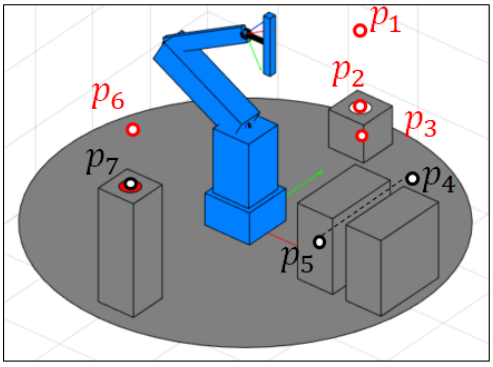

$$p_1 = \begin{bmatrix} 0 \\ 0.4 \\ 0.35 \end{bmatrix} \quad p_2 = \begin{bmatrix} 0 \\ 0.4 \\ 0.1 \end{bmatrix} \quad p_3 = \begin{bmatrix} 0 \\ 0.4 \\ 0.05 \end{bmatrix}$$

$$p_4 = \begin{bmatrix} 0.35 \\ 0.15 \\ 0.15 \end{bmatrix} \quad p_5 = \begin{bmatrix} 0.35 \\ -0.15 \\ 0.15 \end{bmatrix}$$

$$p_6 = \begin{bmatrix} 0 \\ -0.4 \\ 0.4 \end{bmatrix} \quad p_7 = \begin{bmatrix} 0 \\ -0.4 \\ 0.3 \end{bmatrix}$$

Figure 2: Waypoints

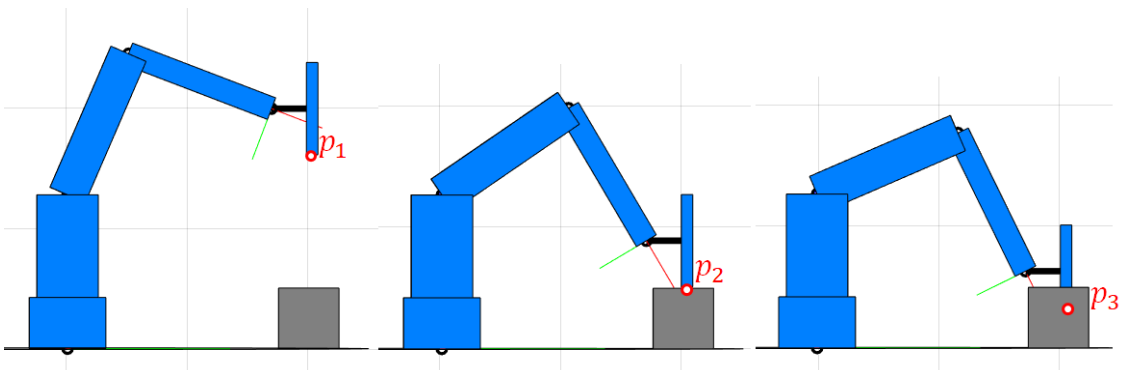

Your controller will be given the estimated parameters of the robot, but not the actual values used by the simulated dynamics.

(a) **Peg insertion**: starting from initial position $q_0 = [0; -2.63; 2.13]$ and zero initial velocity, the robot end effector must go to waypoint p_1, then approach the surface of the hole at waypoint p_2, insert the peg into the hole to reach waypoint p_3, and finally extract the peg to point p_2 again. During the entire motion, the robot must keep forces below the overall force limits and must get within the specified distance thresholds. Show your trajectory and force plots (figures 3 and 4). (30 points)

(b) **Narrow slot**: starting from waypoint p_4, the robot end effector must pass through the narrow slot of width 3.81 cm to reach point p_5. The robot end effector x and z coordinates must remain within 5 mm of the p_4 and p_5 x and z coordinates for the entire motion while all forces must remain within the limits. Show your trajectory and force plots (figures 3 and 4). (30 points)

(c) **Force**: starting from waypoint p_6 the end effector must push down on the button at point p_7 with force $F_{des} = 10 \pm 1$ N for **no less than** two seconds, then return to the initial configuration $q_0 = [0; -2.63; 2.13]$. Report your force plot (figure 3) to show that the steady-state vertical contact force is very close to F_{des}. (30 points)

(d) **Putting it all together**: starting from initial position $q_0 = [0; -2.63; 2.13]$ and zero initial velocity, move among each task and complete all three in order in one continuous simulation. Feel free to change the simulation duration as required to fit your motion into the simulation period. Try to complete the objectives as quickly as you can – full points will be awarded for completing the entire trajectory in less than 12 seconds. At the end, you may set the input `record` (the final input) to function `animateRobot.m` to 1 in order to save a video file called "CRS_Robot.avi". Report

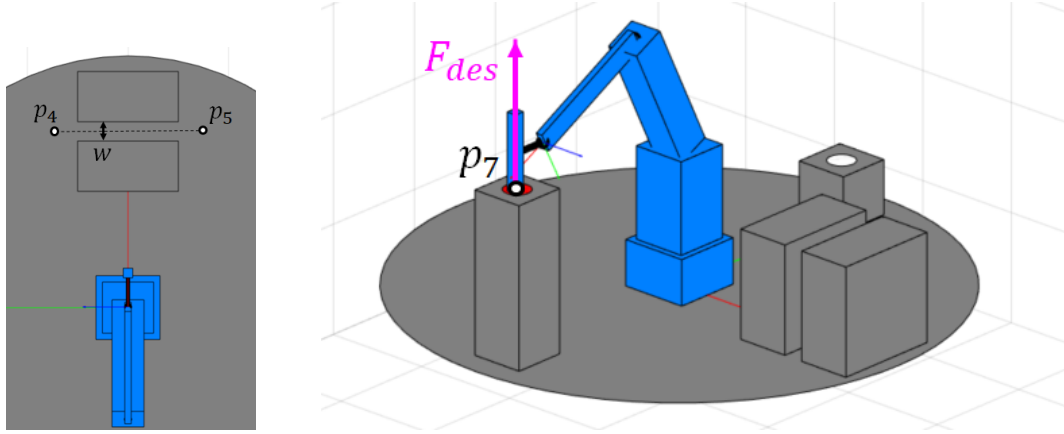

your plots of end effector trajectory over time and force over time (figures 3 and 4). Turn in your `fcn_controller.m` code and any additional helper functions you wrote. (10 points)

Approximately how many hours did it take to complete this homework assignment?