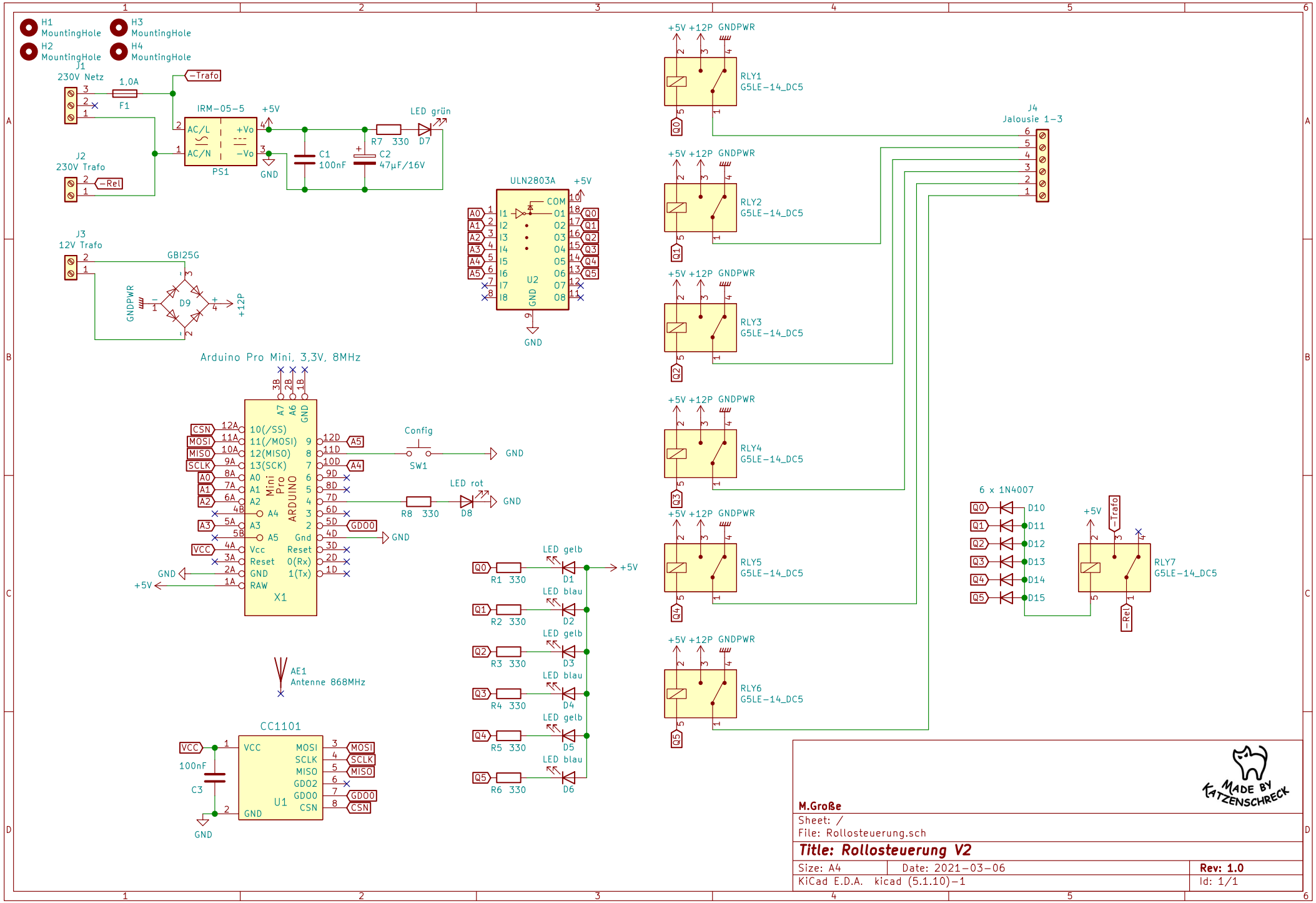
H1 MountingHole
H2 MountingHole
H3 MountingHole
H4 MountingHole
J1 230V Netz
1,0A F1
-Trafo
IRM-05-5 PS1
AC/L AC/N +Vo -Vo
+5V
GND
C1 100nF
C2 47µF/16V
R7 330
LED grün D7
J2 230V Trafo
-Rel
J3 12V Trafo
GBI25G D9
GNDPWR
+12P
ULN2803A U2
COM I1 I2 I3 I4 I5 I6 I7 I8 O1 O2 O3 O4 O5 O6 O7 O8
A0 A1 A2 A3 A4 A5
Q0 Q1 Q2 Q3 Q4 Q5
Arduino Pro Mini, 3,3V, 8MHz
X1
10(/SS) 11(/MOSI) 12(MISO) 13(SCK) A0 A1 A2 A3 A4 A5 Vcc Reset GND RAW
12D 11D 10D 9D 8D 7D 6D 5D 4D 3D 2D 1D
GDO0
Reset 0(Rx) 1(Tx)
CSN MOSI MISO SCLK VCC
Config SW1
LED rot D8
R8 330
AE1 Antenne 868MHz
CC1101 U1
VCC GND MOSI SCLK MISO GDO2 GDO0 CSN
100nF C3
LED gelb D1 D3 D5
LED blau D2 D4 D6
R1 330 R2 330 R3 330 R4 330 R5 330 R6 330
RLY1 G5LE-14_DC5
RLY2 G5LE-14_DC5
RLY3 G5LE-14_DC5
RLY4 G5LE-14_DC5
RLY5 G5LE-14_DC5
RLY6 G5LE-14_DC5
RLY7 G5LE-14_DC5
J4 Jalousie 1-3
6 x 1N4007
D10 D11 D12 D13 D14 D15
MADE BY KATZENSCHRECK
M.Große
Sheet: /
File: Rollosteuerung.sch
Title: Rollosteuerung V2
Size: A4
Date: 2021-03-06
Rev: 1.0
KiCad E.D.A. kicad (5.1.10)-1
Id: 1/1