Shared Memory Architectures

Chris Kauffman

Last Updated:
Tue Mar 24 01:01:01 PM EDT 2026

Logistics

This Week

- Finish Parallel Sorting
- Shared Memory Architecture Theory + Practicalities
- Cache Performance Effects
- Next: Empirical Performance Analysis
- Later: PThreads + OpenMP for shared memory machines

Reading

- Grama 2.4.1 (PRAM), 2.4.6 (cache)
- Gram 7.1-9 (PThreads)
- Grama 7.10 (OpenMP)
- OpenMP Tutorial at Laurence Livermore

Upcoming

- Mini-Exam 2 on Thu 26-Mar
- A3 up later this week, Focus on performance analysis, Comparatively short

PRAM: Parallel Random Access *Machine*, Grama Ch 2.4.1

RAM: Random Access *Machine*

- An unfortunate name as every other use of "RAM" is Random Access *Memory*
- PRAM is a Single CPU attached to Random Access Memory
- Simplistic model for a real machine: CPU reads memory, performs operations in registers, writes to memory, repeats

PRAM: Parallel Extension to RAM

- Simplified theoretical model for a real parallel machine
- Multiple CPUs attached to memory, share clock but can execute different instructions
- Must clarify behavior in a PRAM that is not possible in single CPU situation: how is **simultaneous memory access** handled?

Theoretical Flavors of PRAM

Exclusive-Read, Exclusive-Write (EREW) PRAM

Multiple CPUs cannot touch same memory at all. No parallelism possible for reads / writes of the same memory location.

Concurrent-Read, Exclusive-Write (CREW) PRAM

Multiple CPUs may read same memory location at same time. Writes to same location must be resolved.

Exclusive-Read, Concurrent-Write (ERCW) PRAM

Multiple write accesses are allowed to a memory location, but multiple read accesses are serialized. (This is just weird)

Concurrent-Read, Concurrent-Write (CRCW) PRAM

Simultaenous Read AND Write of the same memory location: the most "powerful" PRAM model for some definition of "power".
Q: What else must be specified for the xxCW models?

Resolution Schemes for Concurrent Reads/Writes

A: How concurrent writes resolve.

- **Common**: concurrent writes are allowed if all the values that the processors are attempting to write are identical.
- **Arbitrary:** an arbitrary processor is allowed to proceed with the write operation and the rest fail.
- **Priority:** procs are organized in a predefined priority list; proc with the highest priority writes its value while others fail.
- **Sum:** the sum of all the quantities is written

Above categories do not resolve concurrent read+write such as:

```
MEM[#1024] is 10
P0: read   MEM[#1024] to REG1
P1: write  20         to MEM[#1024]
```

Proper treatments of PRAM specify results for this such as

- All Reads resolve first, then Writes resolve OR
- Concurrent Reads/Writes occur in arbitrary order OR
- etc. *Your imagination is the limit...*

However, we'll proceed with more practical matters

Pros and Cons of PRAM

Why the PRAM Model?

- It's simple
- Much literature devoted to studying benefits of algorithms under different variants *(e.g. Parallel Array Sum with CRCW + summing on concurrent write)*
- Has significant theoretical importance

Why Not PRAM

- No real machines currently implement any PRAM models
- Some real machines (GPUs) have qualities similar to PRAM but many practical divergences from it
- Conclusions one might draw about "good" algorithms is skewed *(e.g. multi-core machines do NOT behave as a CRCW-summing machine; far from it)*

Exercise: Recall the Memory Cache

- Parallel programs are driven towards performance
- Optimize serial performance first: requires understanding of the memory hierarchy

Questions

From your computer architecture experience...

- Describe a **memory cache** and why most CPUs have several layers of them
- Give an example of "strange" cache effects where similar algorithms have very different performance

Diagrams of Memory Interface and Cache Levels

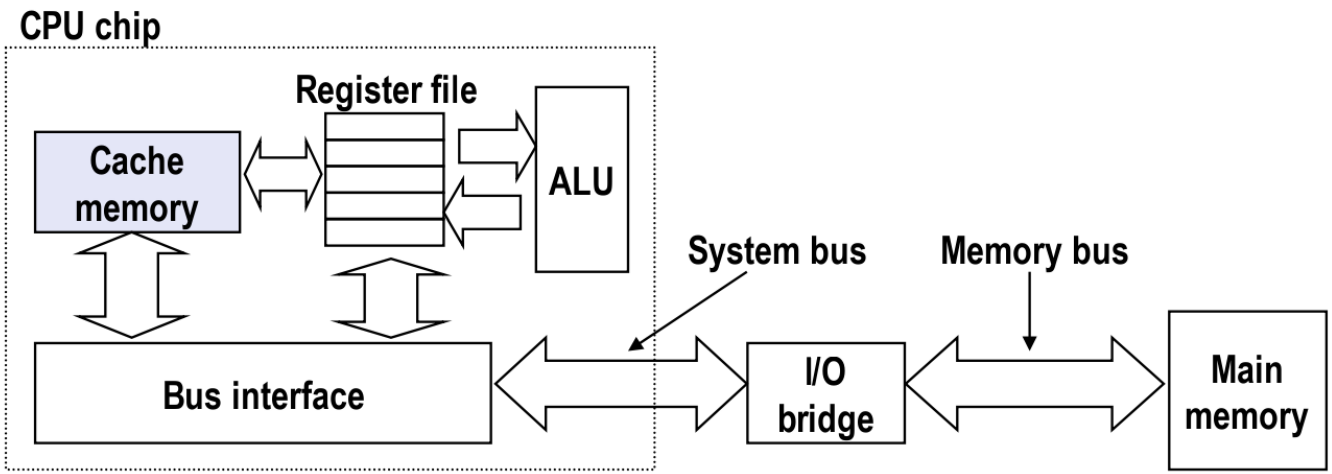

Source: Bryant/O'Hallaron CS:APP 3rd Ed.

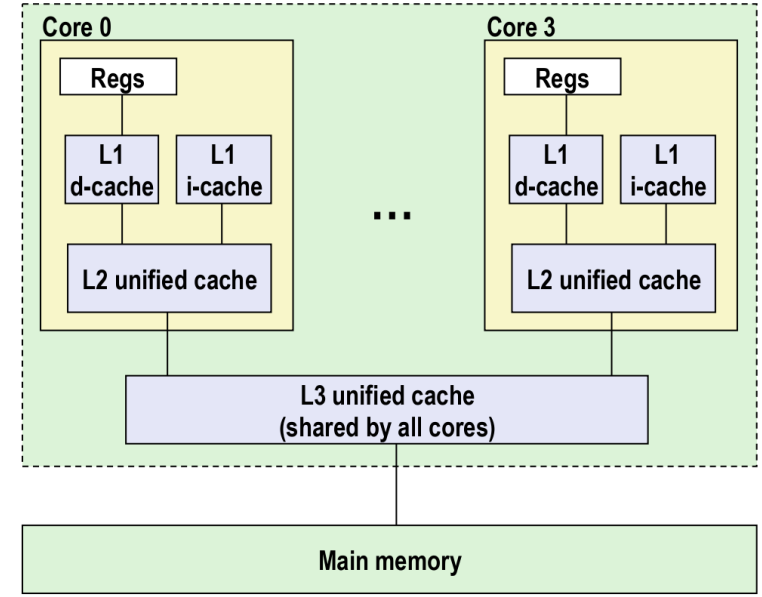

Bryant and O'Hallaron, Computer Systems: A Programmer's Perspective, Third Edition

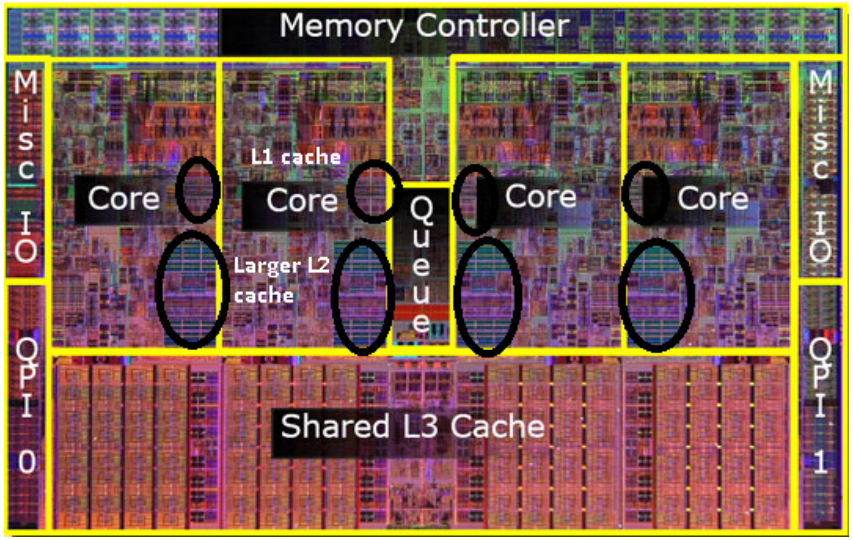

Source: SO "Where exactly L1, L2 and L3 Caches located in computer?"

Numbers Everyone (in Computing) Should Know

Edited Excerpt of Jeff Dean's talk on data centers.

Operation	Time (ns)
Register	0.0
L1 cache reference	0.5
Branch mispredict	5
L2 cache reference	7
Mutex lock/unlock	100
Main memory reference	100
Compress 1K bytes with Zippy	10,000
Send 2K bytes over 1 Gbps network	20,000
Read 1 MB sequentially from memory	250,000
Round trip within same datacenter	500,000
Disk seek	10,000,000
Read 1 MB sequentially from network	10,000,000
Read 1 MB sequentially from disk	30,000,000
Send packet CA->Netherlands->CA	150,000,000

Numbers are likely out of date now but scales are worth knowing and explain why Cache is useful

Matrix Summing Examples

Sum R

```
double X[N][N]; // N by N mat
...
sum = 0;
for(i=0; i<N; i++){
  for(j=0; j<N; j++){
    sum += X[i][j]
  }
}
```

Sum C

```
double X[N][N]; // N by N mat
...
sum = 0;
for(j=0; j<N; j++){
  for(i=0; i<N; i++){
    sum += X[i][j]
  }
}
```

- What's the Big O complexity of each?
- What happens with cache?
- Will one be faster than the other?

Cache Affects Performance

As measured by hardware counters using Linux's `perf` on

```
>> lscpu
model name : Intel(R) Core(TM) i5-8250U CPU @ 1.60GHI
  Thread(s) per core:      2
  Core(s) per socket:      4
  Socket(s):               1
Caches (sum of all):
  L1d:                       128 KiB (4 instances)
  L1i:                       128 KiB (4 instances)
  L2:                        1 MiB (4 instances)
  L3:                        6 MiB (1 instance)
>> perf stat $opts ./matrix_timing 8000 4000 row
>> perf stat $opts ./matrix_timing 8000 4000 col
```

Measurement	Sum Row	Sum Col
Big-O Complexity	$O(N^2)$	$O(N^2)$
cycles	135,161,407	372,203,024
instructions	417,889,646	404,821,793
L1-dcache-loads	56,413,529	61,990,626
L1-dcache-load-misses	3,843,602	39,281,370
L1-dcache-miss-percent	6.8%	63.4%
Runtime (seconds)	0.019	0.086

Cache Issues in Shared Memory Machines

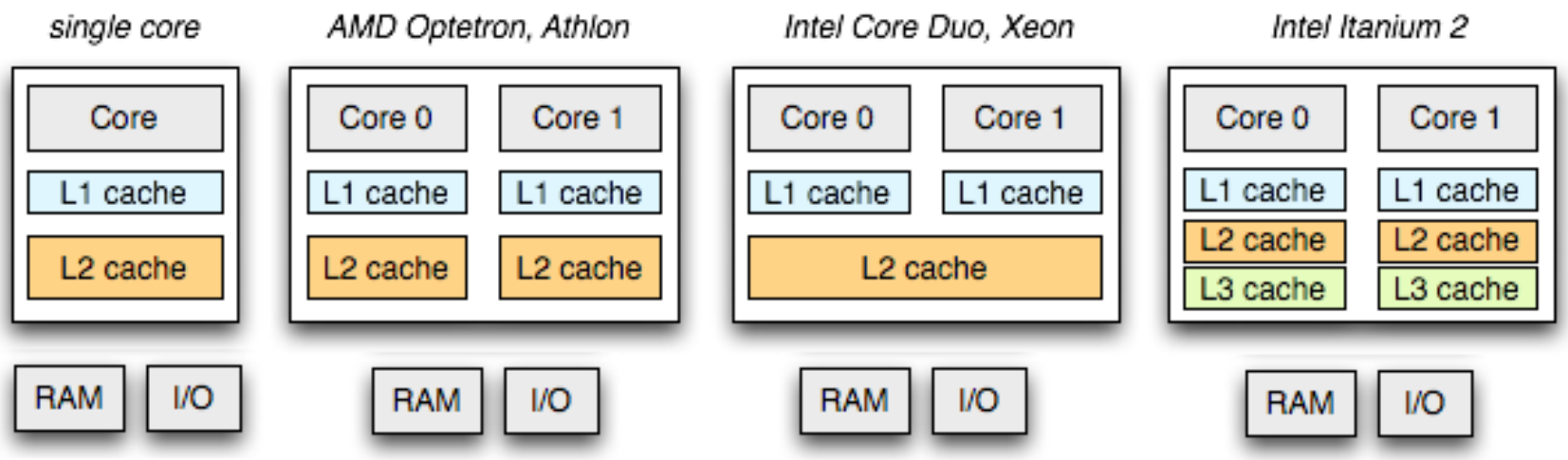

Source: Multi-core, Threads & Message Passing by Ilya Grigorik

Consider the following sequence of operations:

```
                                // MEM[#1024] has value 5
PE0: read R1 MEM[#1024]          // slow, populates cache
PE0: read R2 MEM[#1024]          // fast, from cache
PE0: ADD R1 R1 R2                // R1 is 10
PE0: write R1 MEM[#1024]         // cache dirty, MEM[#1024] unchanged
  ## a short time later ##
PE1: read R3 MEM[#1024]          // read 5 or 10? Depends on cache coherence..
```

Illustrates **Cache Coherence** Problem: how do multiple PEs maintain the illusion of a single block of shared memory?

Cache Coherence Protocols

Grama 2.4.6 offers two theoretical protocols to maintain Coherence

- **Invalidate**: shared memory written by one PE is marked as invalid in cache of others
- **Update**: shared memory written by one PE is updated in other PEs

Both require hardware to **snoop** writes to memory by other PEs,

- Introduces complexity into hardware
- Potential bottlenecks for programs that most be avoided
- BUT without a Cache Coherence scheme, programs with multiple PEs will have unpredictable behavior when sharing data

Invalidate and Update Protocol Diagrams

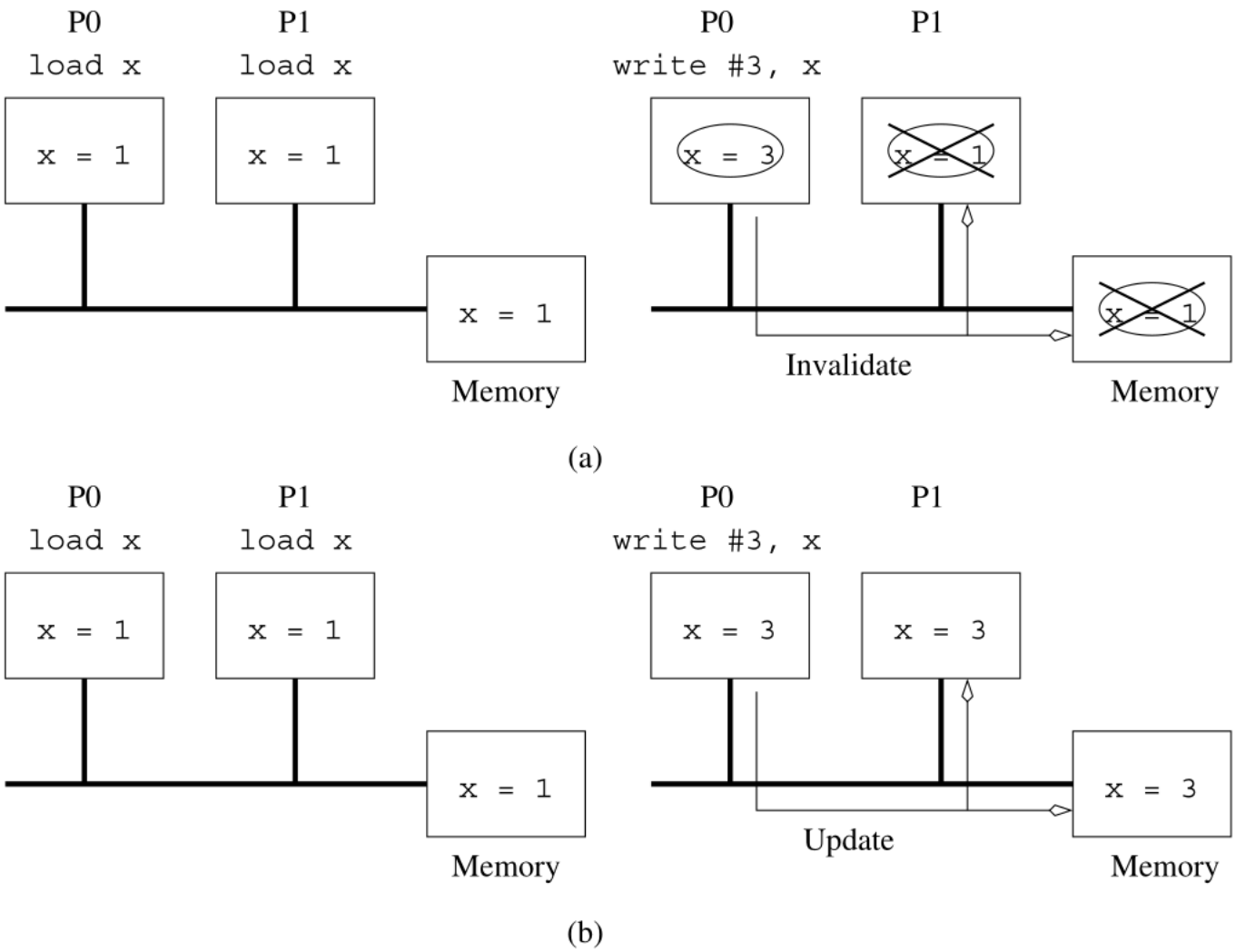

Figure 2.21 Cache coherence in multiprocessor systems: (a) Invalidate protocol; (b) Update protocol for shared variables.

Cache Coherence: Simple Three-State Model

Shared (S) valid for reads, write changes state

Dirty (D) written by me, must eventually flush to main memory

Invalid (I) another proc altered it, trigger flush + reload on reading

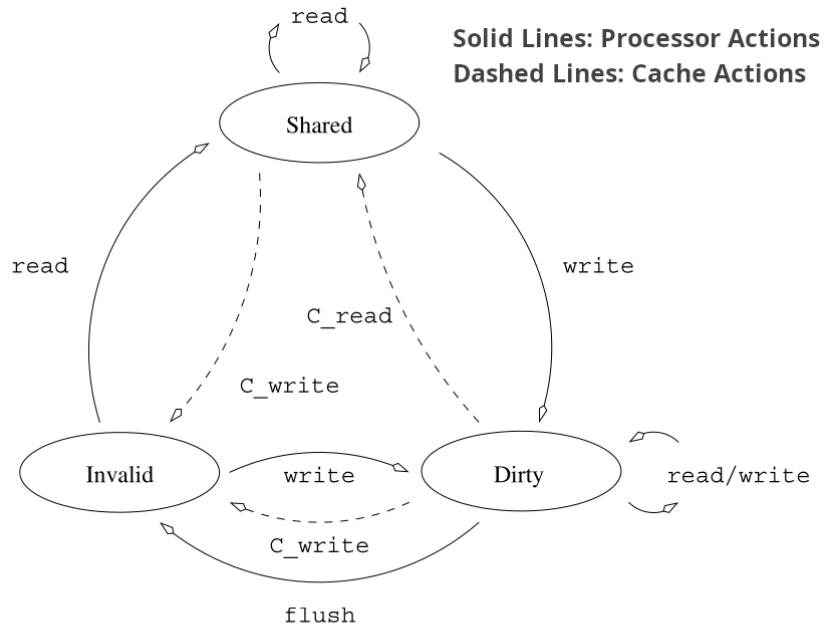

Figure 2.22 State diagram of a simple three-state coherence protocol.

- Each Unit of memory in Cache and DRAM have a `S / D / I` state, often associated with Cache Lines
- Actions by PE0 affect cache lines on PE1: PE0 Writes to `x`, PE1's copy now Invalid
- NOTE: This is a **simplified scheme** with actual hardware implementations often having several more states

Grama Demonstration of Cache Coherence

Time ↓

Instruction at Processor 0	Instruction at Processor 1	Variables and their states at Processor 0	Variables and their states at Processor 1	Variables and their states in Global mem.
				x = 5, D y = 12, D
read x		x = 5, S		x = 5, S
	read y		y = 12, S	y = 12, S
x = x + 1		x = 6, D		x = 5, I
	y = y + 1		y = 13, D	y = 12, I
read y		y = 13, S	y = 13, S	y = 13, S
	read x	x = 6, S	x = 6, S	x = 6, S
x = x + y		x = 19, D	x = 6, I	x = 6, I
	y = x + y	y = 13, I	y = 19, D	y = 13, I
x = x + 1		x = 20, D		x = 6, I
	y = y + 1		y = 20, D	y = 13, I

Figure 2.23 Example of parallel program execution with the simple three-state coherence protocol discussed in Section 2.4.6.

"Corrected" Demo of Cache Coherence

Below is an alternate version of Fig 2.23 of Grama where code like `x = x + y` assumes a `read x` and `read y` to ensure the most current value of both variables are used.

	PE0 Code	PE0 CACHE	PE1 Code	PE1 CACHE	Global Mem	Notes
					x = 5, S	
					y = 12, S	
1	read x	x = 5, S				
2			read y	y = 12, S		
3	x = x + 1	x = 6, D			x = 5, I	
4			y = y + 1	y = 13, D	y = 12, I	
5	read y	y = 13, S			y = 13, S	PE1: flush y
6			read x	x = 6, S	x = 6, S	PE0: flush x
7	x = x + y	x = 19, D		x = 6, I	x = 6, I	PE1: invalid x
8		x = 19, S	y = x + y	x = 19, S	x = 19, S	PE0: flush x
		y = 13, I		y = 32, D	y = 13, I	PE0: invalid y
9	x = x + 1	x = 20, D		x = 19, I	x = 19, I	PE1: invalid x
10			y = y + 1	y = 33, D		

MESI: Cache Coherence System in Actual Hardware

Each cache block is in one of 4 states

1. Modified (M): Cache line is present and "dirty" due to changes by this PE; required to write the data back to main memory at some time in the future before any other read of the corresponding data. Write-back changes the line to the Shared state(S).
2. Exclusive (E): Cache line is present only in the current cache and is clean, matches main memory. It may be changed to the Shared state at any time, in response to a read request. Alternatively, it may be changed to the Modified state when writing to it.
3. Shared (S): Indicates that this cache line may be stored in other caches of the machine and is clean - it matches the main memory. The line may be discarded (changed to the Invalid state) at any time.
4. Invalid (I): Indicates that this cache line is invalid or unused.

From: MESI protocol, Wikipedia
See also: The Architecture of the Nehalem Processor and Nehalem-EP SMP Platforms by Michael E. Thomadakis, Section 5.2 on "Cache-Coherence Protocol for Multi-Processors"

The Memory Bus

- Cache coherence protocols involve communication between procs, obtaining information about changes to memory
- The **Memory Bus** is the communication channel that enables Procs/Memory chips to "talk" to each other
- Hardware construct to move data around, usually across wires connected to each Proc and DRAM chip
- Memory Buses use a communication protocol which includes **device identifiers** so messages about changes are directed to individual PEs or DRAM
- Bus can get "crowded" if lots of Procs make memory requests
- All hardware can "see" messages on the bus: allows **snooping** of messages intended for others
- Example: PE1 sees that PE0 read address #1024 so PE0 knows it may share #1024 now

Diagram of Typical Memory Buses

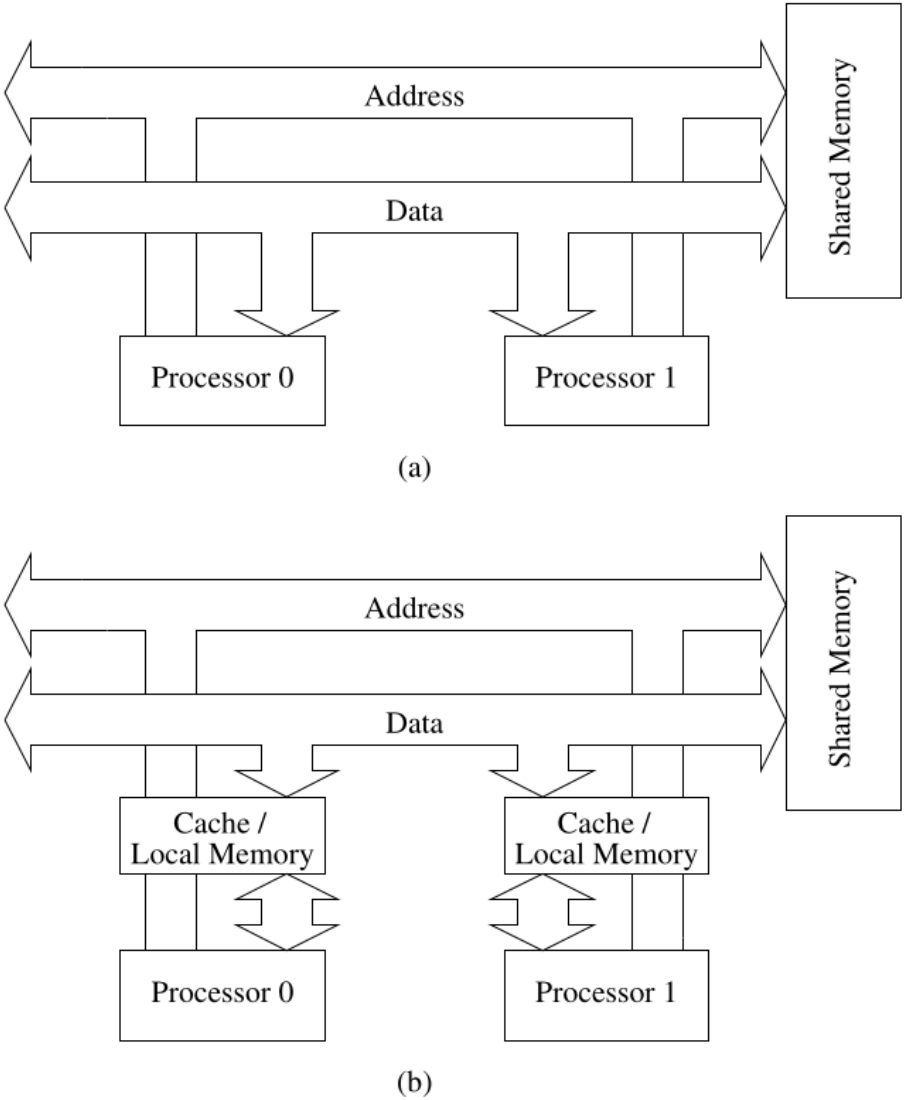

Figure 2.7 Bus-based interconnects (a) with no local caches; (b) with local memory/caches.

Snoopy Cache

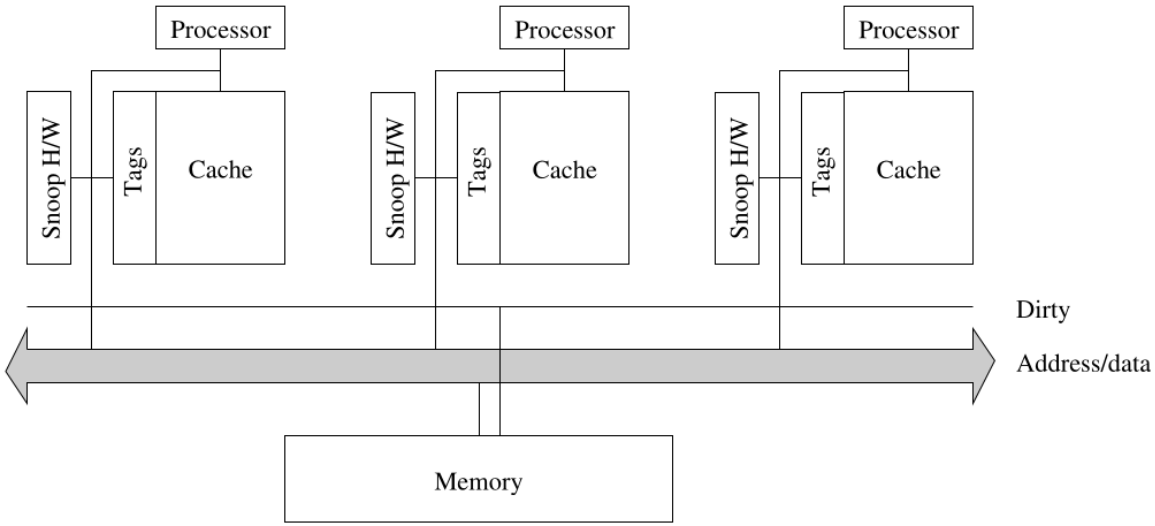

Figure 2.24 A simple snoopy bus based cache coherence system.

Basics

- Additional hardware watches messages on the bus
- Writing to cache invalidates global memory
- Message pertaining to a dirty memory address cause flush, state back to shared

Example

- `x` in P0 cache Dirty
- `x` in Global mem Invalid
- P1 reads `x`
  - P0 "snoops" request
  - Flushes `x` to global mem
  - P1 can read `x` from global
- `x` is now Shared

Different Variable but Same Cache Line → Collisions

- Performance problem: two processors grinding on different but close variables
- Consider the following program: `x,y` are adjacent in main memory, likely to share same cache line
- Proc0 and Proc1 each have own cache, will interfere with one another despite working on different variables
- Often referred to as **False Sharing** between procs / threads

```
int x=42;
int y=31;
void collide(){
  if(proc_id == 0){
    for(int i=0; i<1000; i++){
      x = (x+1)*(x+3)/x;
    }
  }
  else{
    for(int i=0; i<1000; i++){
      y = y/2;
      y = y+2*y;
    }
  }
}
```

Exercise: General Fixes for False Sharing

- Suggest a means to limit/avoid false sharing in the provided code
- Try to minimize the amount of code that changes
- There are at least 2 mechanisms to do this

```
int x=42;
int y=31;
void collide(){
  if(proc_id == 0){
    for(int i=0; i<1000; i++){
      x = (x+1)*(x+3)/x;
    }
  }
  else{
    for(int i=0; i<1000; i++){
      y = y/2;
      y = y+2*y;
    }
  }
}
```

Answers: General Fixes for False Sharing

Local Var Copy

```
int x=42;
int y=31;
void collide(){
  if(proc_id == 0){
    int myx = x;  // thread local copy
    for(int i=0; i<1000; i++){
      myxx = (myx+1)*(myx+3)/x;
    }
    x = myx;      // write back
  }
  else{
    int myy = y;  // local copy
    for(int i=0; i<1000; i++){
      myy = myy/2;
      myy = myy+2*myy;
    }
    y = myy;      // write back
  }
}
```

Pad Data

```
int x=42;
char padding[CACHE_LINE_SIZE]; // junk
int y=31;          // forced to a
void collide(){    // new cache line
  if(proc_id == 0){
    for(int i=0; i<1000; i++){
      x = (x+1)*(x+3)/x;
    }
  }
  else{
    for(int i=0; i<1000; i++){
      y = y/2;
      y = y+2*y;
    }
  }
}
```

NOTE: Heap-allocated data via `malloc()` (or Java allocator) may pack bytes closely together. May need to pad data structures to avoid false sharing as well.

Cache Coherence Overall

- Caches speed up individual processor execution in most cases
- Coordinating caches across several PEs is complex
- Requires additional hardware such for Snooping, alternatively Directory-based approach (textbook)
- Hardware manages most of this but uses techniques that are strikingly similar distributed memory systems: *avoid sharing data when possible to limit cache invalidation / collisions*
- To eek out more performance, programmers should be aware of these things when using Thread-based programs
- Will look at avoid performance pitfalls like false sharing as we move ahead