Project Crashing & Cost-Time Trade-offs

Exercise 9.3 - Least-Cost Crashing

Goal: Reduce the schedule to its "crash point" (minimum time) using the least-cost method.

Initial State:

- Critical Path: A-B-D-G-H
- Duration: 16-time units
- Direct Cost: $1,400

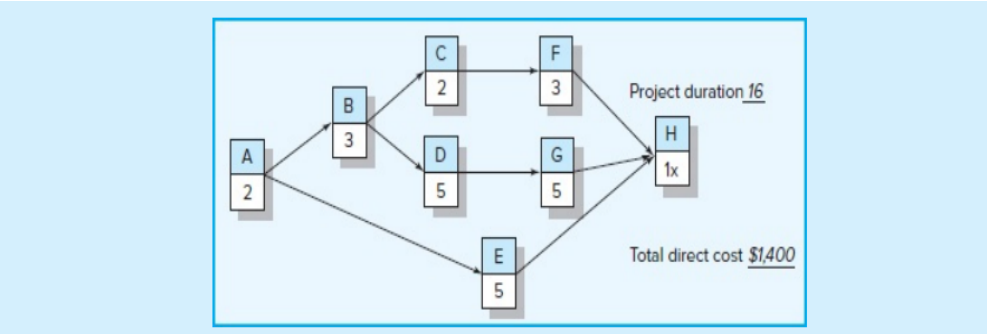

Method:

1. Identify crashable activities on the CP:

2. A ($100), B ($80), D ($40), G ($20).
3. Always crash the cheapest one first: Activity G ($20).
4. Recalculate and repeat.

Exercise 9.3 - Crashing Sequence & Results

Move 1 (16 → 15): Crash G by 1. Cost = $1,400 + $20 = $1,420.

Move 2 (15 → 14): Crash D by 1. Cost = $1,420 + $40 = $1,460.

Move 3 (14 → 13): Crash B by 1. Cost = $1,460 + $80 = $1,540.

Move 4 (13 → 12): Crash A by 1. Cost = $1,540 + $100 = $1,640.

Final Result:

- Crash Point (Min. Time): 12 units.
- Final Direct Cost: $1,640.
- *All activities on the critical path are now at their crash limits*.

Exercise 9.3 - Crashing Sequence & Results

Final Result:

- Crash Point (Min. Time): 12 units.
- Final Direct Cost: $1,640.
- *All activities on the critical path are now at their crash limits*

Can we reduce further?

- All activities on the **critical path (A, B, D, G, H)** are now at their crash limits (A,B,D,G have 0 remaining; H is non-crashable).
- Noncritical paths are at most 10, so even crashing off-path tasks (C, E, F) would **not** create a new critical path of length 12 to allow another reduction.
- Therefore, **12-time units** is the **network crash point (minimum time)**.

Exercise 9.3 - Crashing Sequence & Results

Act.	Crash Cost (slope)	Maximum Crash Time	Normal Time	Normal Cost
A	100	1	2	150
B	80	1	3	100
C	60	1	2	200
D	40	1	5	200
E	40	2	5	200
F	40	2	3	150
G	20	1	5	200
H	0	0	1	200

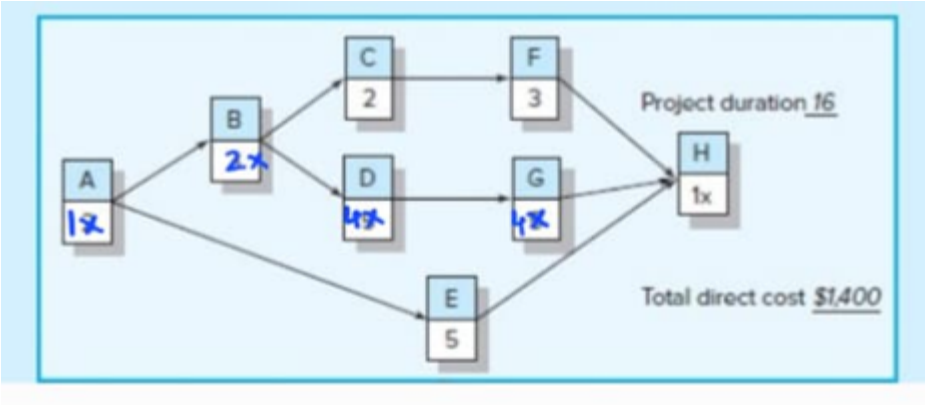

Exercise 9.4 - Finding the Optimal Schedule

This problem introduces Indirect Costs.

Goal: Find the duration with the lowest Total

Project Cost.

Initial State (15 units):

- Direct: $730
- The indirect costs for each project duration are $90 (15-time units), $70 (14), $50 (13), $40 (12), and $30 (11)

Act.	Crash Cost (slope)	Maximum Crash Time	Normal Time	Normal Cost
A	30	1	5	50
B	60	2	3	60
C	0	0	4	70
D	10	1	2	50
E	60	3	5	100
F	100	1	2	90
G	30	1	5	50
H	0	0	2	60
I	200	1	3	200
				$730

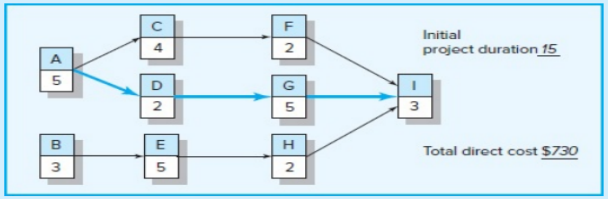

Exercise 9.4 - Crashing & Cost Analysis

Move 1 (15 → 14): Crash D (least cost on CP) for +$10.

- Direct: $740, Indirect: $70. Total = $810 (Cheaper!)

Move 2 (14 → 13): Now 2 CPs. Must crash both. Crash A for +$30.

- Direct: $770, Indirect: $50. Total = $820 (Cost went up)

Conclusion: The optimal duration is 14-time units, with a minimum total cost of $810.

Key Takeaway: The shortest project is not always the cheapest.

Exercise 9.4 - Crashing & Cost Analysis

- Optimum cost-time schedule
- Optimal duration = 14-time units
- Optimal total cost = $810
- Achieved by crashing D
  by 1 time unit only

Direct cost by duration

Project duration	Direct cost
15	$730
14	$740
13	$770
12	$960
11	$1,160

(Sequence of crashes: D(1) → A(1) → {G(1), F(1), B(1)} → I(1)).

Add indirect cost

Indirect costs given:
15→$90, 14→$70, 13→$50, 12→$40, 11→$30.

Duration	Direct	Indirect	Total project cost
15	$730	$90	**$820**
14	$740	$70	**$810**
13	$770	$50	**$820**
12	$960	$40	**$1,000**
11	$1,160	$30	**$1,190**

Exercise 9.4 - Crashing & Cost Analysis

Act.	Crash Cost (slope)	Maximum Crash Time	Normal Time	Normal Cost
A	30	1	5	50
B	60	2	3	60
C	0	0	4	70
D	10	1	2	50
E	60	3	5	100
F	100	1	2	90
G	30	1	5	50
H	0	0	2	60
I	200	1	3	200
				$730

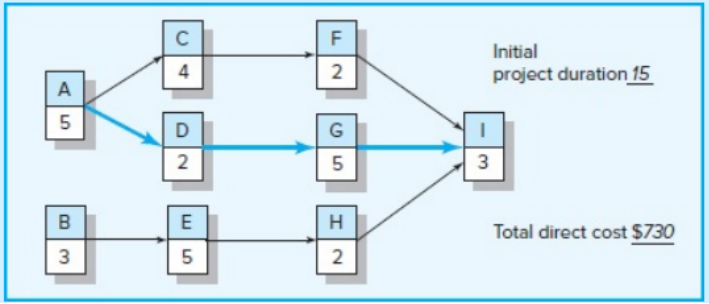

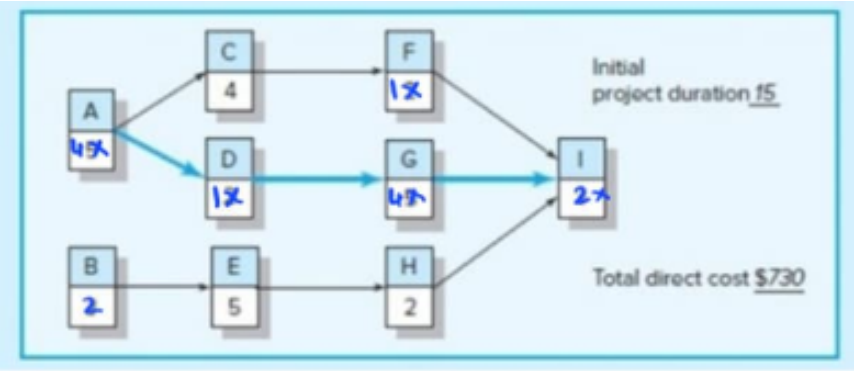

Exercise 9.7 - Visualizing the Cost-Time Trade-off

Act.	Crash Cost (slope)	Maximum Crash Time	Normal Time	Normal Cost
A	0	0	2	200
B	50	1	4	1,000
C	200	2	5	800
D	200	2	5	1,000
E	100	1	3	800
F	40	1	5	1,000
G	40	1	4	1,000
H	0	0	1	200

Network setup (normal plan)

- **Path and durations:**
- A-B-C-E-F-H = 2+4+5+3+5+1 = 20
- A-B-D-E-F-H = 2+4+5+3+5+1 = 20 <- two critical path
- A-B-C-E-G-H = 19; A-B-D-E-G-H = 19

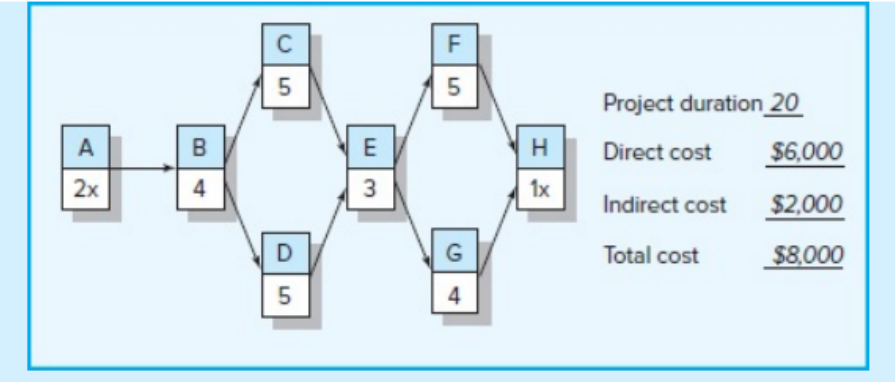

Exercise 9.7 - Crashing & Cost Analysis

Move 1 (20 → 19): Crash F by 1. Cost = $6000 + $40 = $6040.

Move 2 (19 → 18): Crash B by 1. Cost = $6040 + $50 = $6090.

Move 3 (18 → 17): Crash E by 1. Cost = $6090 + $100 = $6190.

Move 4 (17 → 16): Crash G,C,D by 1. Cost = $6190 + $440 = $6630.

Move 5 (16 → 15): Crash C and D by 1. Cost = $6630 + $400 = $7030.

Direct, indirect, and total cost by duration

(Indirect = $2,000 – $100×reduction)

Duration	Direct ($)	Indirect ($)	Total ($)
20	6,000	2,000	**8,000**
19	6,040	1,900	**7,940**
18	6,090	1,800	**7,890**
17	6,190	1,700	**7,890**
16	6,630	1,600	**8,230**
15	7,030	1,500	**8,530**

Optimum cost–time schedule

- Minimum total cost = $7,890, achieved at 18- or 17-time units (flat bottom).
- The shortest schedule at the minimum cost, we choose 17-time units (crash F, B, E).

Exercise 9.7 - Crashing & Cost Analysis

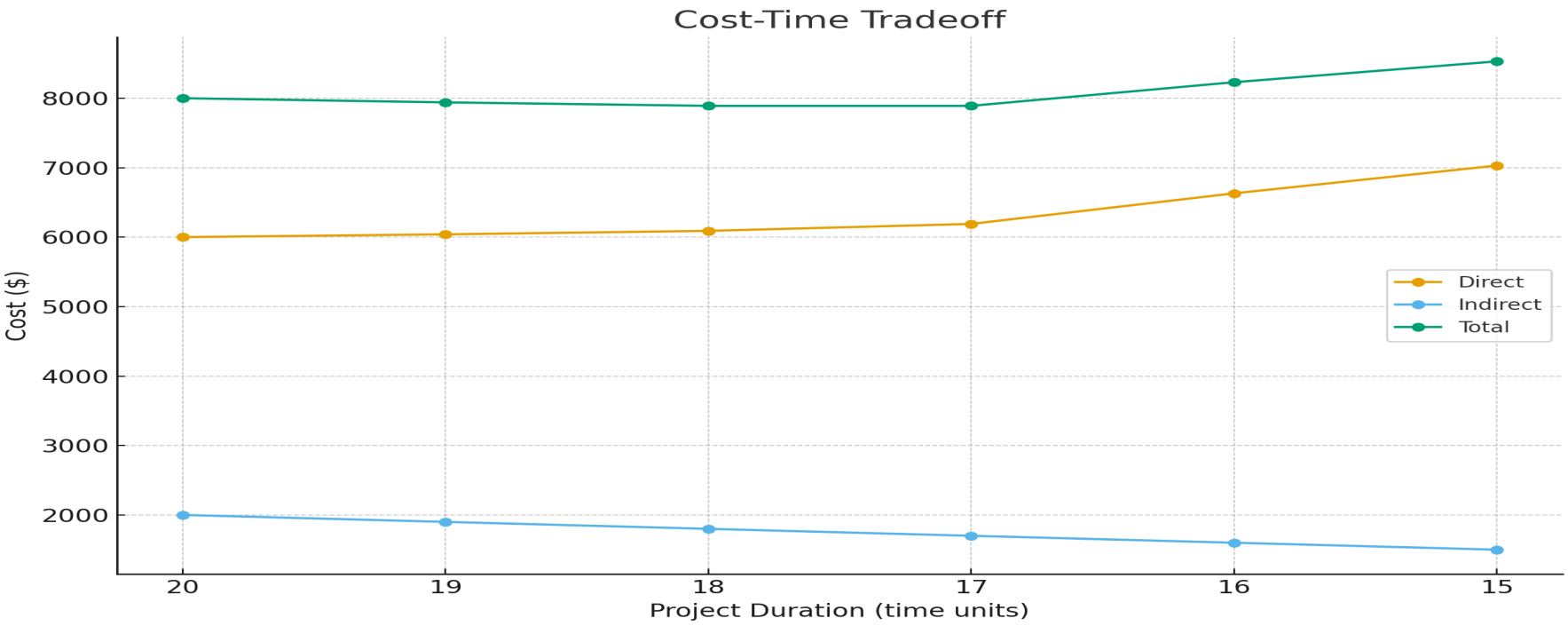

Exercise 9.7 - Crashing & Cost Analysis

Act.	Crash Cost (slope)	Maximum Crash Time	Normal Time	Normal Cost
A	0	0	2	200
B	50	1	4	1,000
C	200	2	5	800
D	200	2	5	1,000
E	100	1	3	800
F	40	1	5	1,000
G	40	1	4	1,000
H	0	0	1	200

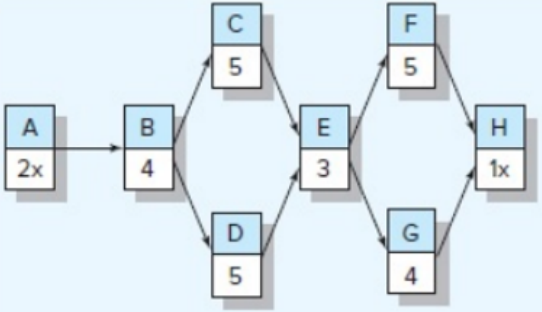

Project duration 20

Direct cost $6,000

Indirect cost $2,000

Total cost $8,000

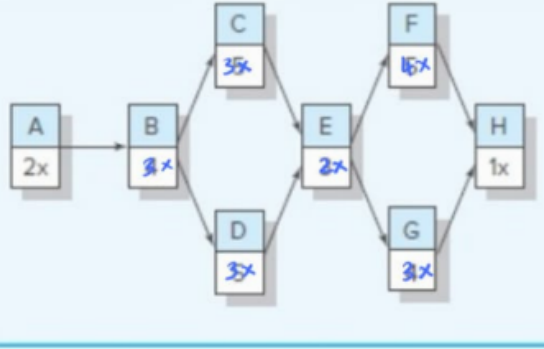

Project duration 20

Direct cost $6,000

Indirect cost $2,000

Total cost $8,000

Case 9.1: International Capital, Inc.—Part B

Activity	Description	Immediate Predecessor
A	Start story draft using template	—
B	Research client firm	—
C	Create "due diligence" rough draft	A, B
D	Coordinate needs proposal with client	C
E	Estimate future demand and cash flows	C
F	Draft future plans for client company	E
G	Create and approve legal documents	C
H	Integrate all drafts into first-draft proposal	D, F, G
I	Line up potential sources of capital	G, F
J	Check, approve, and print final legal proposal	H
K	Sign contracts and transfer funds	I, J

	Time in Workdays		
Activity	Optimistic	Most Likely	Pessimistic
A	4	7	10
B	2	4	8
C	2	5	8
D	16	19	28
E	6	9	24
F	1	7	13
G	4	10	28
H	2	5	14
I	5	8	17

Activity	Normal Cost	Maximum Crash Time	Crash Cost/Day
A	$ 3,000	3	$ 500
B	5,000	2	1,000
C	6,000	0	—
D	20,000	3	3,000
E	10,000	2	1,000
F	7,000	1	1,000
G	20,000	2	3,000
H	8,000	1	2,000
I	5,000	1	2,000
J	7,000	1	1,000
K	12,000	6	1,000
Total normal costs =	$103,000		

Case 9.1: International Capital, Inc.—Part B

PERT expected time $t_e = \frac{a+4m+b}{6}$ for each activity:

Act	a	m	b	t_e
A	4	7	10	**7.0**
B	2	4	8	**4.333**
C	2	5	8	**5.0**
D	16	19	28	**20.0**
E	6	9	24	**11.0**
F	1	7	13	**7.0**
G	4	10	28	**12.0**
H	2	5	14	**6.0**
I	5	8	17	**9.0**
J	2	5	8	**5.0**
K	17	29	45	**29.667**

Case 9.1: International Capital, Inc.—Part B

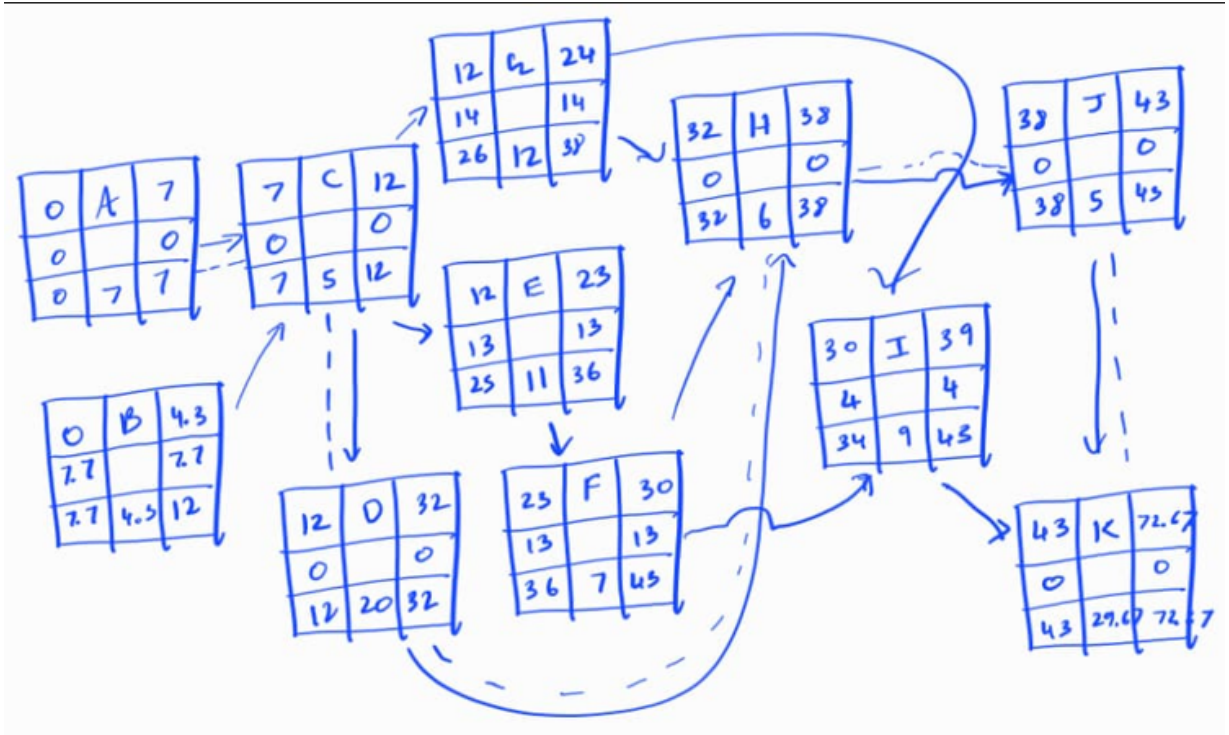

Case 9.1: International Capital, Inc.—Part B

This case applies the same logic but with a daily overhead (indirect cost) of $700 per day.

Analysis:

- Overhead savings = $700/day.
- Only Activity A ($500/day) is "economic" to crash.
- Crashing A saves the project $200/day ($700 overhead - $500 crash cost).
- All other activities cost $1,000+ per day, which is uneconomic.

Case 9.1 : International Capital, Inc.—Part B

- Forward/backward pass results (normal plan):
  - Critical path: A – C – D – H – J – K
  - Project duration: 7+5+20+6+5+29.67=72.67 days
  - Normal direct cost: $103,000
- Slack - all others have positive slack

Case 9.1: Recommendation

- We analyse the total cost by crashing only the economic activity (A).
- Normal (72.7 days): Total Cost = $153,867
- Crash A x1 (71.7 days): Total Cost = $153,667
- Crash A x2 (70.7 days): Total Cost = $153,467 (Lowest Cost)
- Crash A x3 (70.0 days): Total Cost = $153,500 (Cost increases again)

Result: we *can* crash A up to 3 days, but after the 3rd day A drops off the CP.

4) Cost table (Direct, Indirect, Total)

- **Direct cost(t)** = $103,000 + $500 × (days of A crashed)
- **Indirect cost(t)** = $700 × (project duration in days)

Scenario	Duration (days)	Direct ($)	Indirect ($)	Total ($)
Normal (no crash)	**72.667**	103,000	50,866.7	**153,866.7**
Crash A ×1	**71.667**	103,500	50,166.7	**153,666.7**
Crash A ×2	**70.667**	104,000	49,466.7	**153,466.7**
Crash A ×3	**70.000**	104,500	49,000.0	**153,500.0**

Case 9.1 - International Capital, Inc.—Part B

What Beth should bring to the review committee

- A short contingency plan if management demands a shorter finish (crash J/K next, then H, then D, with explicit added cost per day).
- The updated critical path after each step and confirmation that noncritical activities (E, F, G, I) have slack and should not be crashed.

Will this alter your suggestions?

- No, the $700/day overhead does not change the recommendation. Since Activity A has a crash cost of $500/day, which is less than the daily overhead, crashing A reduces the total cost by $200 for each day it is shortened. Therefore, the best strategy remains to crash Activity A by the full 3 days and not crash any other activities.

Case 6-A: Jack Nietzche

The Situation (Key Issue):

- This part of the case appears to involve a team member (referred to as "Jack").
- The challenge is a managerial one, requiring a response that is both professional and humane.

Analysis & Recommended Action:

- The correct approach is to treat the team member with respect.
- The goal is to provide genuine emotional acknowledgment, not just "empty reassurance."
- This is an ethical approach that avoids manipulation or withholding information, which would be damaging in the long term.

The Outcome (Why this approach works):

- It keeps the project moving forward by emphasizing the team member's value to the project.
- It provides a clear future growth path for "Jack," aligning his personal goals with the project's success.

Case 6-B: The Gold Star LAN Project

The Situation (Key Issue):

- You, as the project manager, discover your accounting department added a 10% fee to a client's change order *without* your knowledge.
- You learn this overbilling is a "known internal practice" within the company.
- You are now being asked to sign off on this inaccurate billing document.

The Ethical Problem:

- Signing the document is dishonest and means you would be actively participating in deceiving the client.
- This practice violates professional integrity and is potentially fraudulent, regardless of it being "common practice."
- Your personal reputation and the firm's credibility are at risk.

Case 6-B: The Gold Star LAN Project

Recommended Action & Justification:

- **DO NOT SIGN** the document in its current state.
- **Action:** Formally (and in writing) request clarification from the finance or executive office, asking for the justification and authorization for the 10% adjustment before you can sign.
- **Escalation:** If you are pressured to sign, you must escalate the issue privately and professionally to a higher authority (like the Project Management Office, a Director, or the Ethics/Compliance Office).
- **Why:** This protects you from personal accountability for inaccurate billing, upholds the ethical standard of transparency, and defends your professional integrity.

Thank You