3D CAD EXERCISES

1

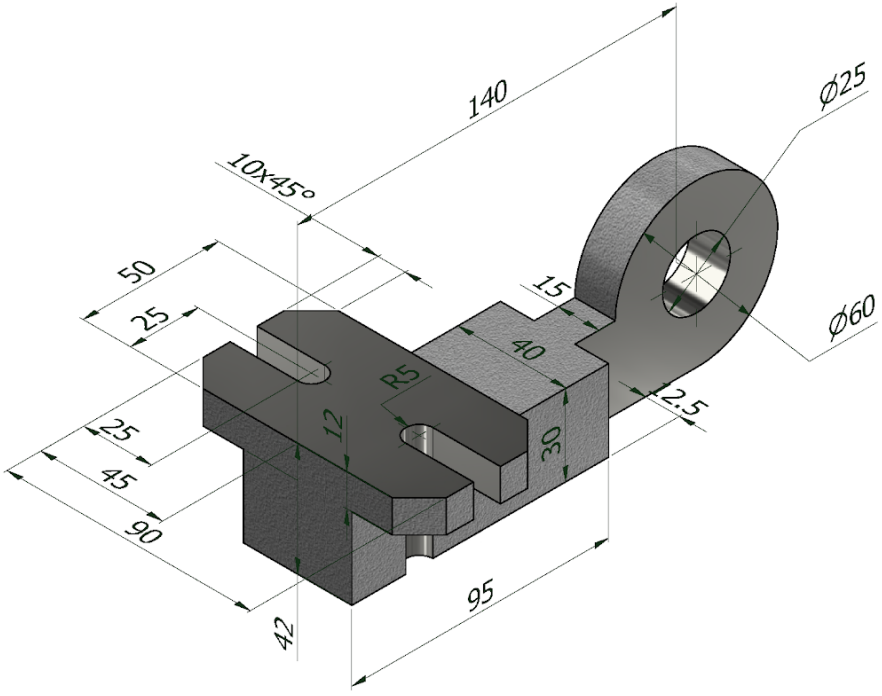

COPYRIGHT © 2020 WWW.STUDYCADCAM.COM ALL RIGHTS RESERVED.

3D CAD EXERCISES

2

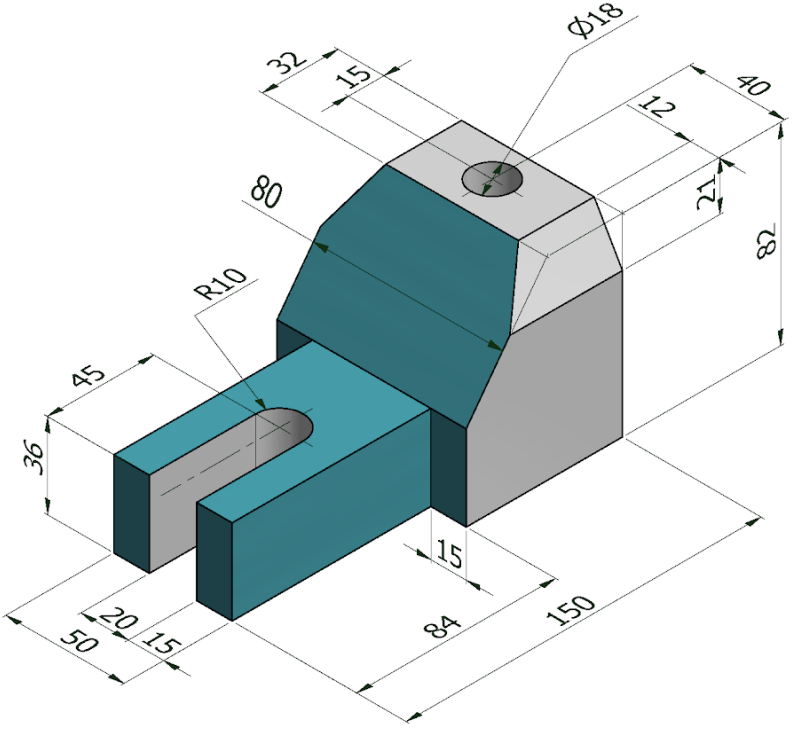

COPYRIGHT © 2020 WWW.STUDYCADCAM.COM ALL RIGHTS RESERVED.

3D CAD EXERCISES

3

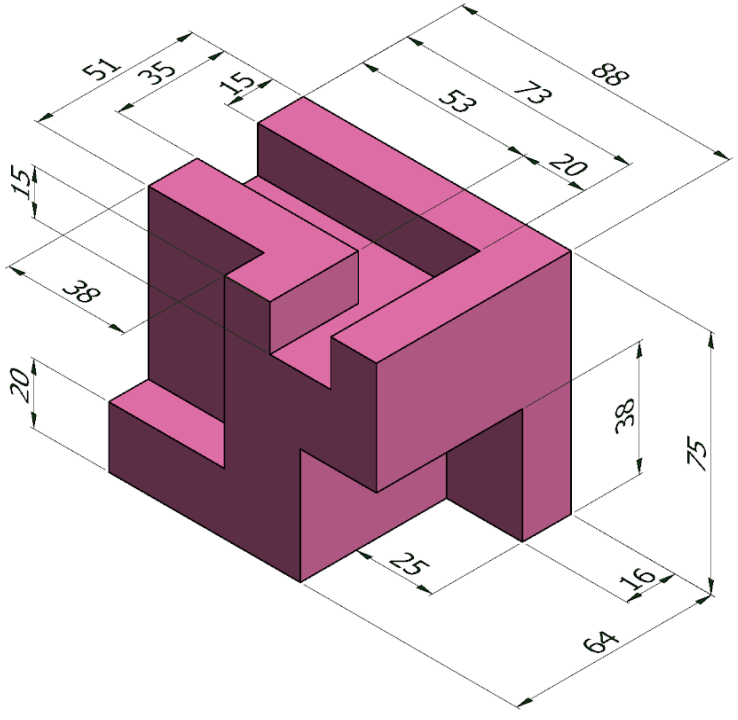

COPYRIGHT © 2020 WWW.STUDYCADCAM.COM ALL RIGHTS RESERVED.

3D CAD EXERCISES

4

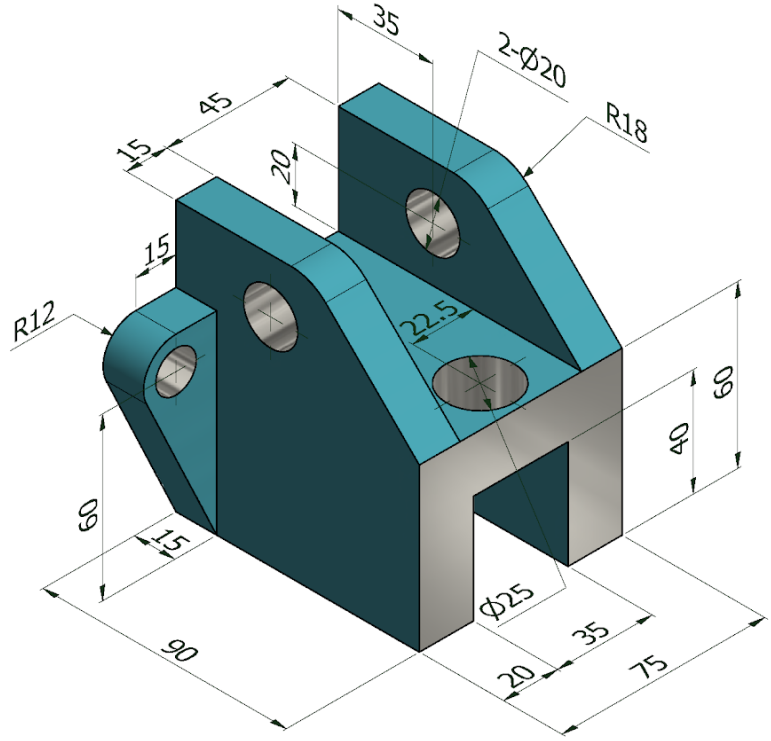

COPYRIGHT © 2020 WWW.STUDYCADCAM.COM ALL RIGHTS RESERVED.

3D CAD EXERCISES

6

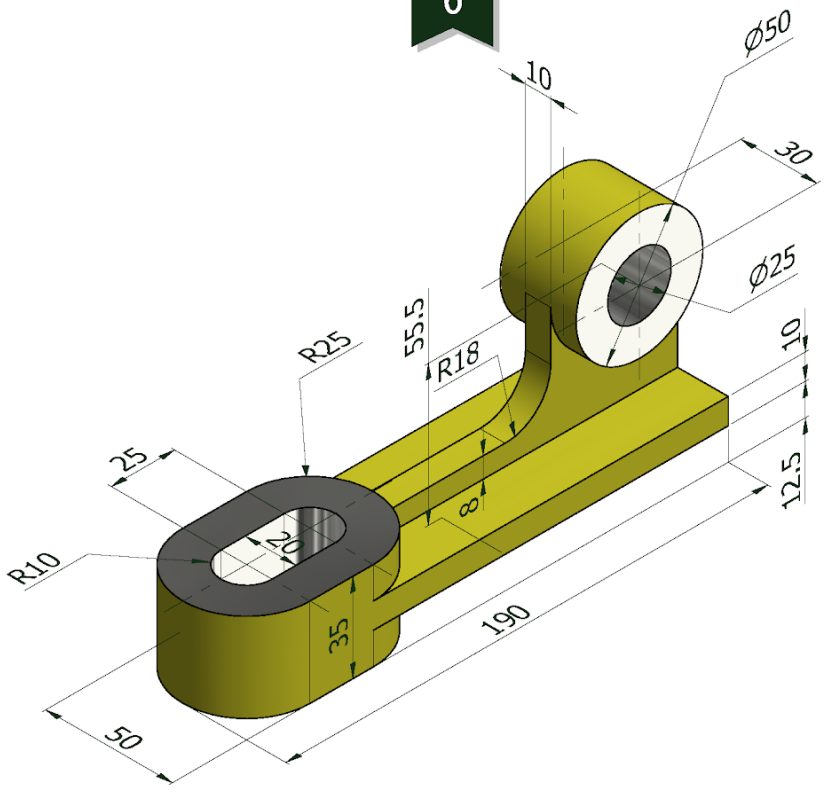

COPYRIGHT © 2020 WWW.STUDYCADCAM.COM ALL RIGHTS RESERVED.

3D CAD EXERCISES

10

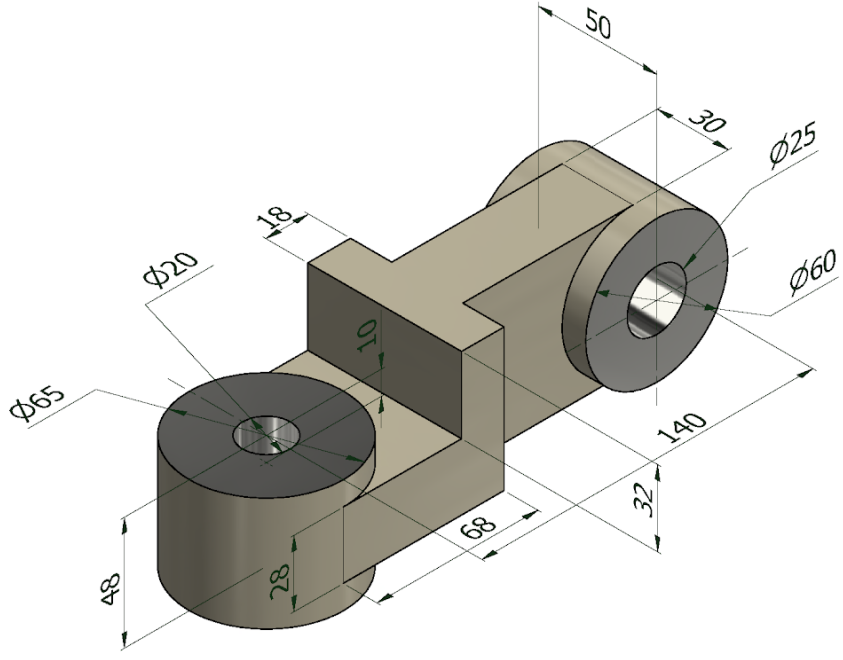

COPYRIGHT © 2020 WWW.STUDYCADCAM.COM ALL RIGHTS RESERVED.

3D CAD EXERCISES

13

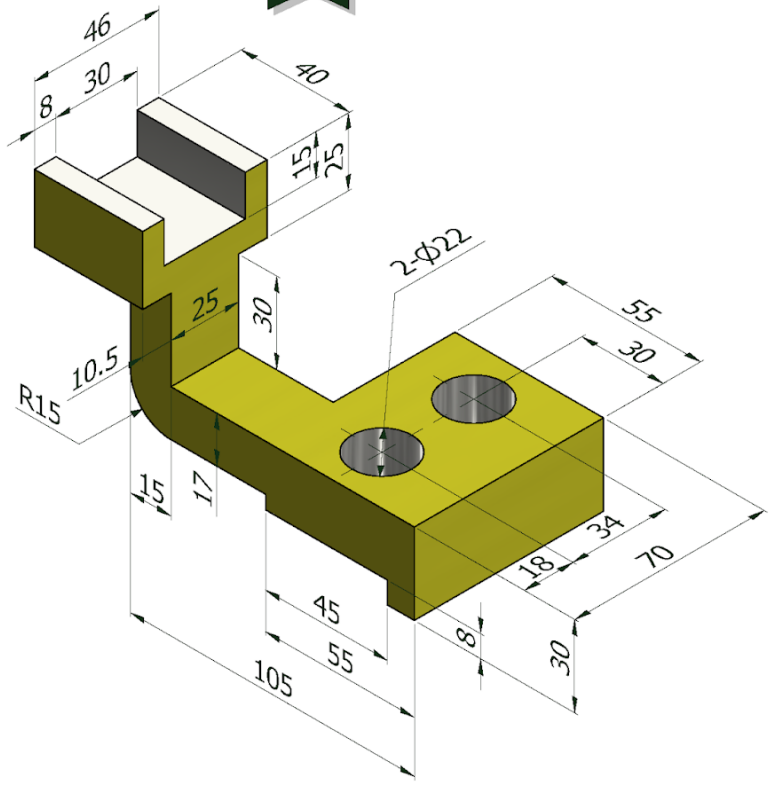

COPYRIGHT © 2020 WWW.STUDYCADCAM.COM ALL RIGHTS RESERVED.

3D CAD EXERCISES

14

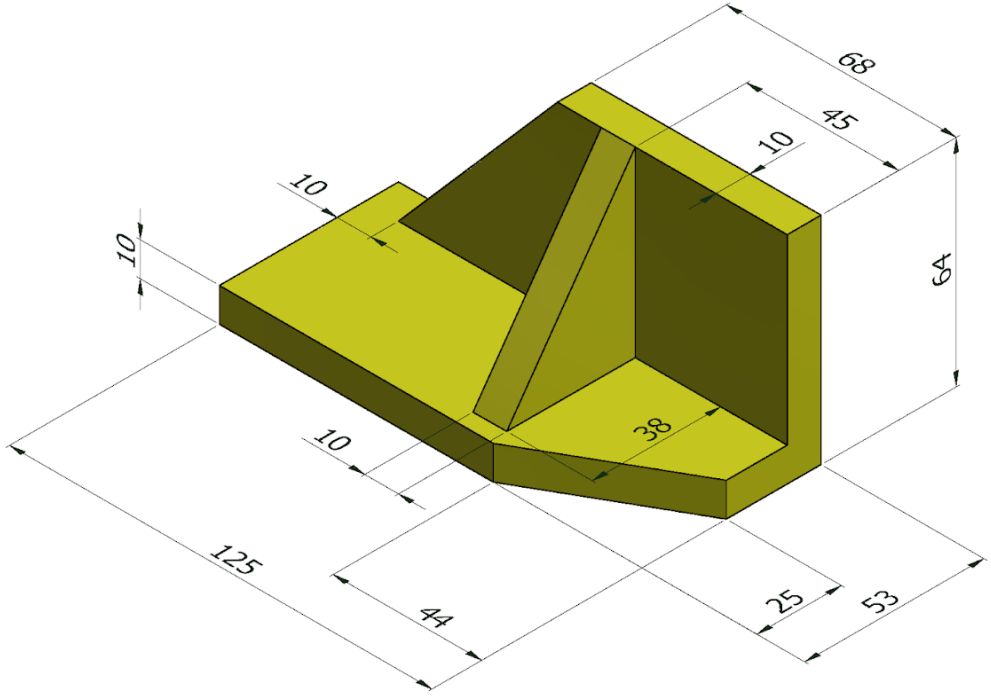

COPYRIGHT © 2020 WWW.STUDYCADCAM.COM ALL RIGHTS RESERVED.

3D EXERCISES

17

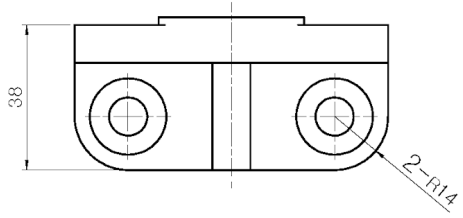

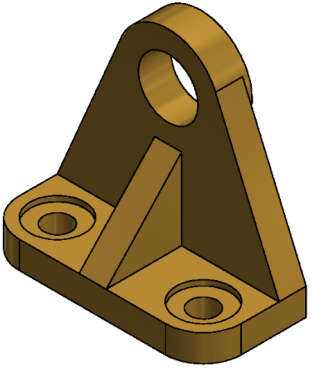

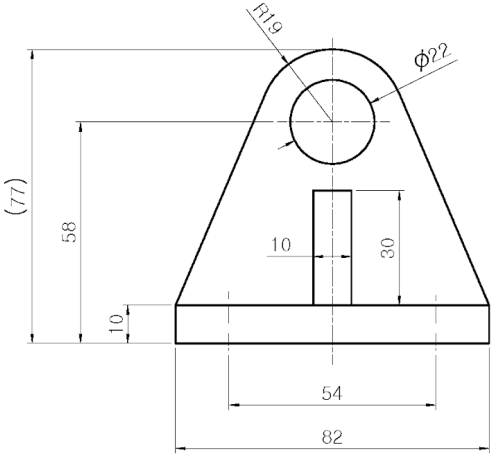

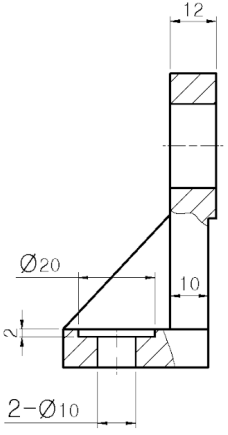

COPYRIGHT © 2020 WWW.STUDYCADCAM.COM ALL RIGHTS RESERVED.

3D CAD EXERCISES

18

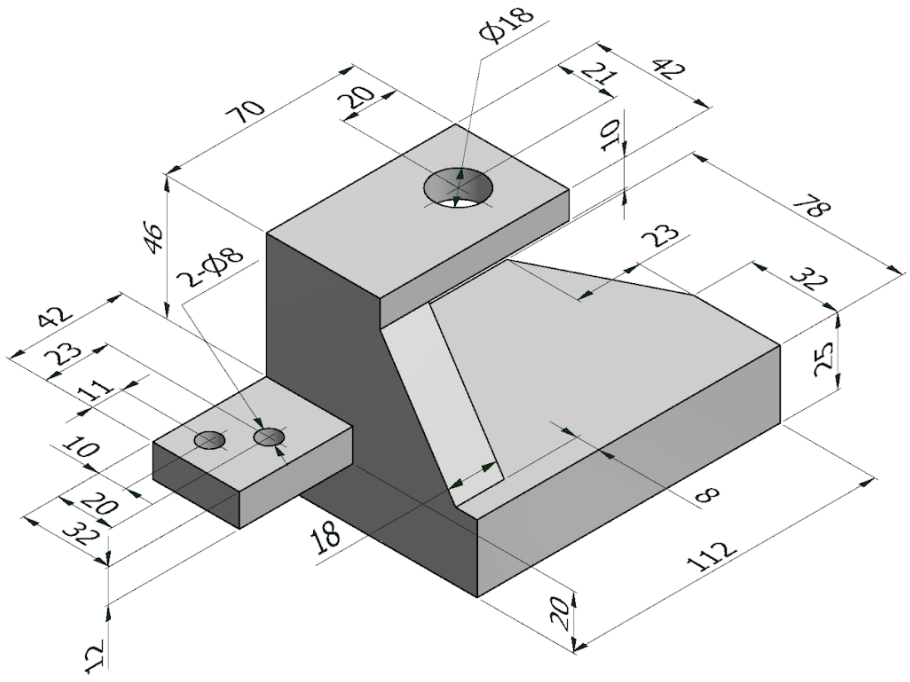

COPYRIGHT © 2020 WWW.STUDYCADCAM.COM ALL RIGHTS RESERVED.

3D CAD EXERCISES

19

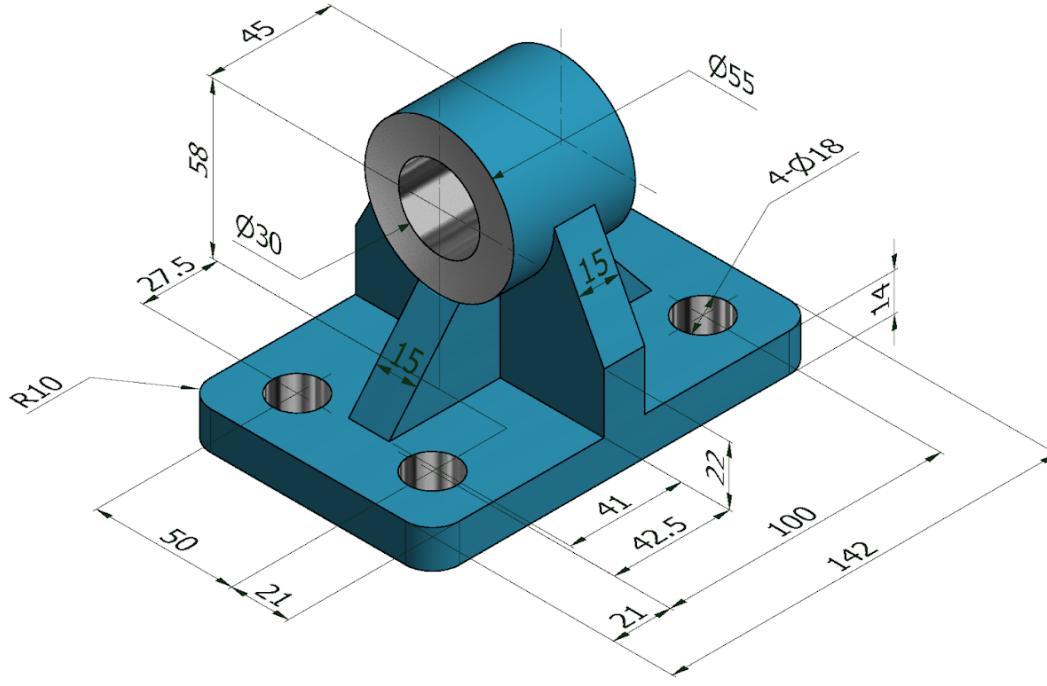

COPYRIGHT © 2020 WWW.STUDYCADCAM.COM ALL RIGHTS RESERVED.

3D CAD EXERCISES

20

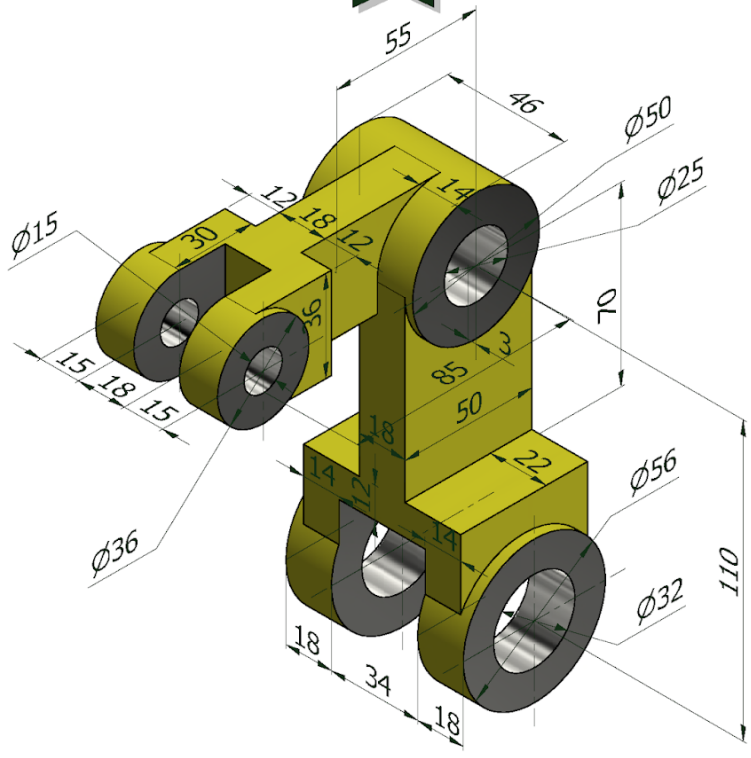

COPYRIGHT © 2020 WWW.STUDYCADCAM.COM ALL RIGHTS RESERVED.

3D EXERCISES

25

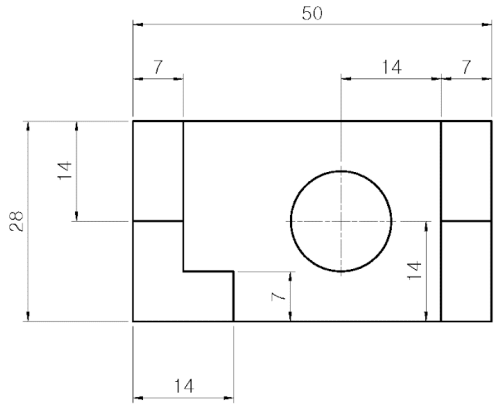

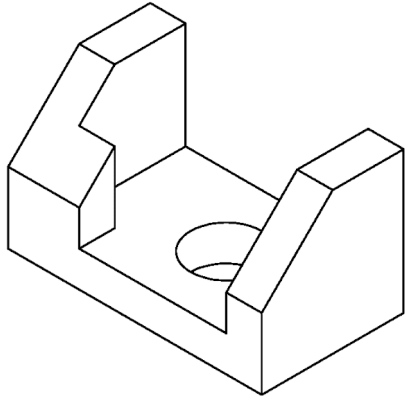

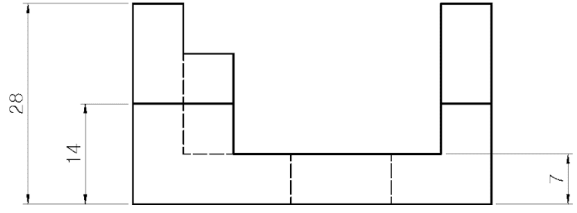

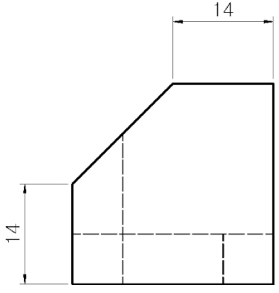

COPYRIGHT © 2020 **WWW.STUDYCADCAM.COM** ALL RIGHTS RESERVED.

3D EXERCISES

29

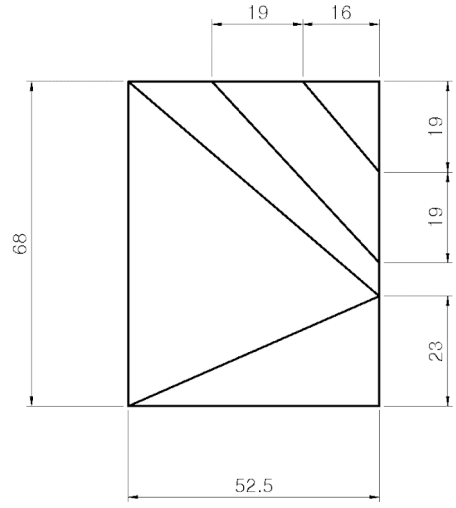

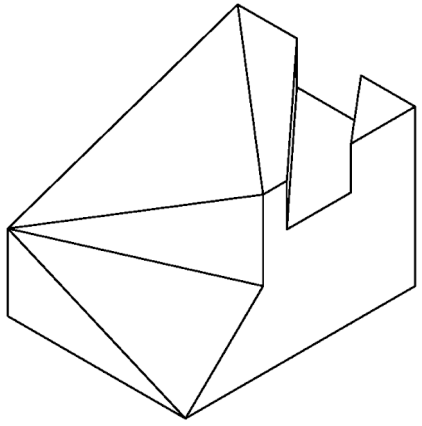

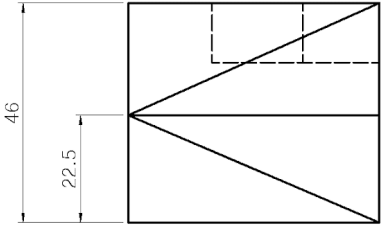

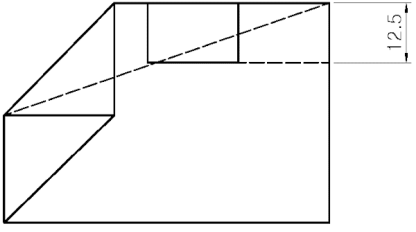

COPYRIGHT © 2020 **WWW.STUDYCADCAM.COM** ALL RIGHTS RESERVED.

3D EXERCISES

55

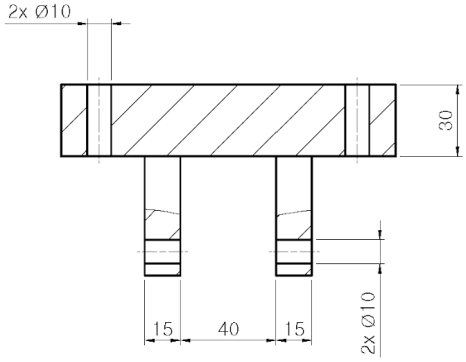

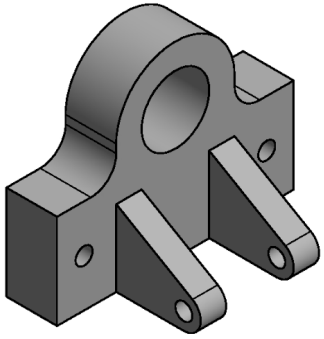

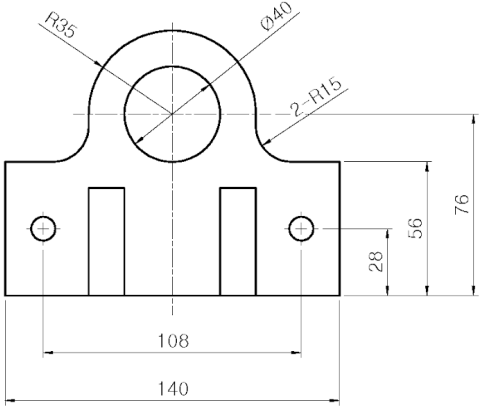

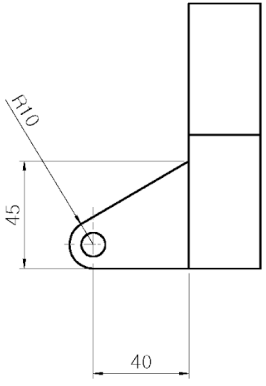

COPYRIGHT © 2020 WWW.STUDYCADCAM.COM ALL RIGHTS RESERVED.

3D EXERCISES

88

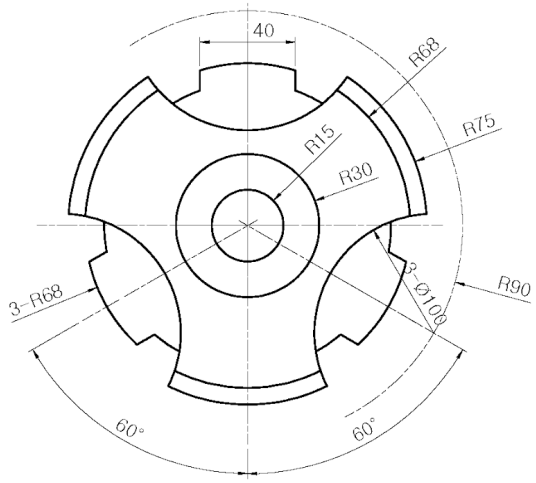

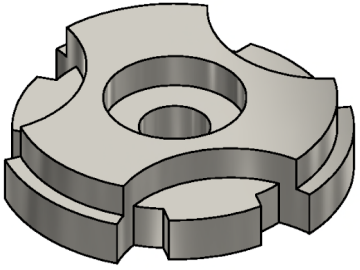

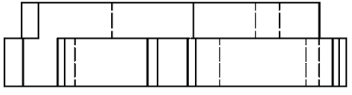

COPYRIGHT © 2020 **WWW.STUDYCADCAM.COM** ALL RIGHTS RESERVED.

3D EXERCISES

92

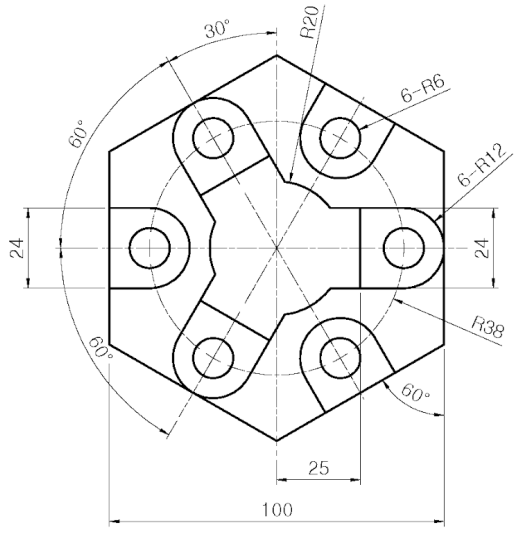

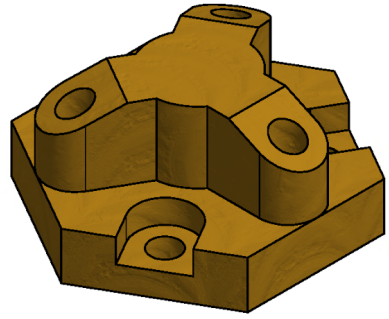

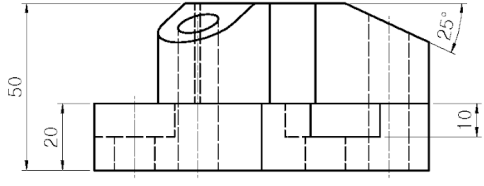

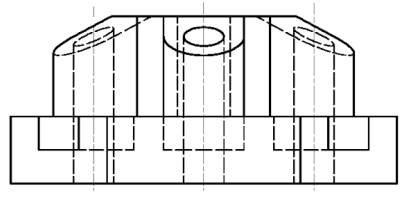

COPYRIGHT © 2020 WWW.STUDYCADCAM.COM ALL RIGHTS RESERVED.

3D EXERCISES

97

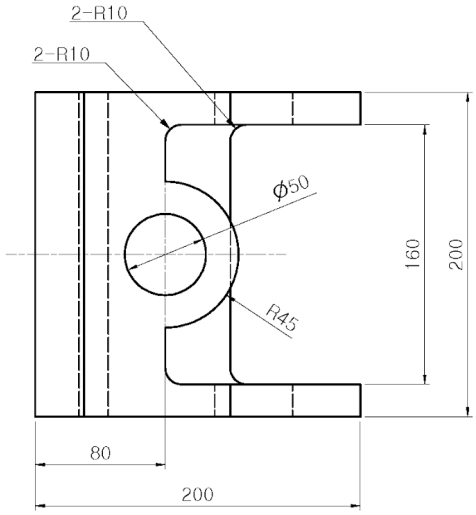

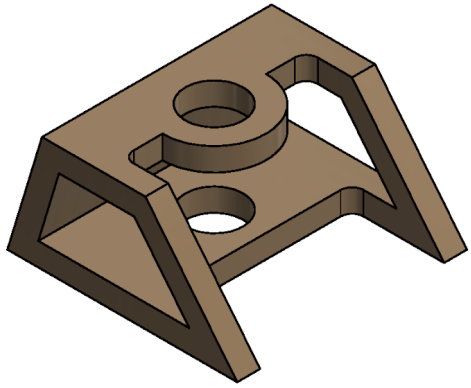

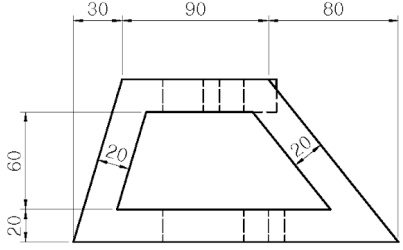

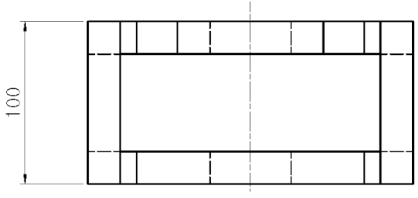

COPYRIGHT © 2020 WWW.STUDYCADCAM.COM ALL RIGHTS RESERVED.

3D EXERCISES

100

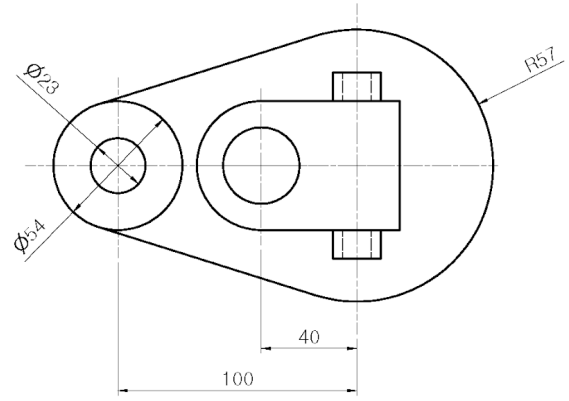

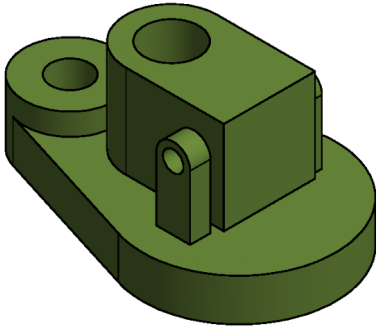

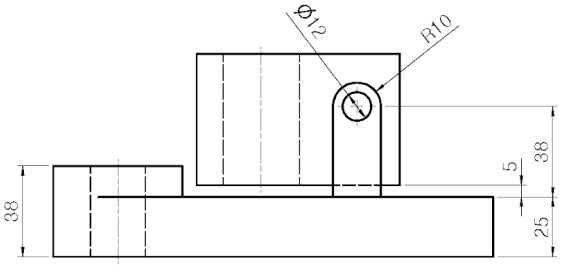

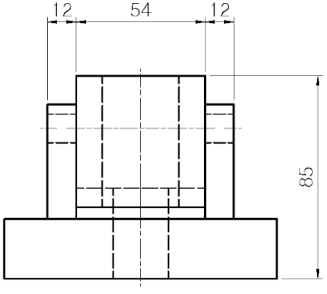

COPYRIGHT © 2020 WWW.STUDYCADCAM.COM ALL RIGHTS RESERVED.

3D EXERCISES

101

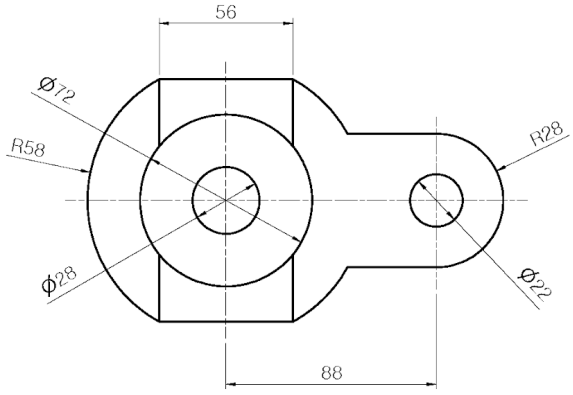

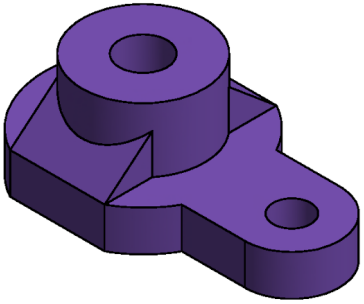

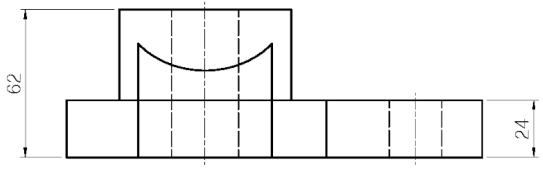

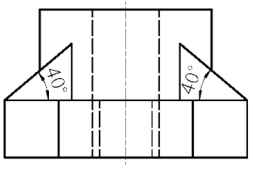

COPYRIGHT © 2020 **WWW.STUDYCADCAM.COM** ALL RIGHTS RESERVED.

3D EXERCISES

104

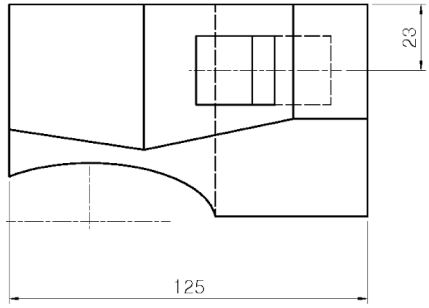

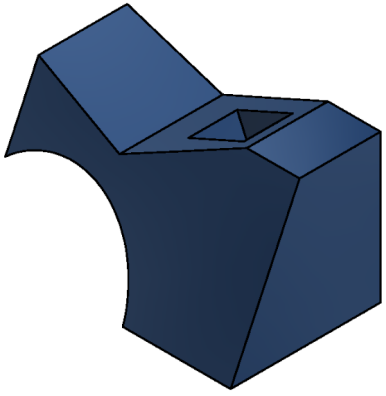

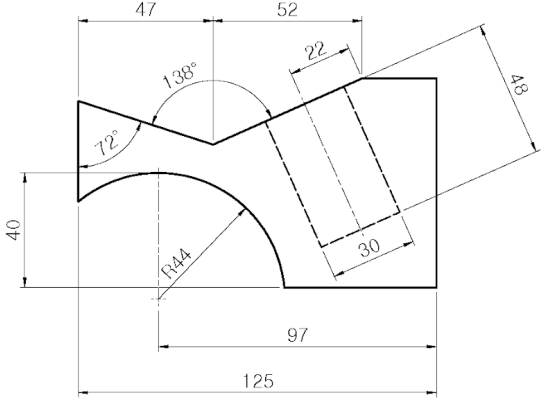

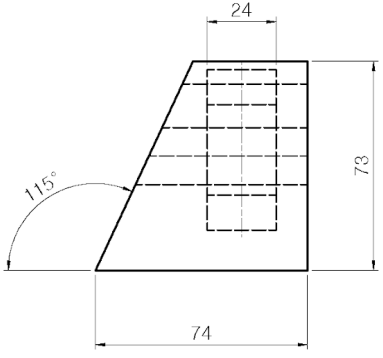

COPYRIGHT © 2020 WWW.STUDYCADCAM.COM ALL RIGHTS RESERVED.

3D EXERCISES

105

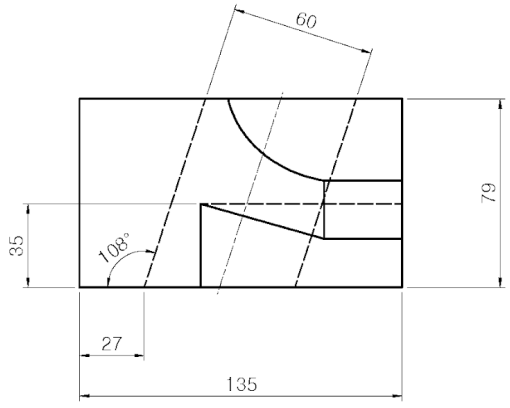

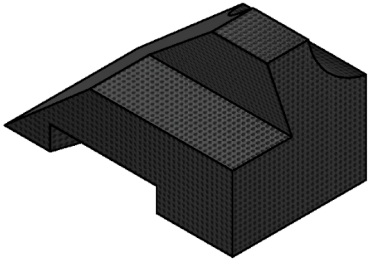

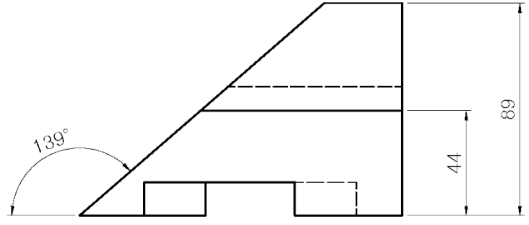

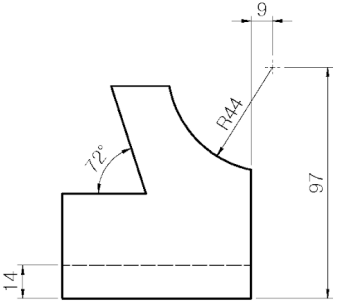

COPYRIGHT © 2020 **WWW.STUDYCADCAM.COM** ALL RIGHTS RESERVED.

3D EXERCISES

106

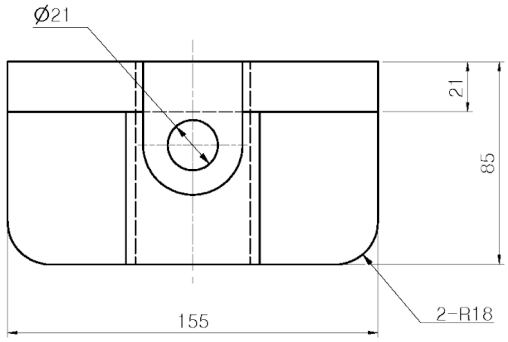

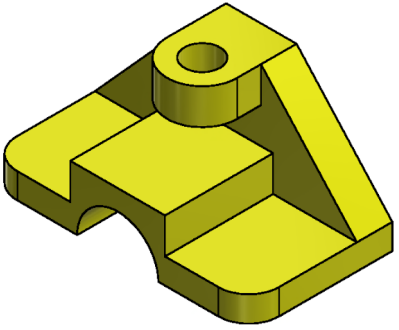

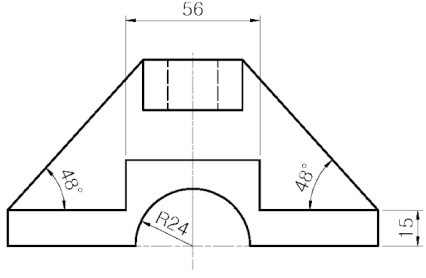

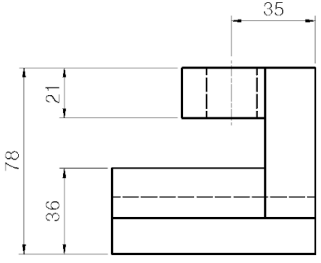

COPYRIGHT © 2020 WWW.STUDYCADCAM.COM ALL RIGHTS RESERVED.

3D EXERCISES

108

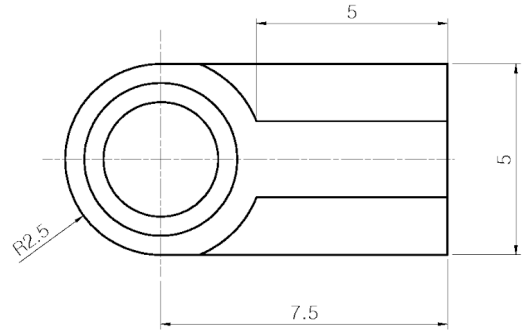

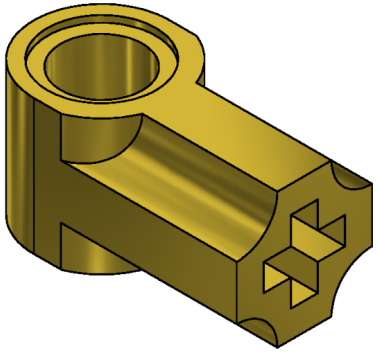

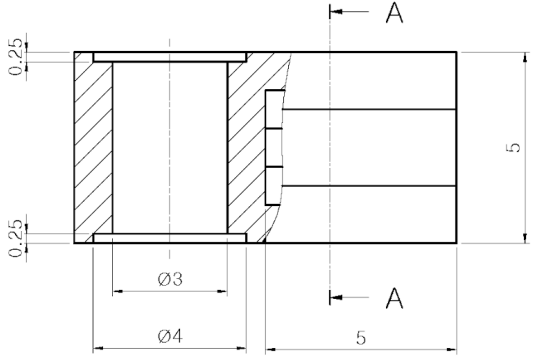

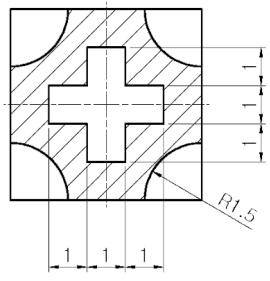

SECTION A–A

COPYRIGHT © 2020 **WWW.STUDYCADCAM.COM** ALL RIGHTS RESERVED.

3D EXERCISES

109

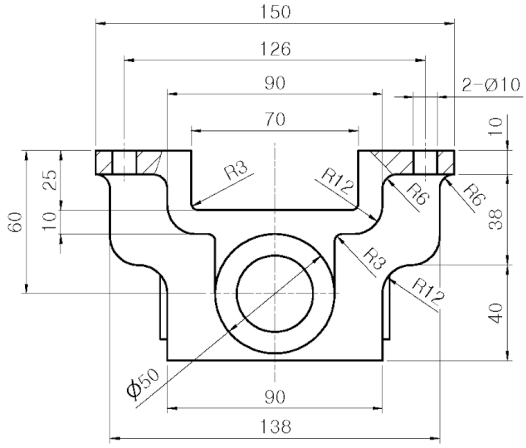

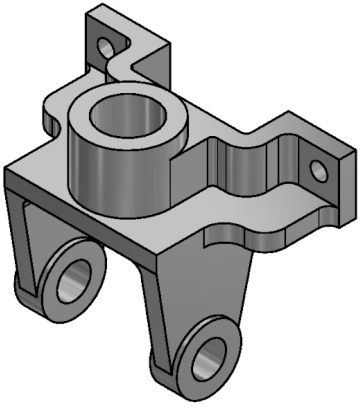

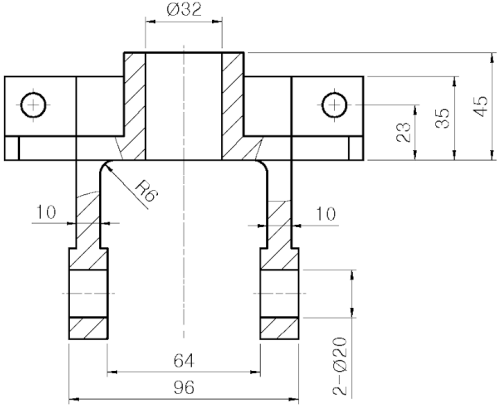

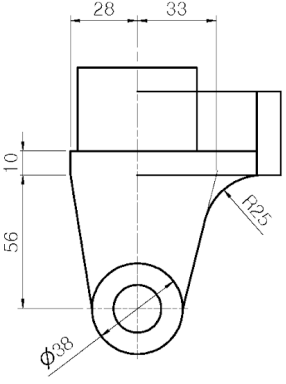

COPYRIGHT © 2020 WWW.STUDYCADCAM.COM ALL RIGHTS RESERVED.

3D EXERCISES

148

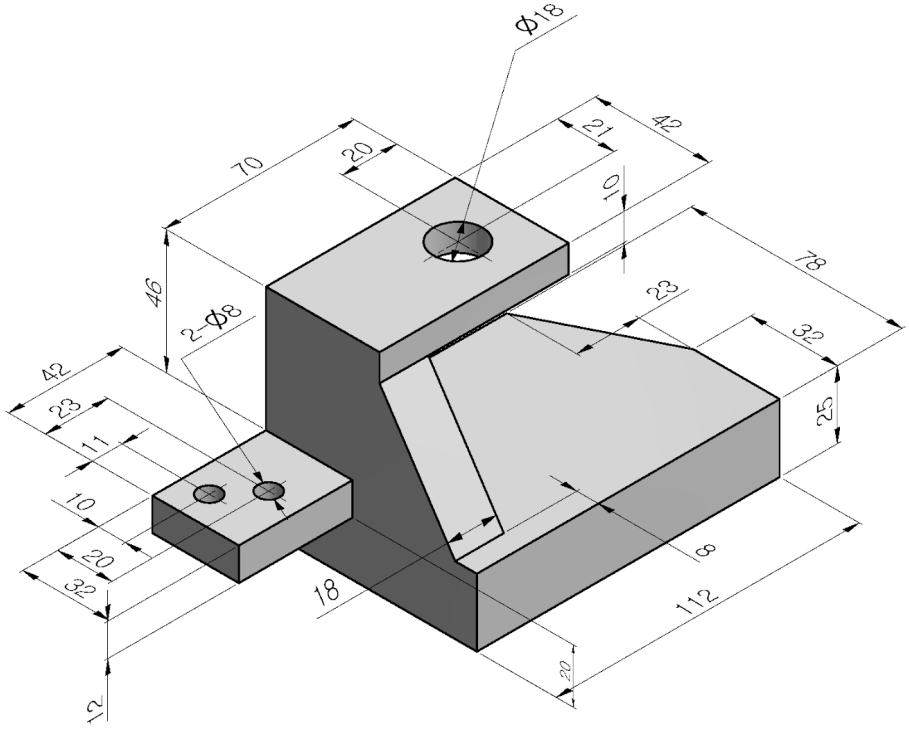

COPYRIGHT © 2020 WWW.STUDYCADCAM.COM ALL RIGHTS RESERVED.

3D EXERCISES

152

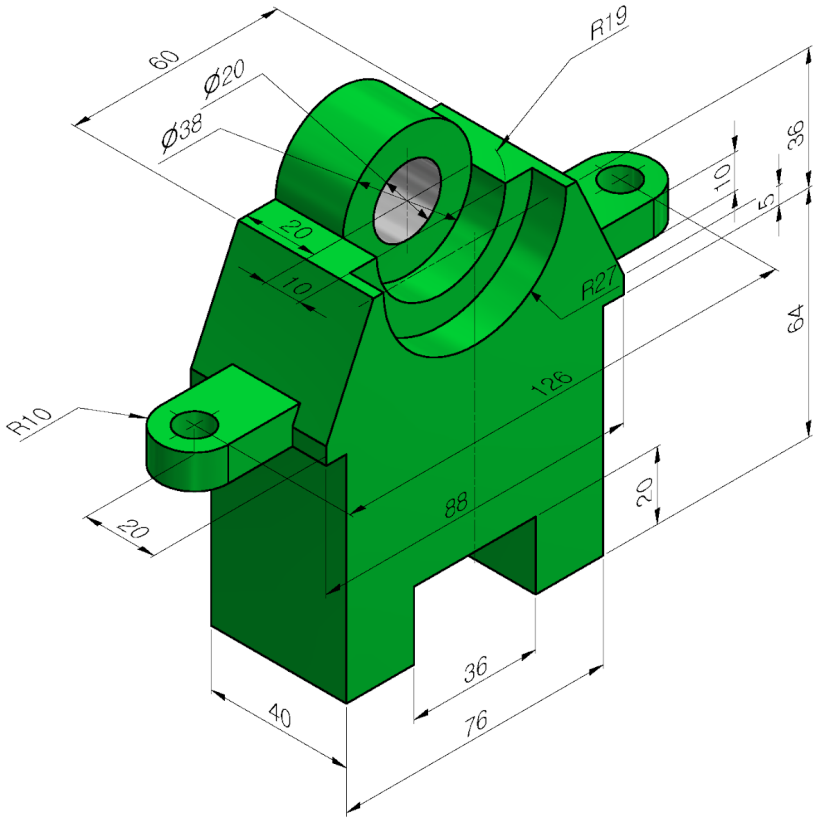

COPYRIGHT © 2020 WWW.STUDYCADCAM.COM ALL RIGHTS RESERVED.

3D EXERCISES

153

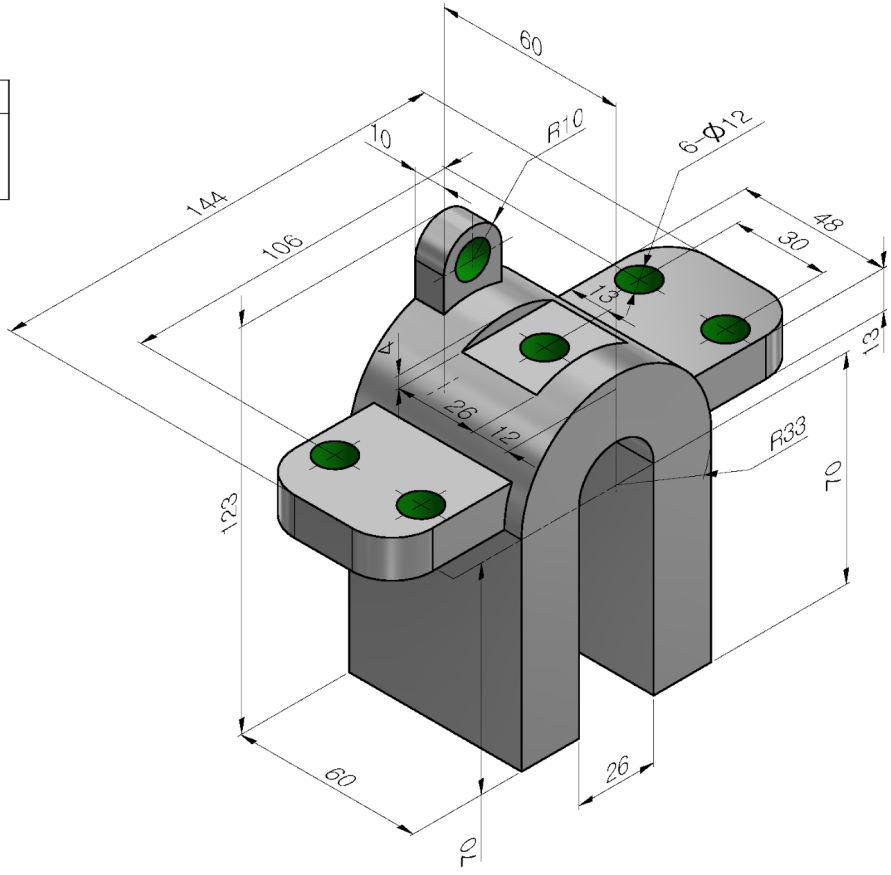

COPYRIGHT © 2020 WWW.STUDYCADCAM.COM ALL RIGHTS RESERVED.

3D EXERCISES

156

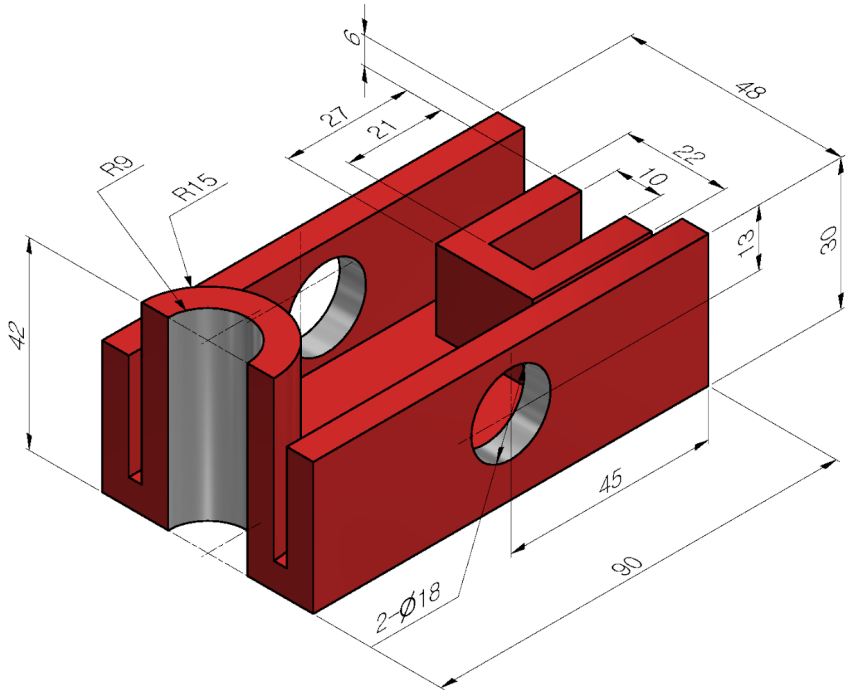

COPYRIGHT © 2020 WWW.STUDYCADCAM.COM ALL RIGHTS RESERVED.

3D EXERCISES

161

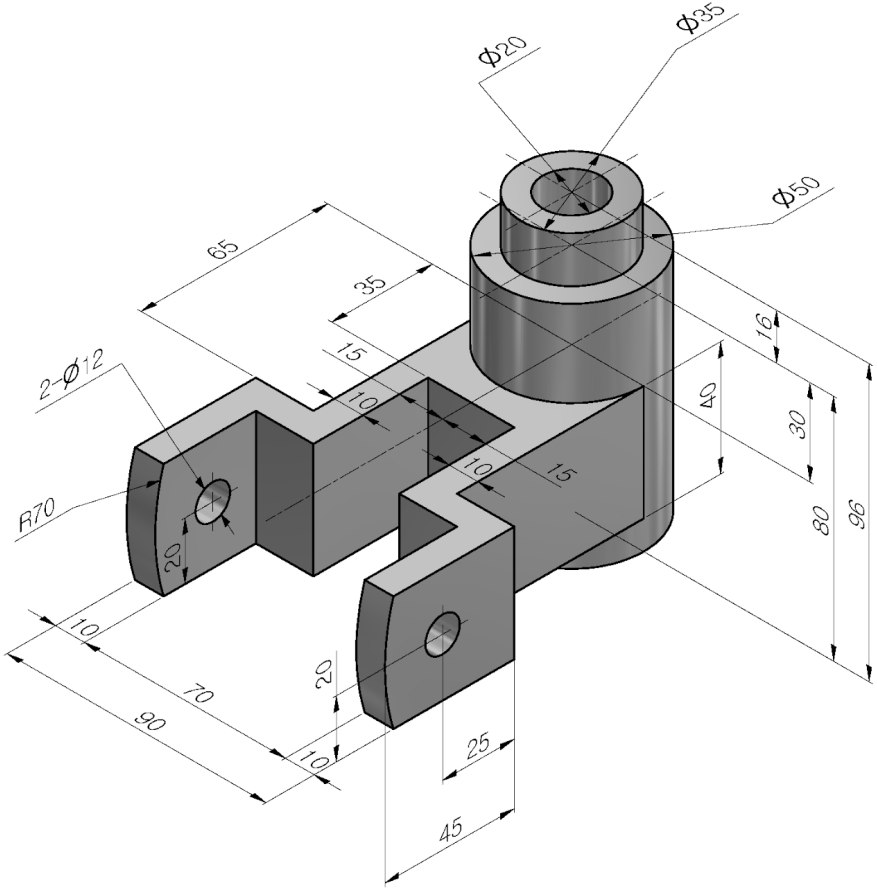

COPYRIGHT © 2020 WWW.STUDYCADCAM.COM ALL RIGHTS RESERVED.

3D EXERCISES

164

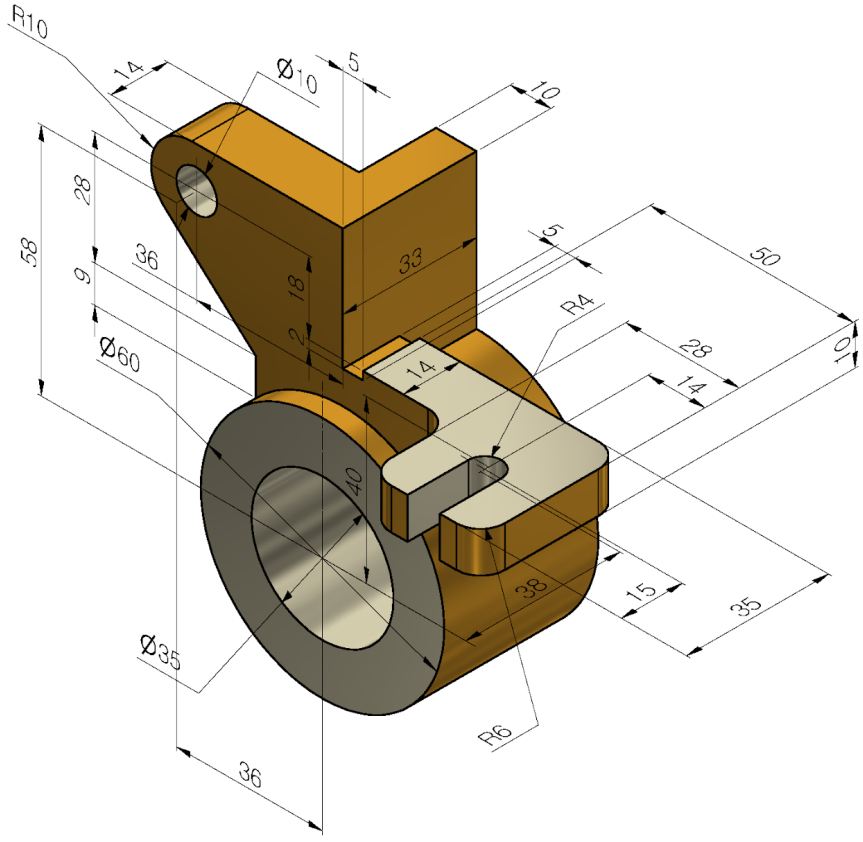

COPYRIGHT © 2020 WWW.STUDYCADCAM.COM ALL RIGHTS RESERVED.

3D EXERCISES

178

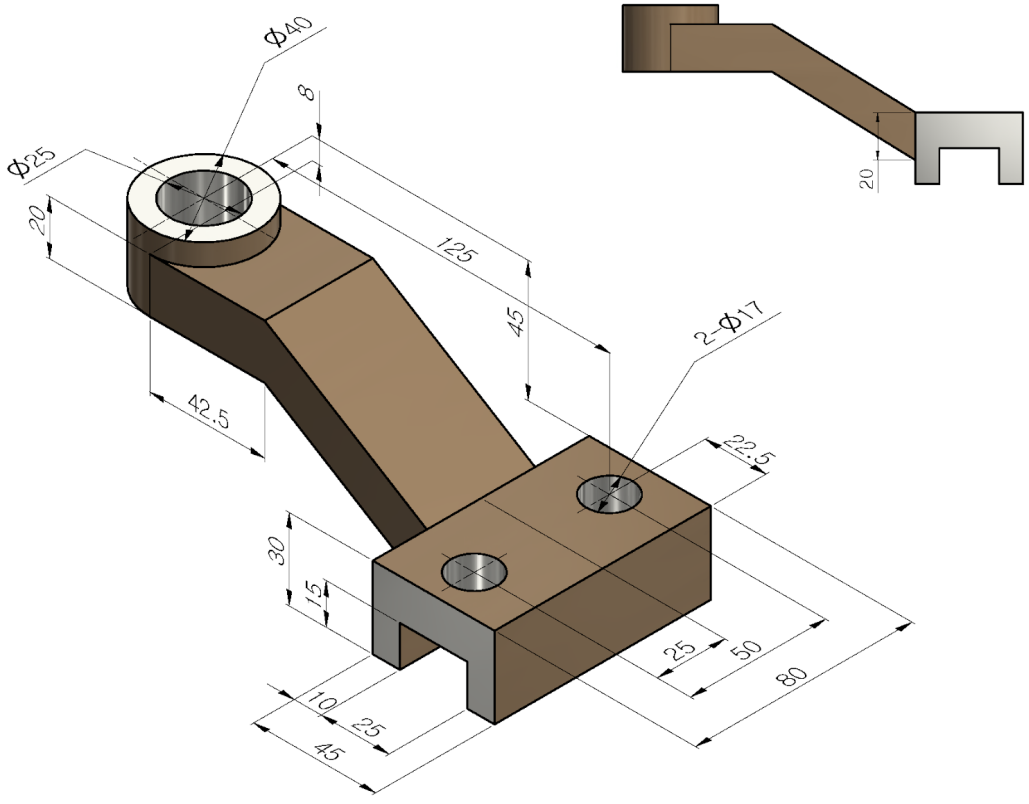

COPYRIGHT © 2020 WWW.STUDYCADCAM.COM ALL RIGHTS RESERVED.

3D EXERCISES

179

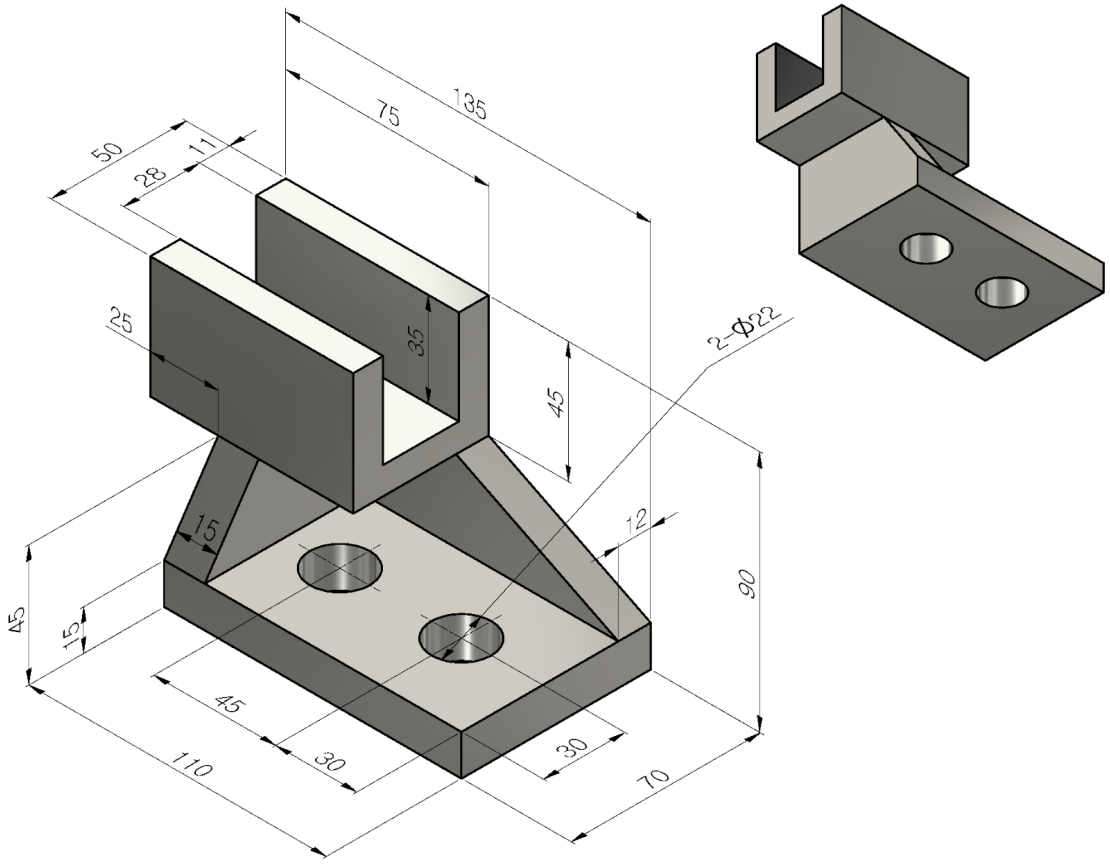

COPYRIGHT © 2020 WWW.STUDYCADCAM.COM ALL RIGHTS RESERVED.

3D EXERCISES

180

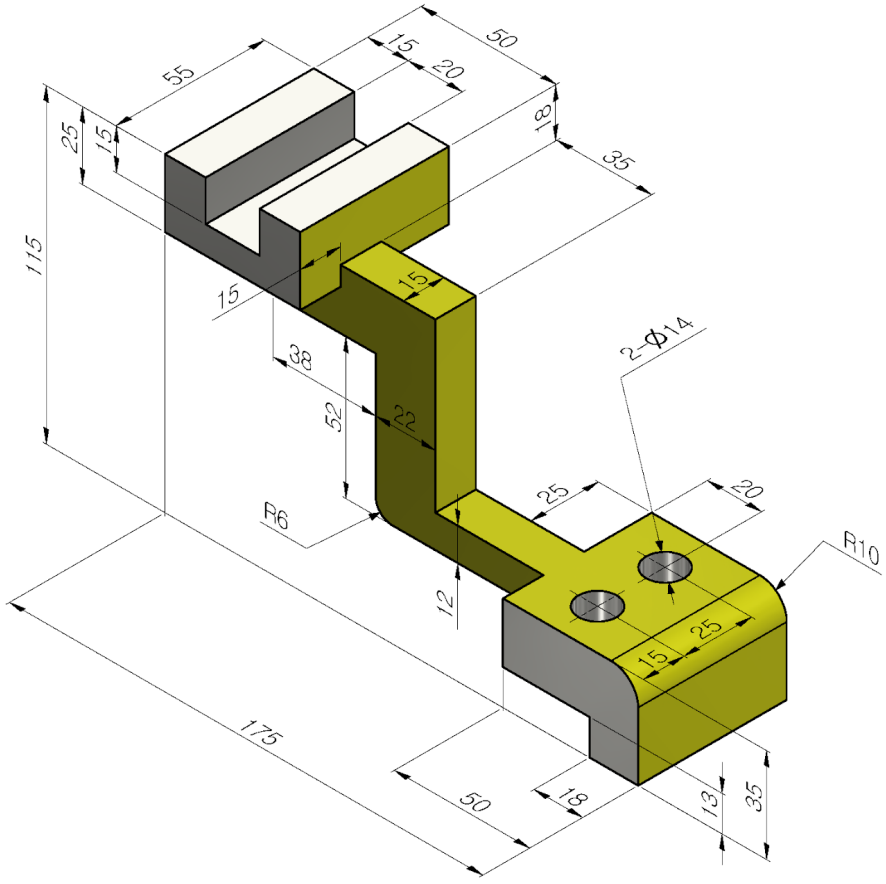

COPYRIGHT © 2020 WWW.STUDYCADCAM.COM ALL RIGHTS RESERVED.

3D EXERCISES

182

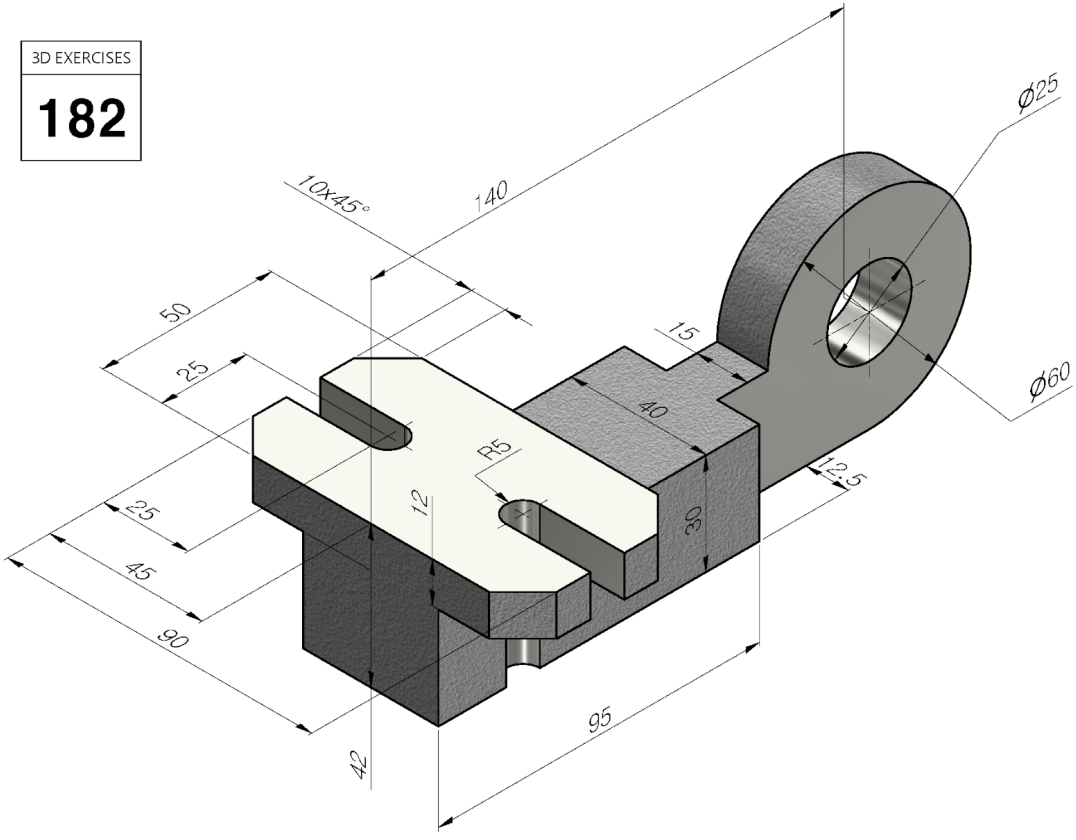

COPYRIGHT © 2020 WWW.STUDYCADCAM.COM ALL RIGHTS RESERVED.

3D EXERCISES

192

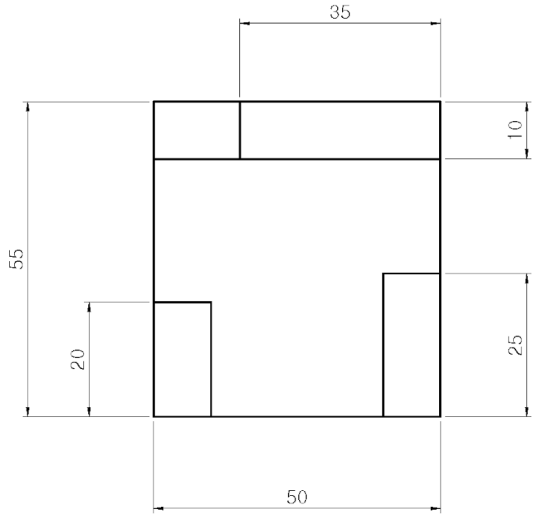

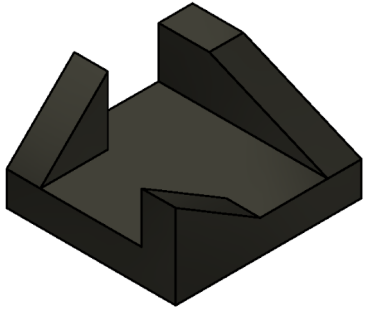

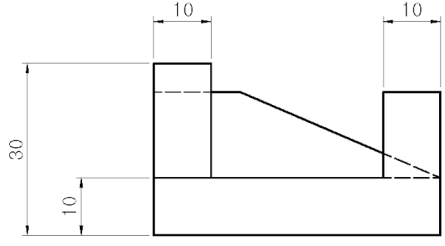

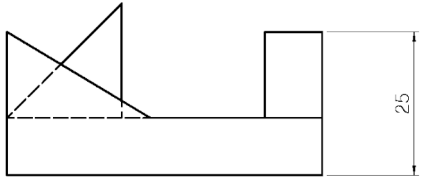

COPYRIGHT © 2020 WWW.STUDYCADCAM.COM ALL RIGHTS RESERVED.

3D EXERCISES

193

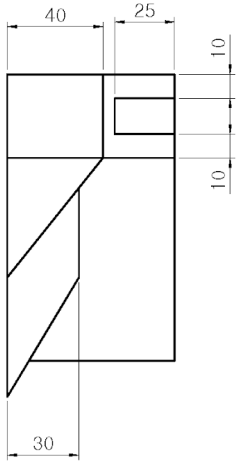

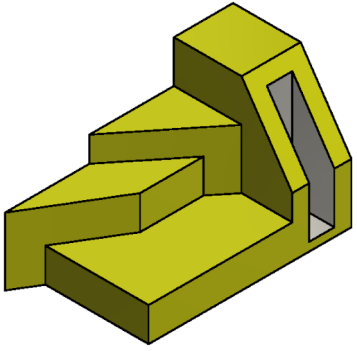

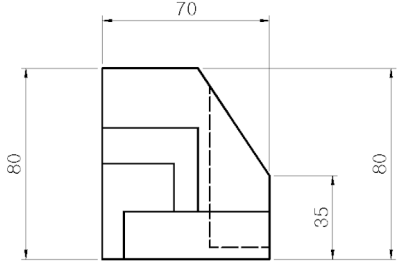

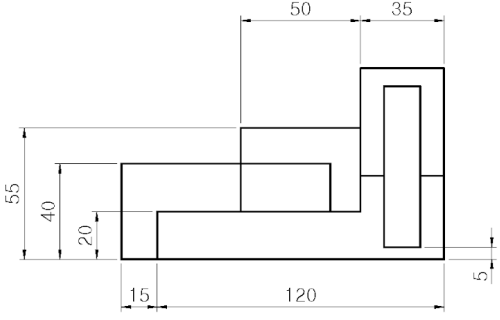

COPYRIGHT © 2020 WWW.STUDYCADCAM.COM ALL RIGHTS RESERVED.

3D EXERCISES

195

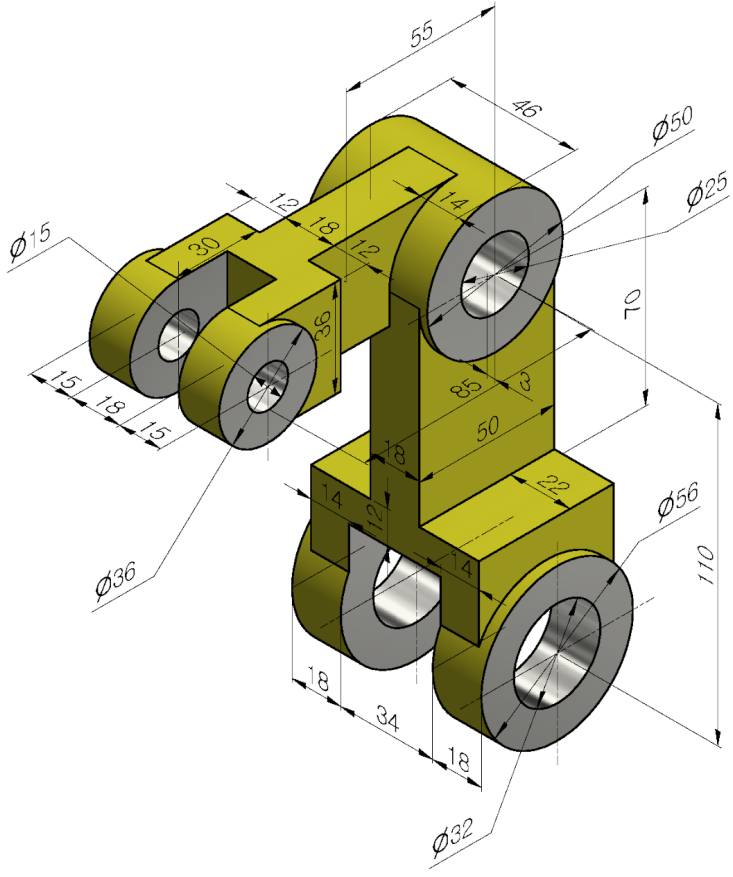

COPYRIGHT © 2020 WWW.STUDYCADCAM.COM ALL RIGHTS RESERVED.

3D EXERCISES

236

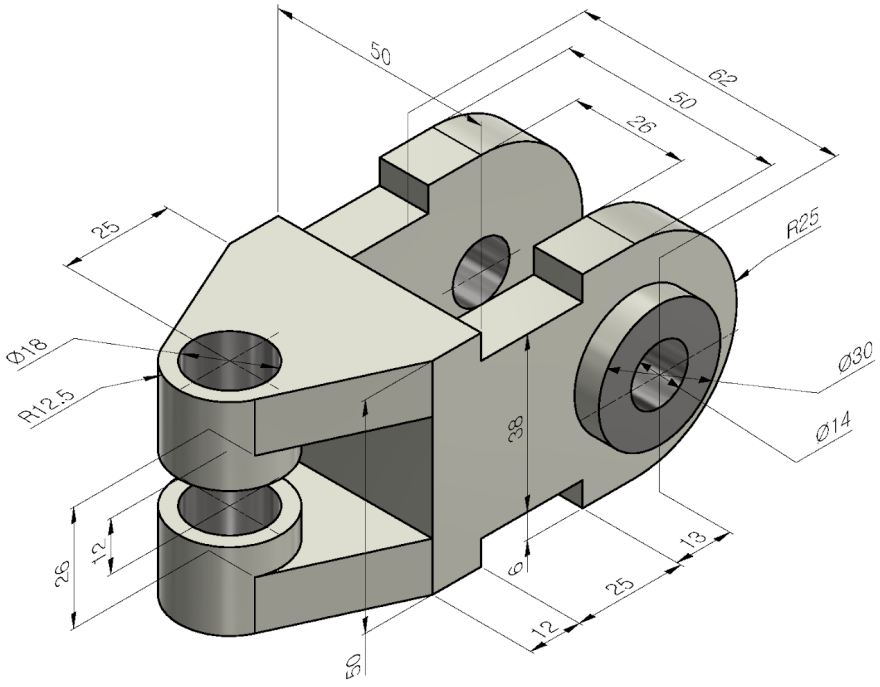

COPYRIGHT © 2020 **WWW.STUDYCADCAM.COM** ALL RIGHTS RESERVED.

3D EXERCISES

256

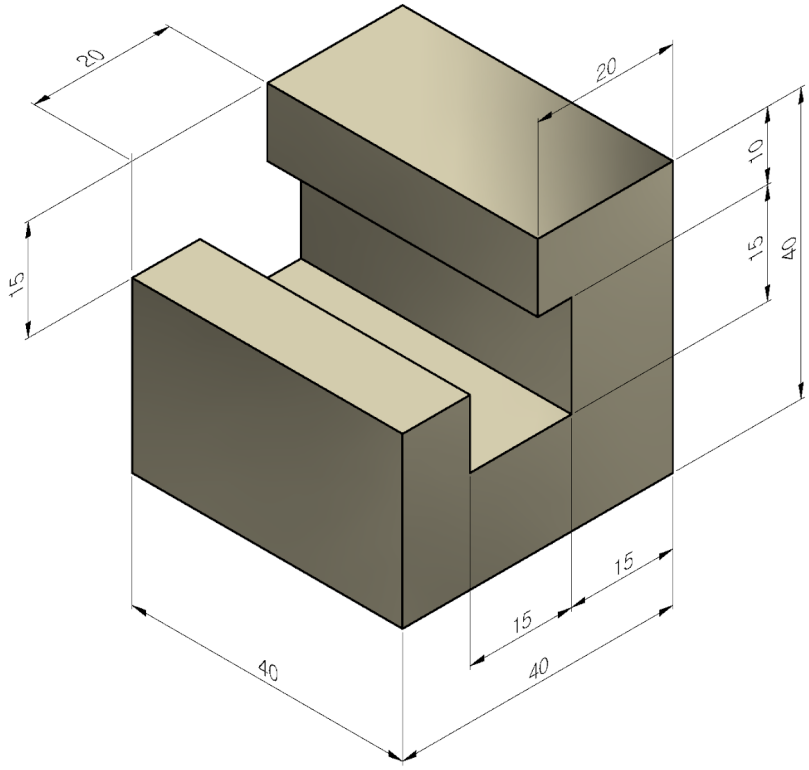

COPYRIGHT © 2020 WWW.STUDYCADCAM.COM ALL RIGHTS RESERVED.

3D EXERCISES

269

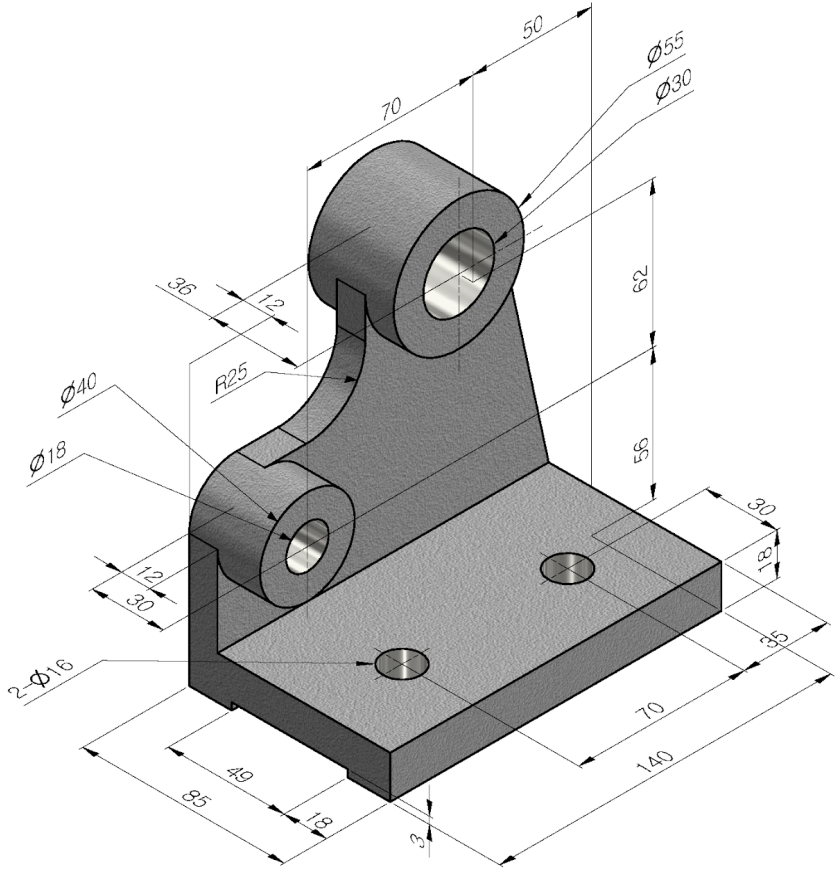

COPYRIGHT © 2020 WWW.STUDYCADCAM.COM ALL RIGHTS RESERVED.

3D EXERCISES

270

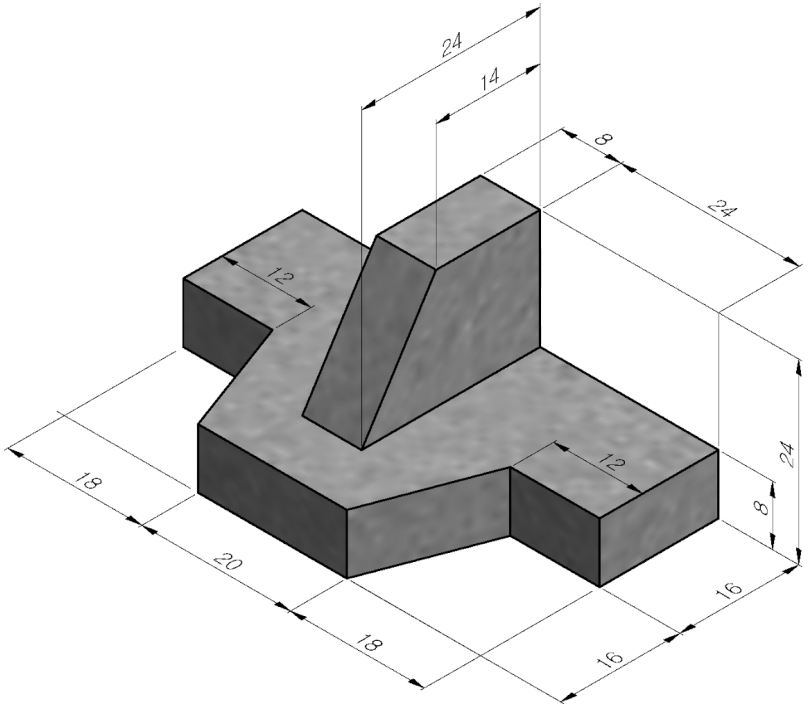

COPYRIGHT © 2020 WWW.STUDYCADCAM.COM ALL RIGHTS RESERVED.

3D EXERCISES

271

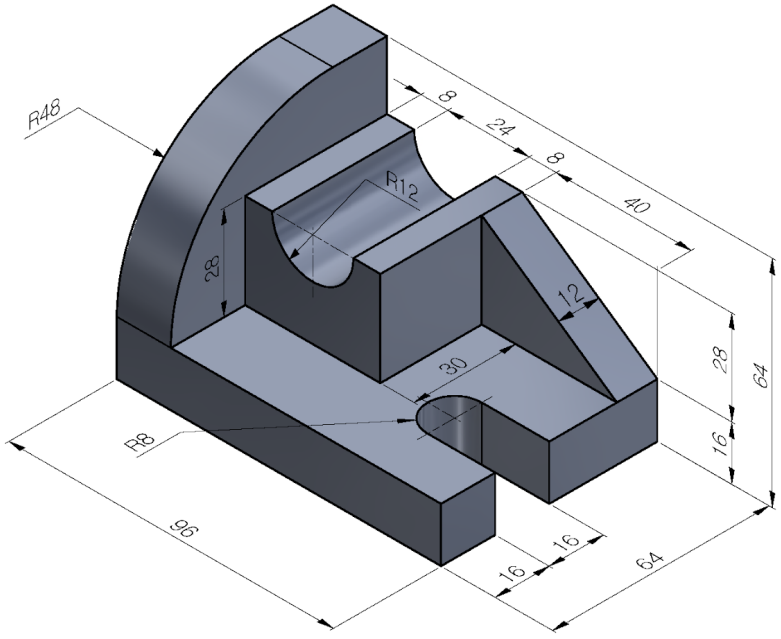

COPYRIGHT © 2020 WWW.STUDYCADCAM.COM ALL RIGHTS RESERVED.

3D EXERCISES

335

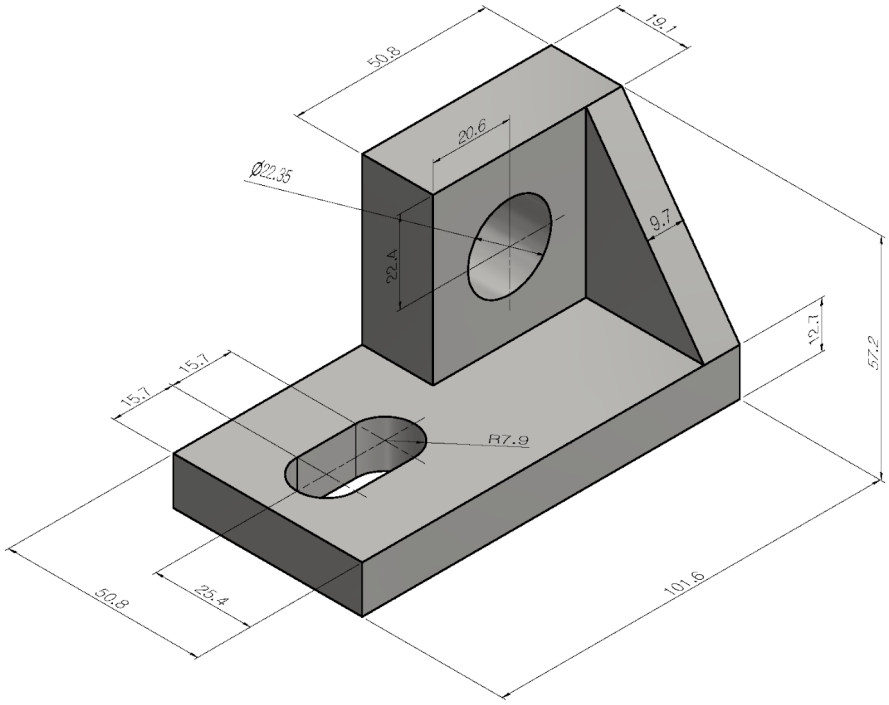

COPYRIGHT © 2020 **WWW.STUDYCADCAM.COM** ALL RIGHTS RESERVED.

3D EXERCISES

336

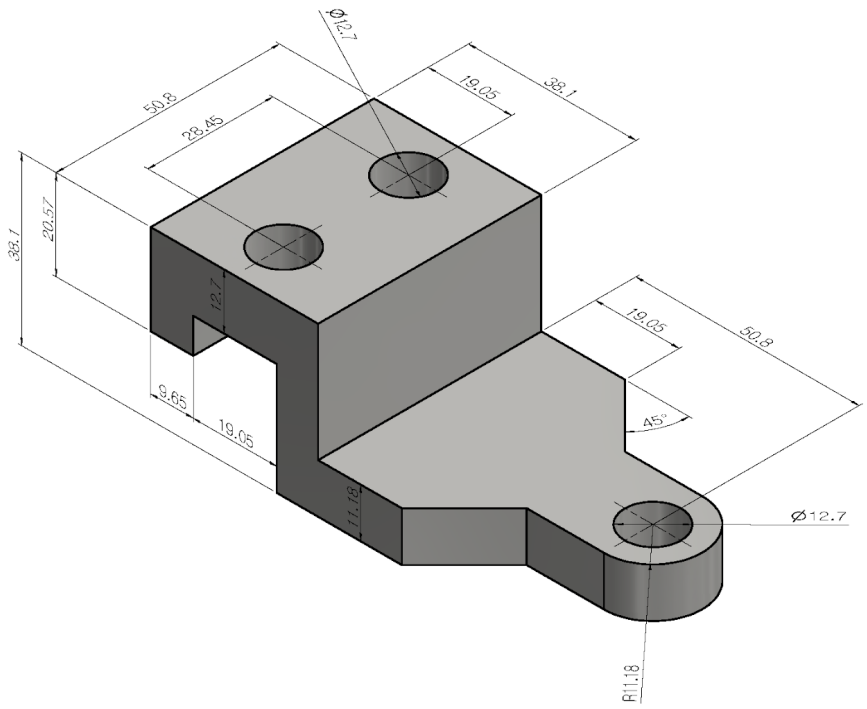

COPYRIGHT © 2020 **WWW.STUDYCADCAM.COM** ALL RIGHTS RESERVED.

3D EXERCISES

338

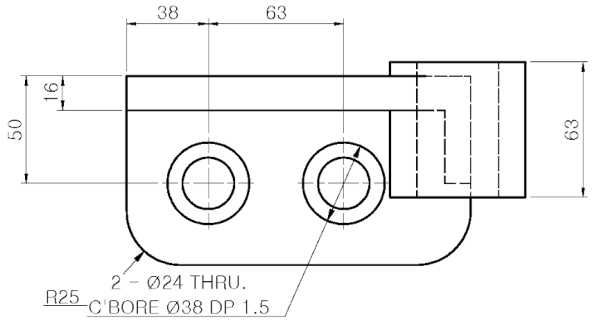

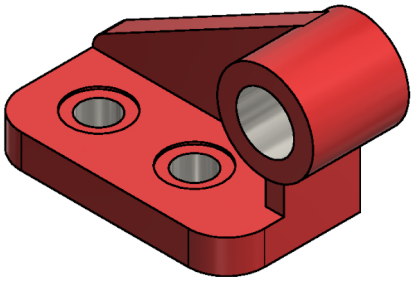

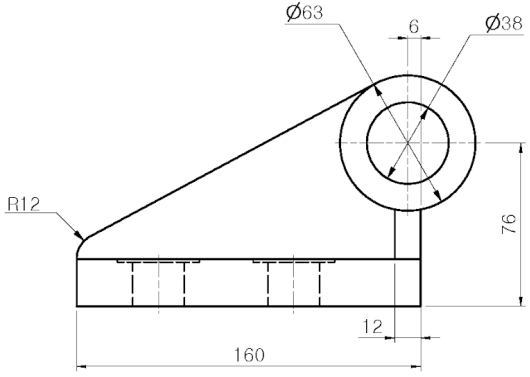

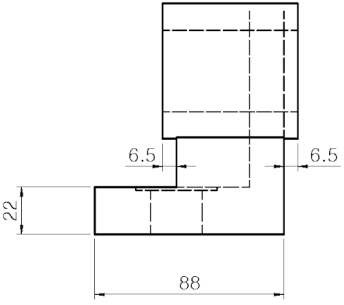

COPYRIGHT © 2020 WWW.STUDYCADCAM.COM ALL RIGHTS RESERVED.

3D EXERCISES

402

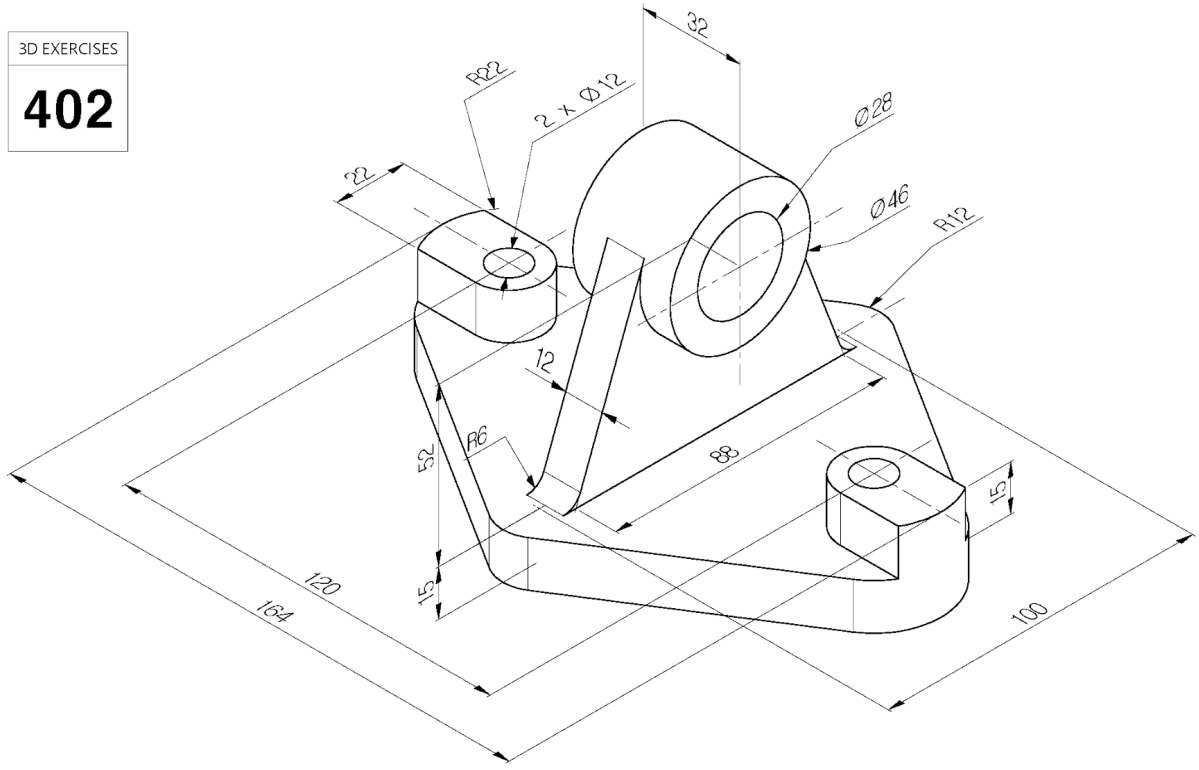

COPYRIGHT © 2020 **WWW.STUDYCADCAM.COM** ALL RIGHTS RESERVED.

3D EXERCISES

412

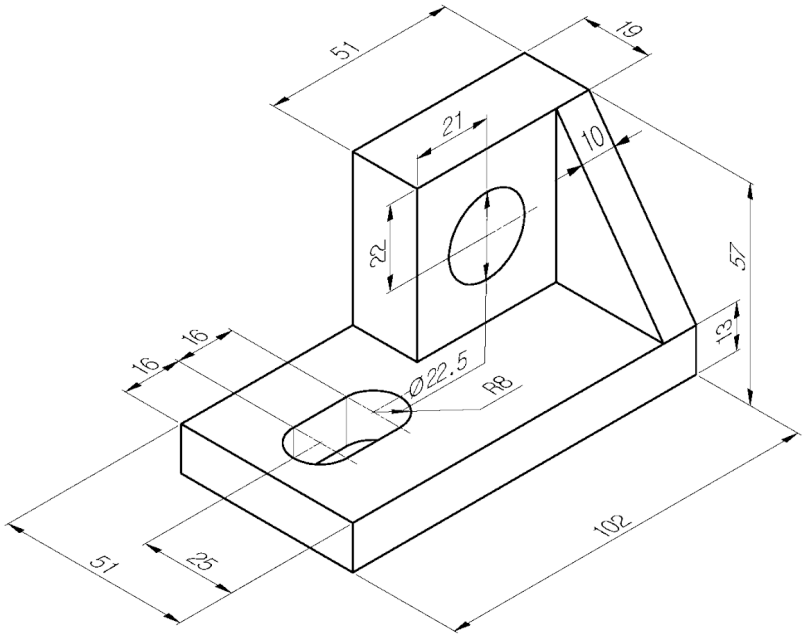

COPYRIGHT © 2020 WWW.STUDYCADCAM.COM ALL RIGHTS RESERVED.

3D EXERCISES

413

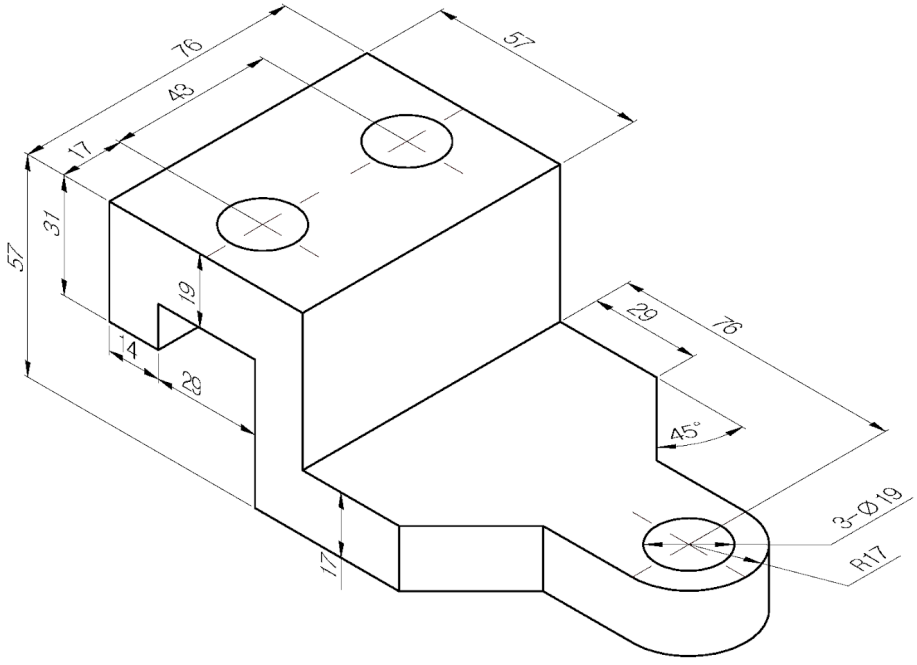

COPYRIGHT © 2020 WWW.STUDYCADCAM.COM ALL RIGHTS RESERVED.

3D EXERCISES

414

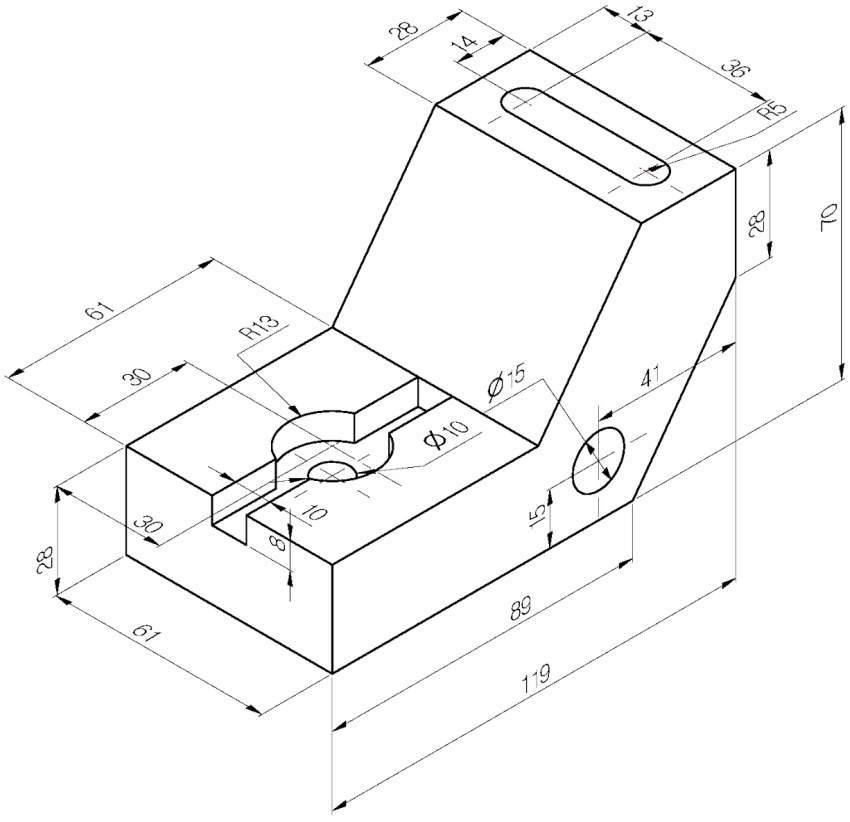

COPYRIGHT © 2020 WWW.STUDYCADCAM.COM ALL RIGHTS RESERVED.

3D EXERCISES

439

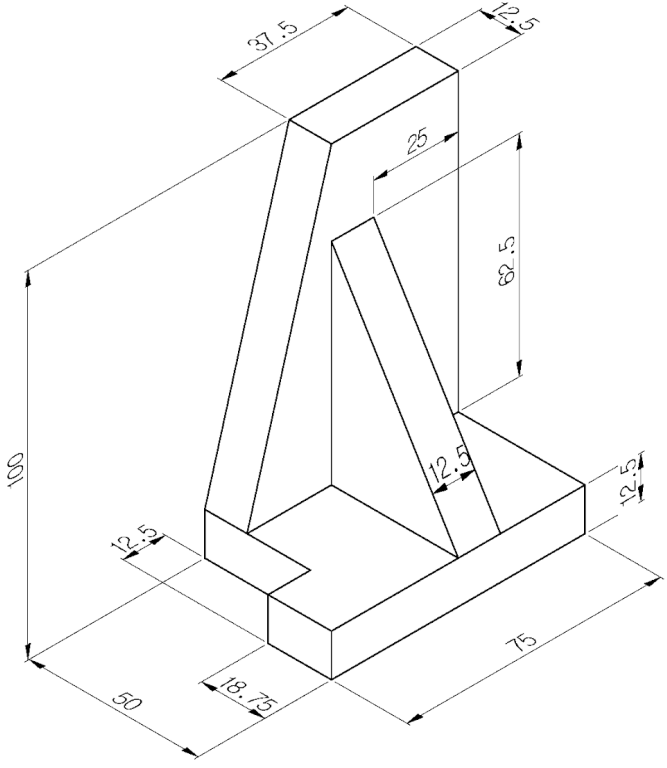

COPYRIGHT © 2020 WWW.STUDYCADCAM.COM ALL RIGHTS RESERVED.

3D EXERCISES

440

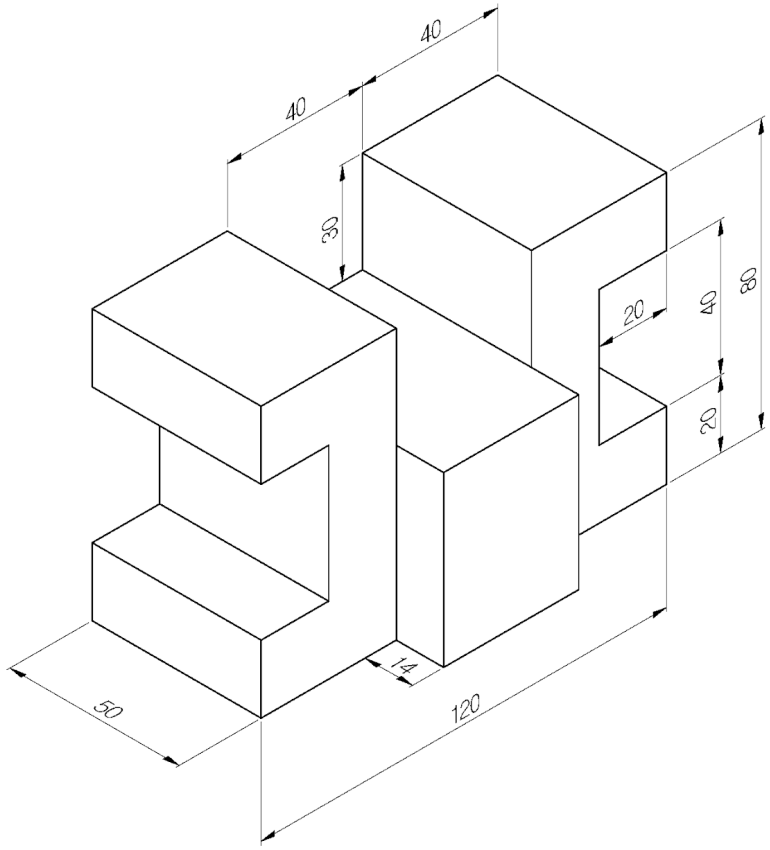

COPYRIGHT © 2020 WWW.STUDYCADCAM.COM ALL RIGHTS RESERVED.

3D EXERCISES

447

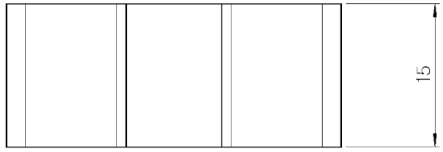

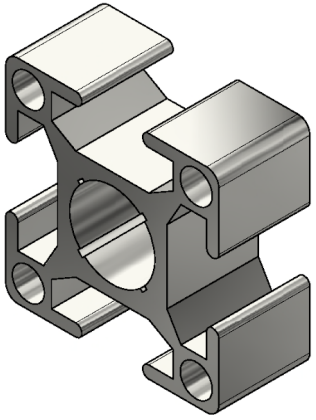

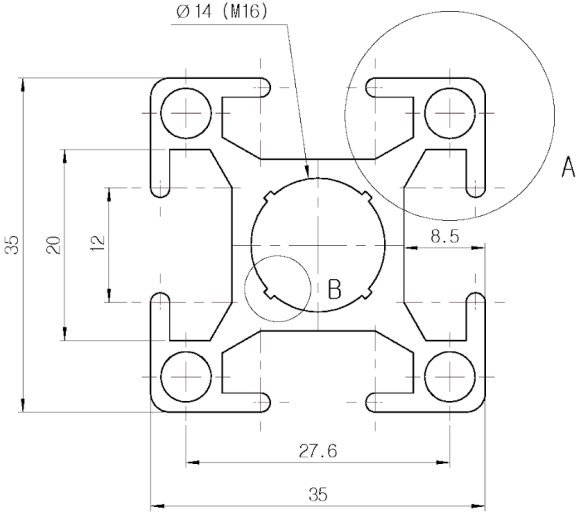

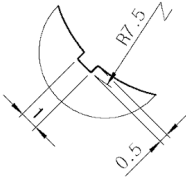

B (4 : 1)

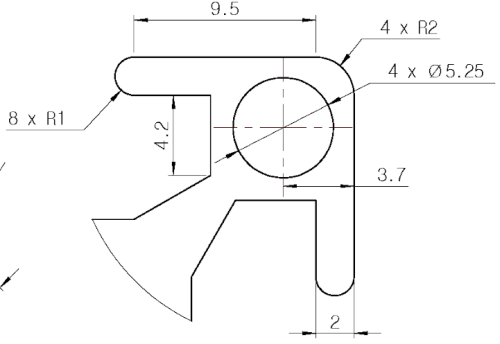

A (4 : 1)

COPYRIGHT © 2020 WWW.STUDYCADCAM.COM ALL RIGHTS RESERVED.

3D EXERCISES

451

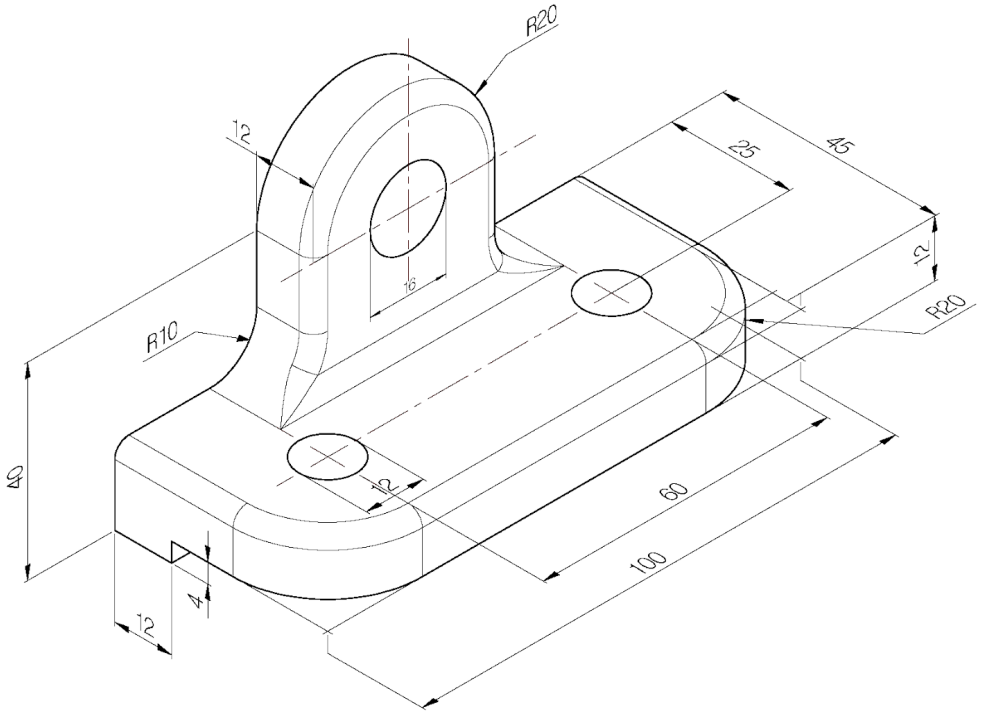

주 서

1. 도시되고 지시없는 모서리는
R3

COPYRIGHT © 2020 WWW.STUDYCADCAM.COM ALL RIGHTS RESERVED.

3D EXERCISES

452

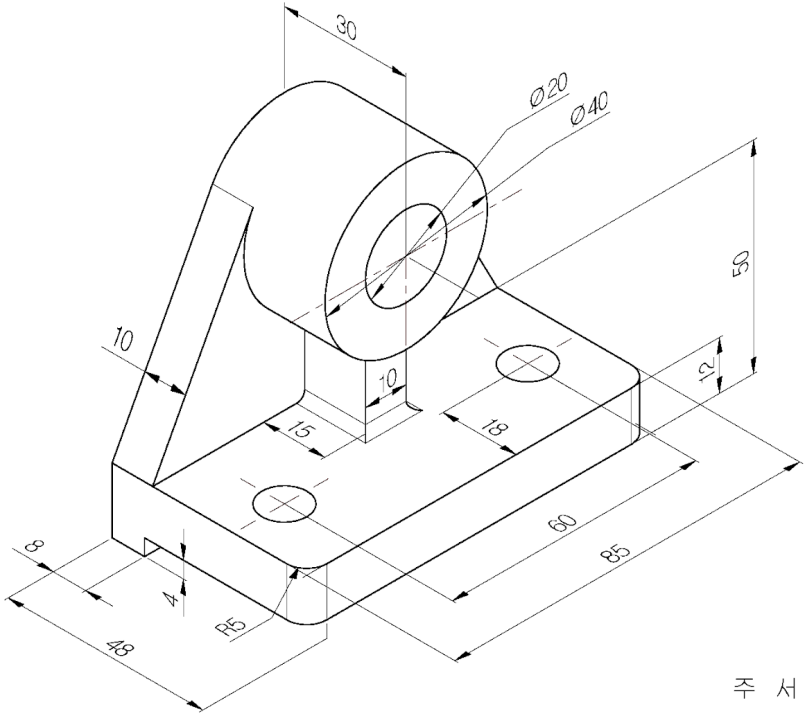

주 서

1. 도시되고 지시없는 모서리는 R2

COPYRIGHT © 2020 WWW.STUDYCADCAM.COM ALL RIGHTS RESERVED.

3D EXERCISES

607

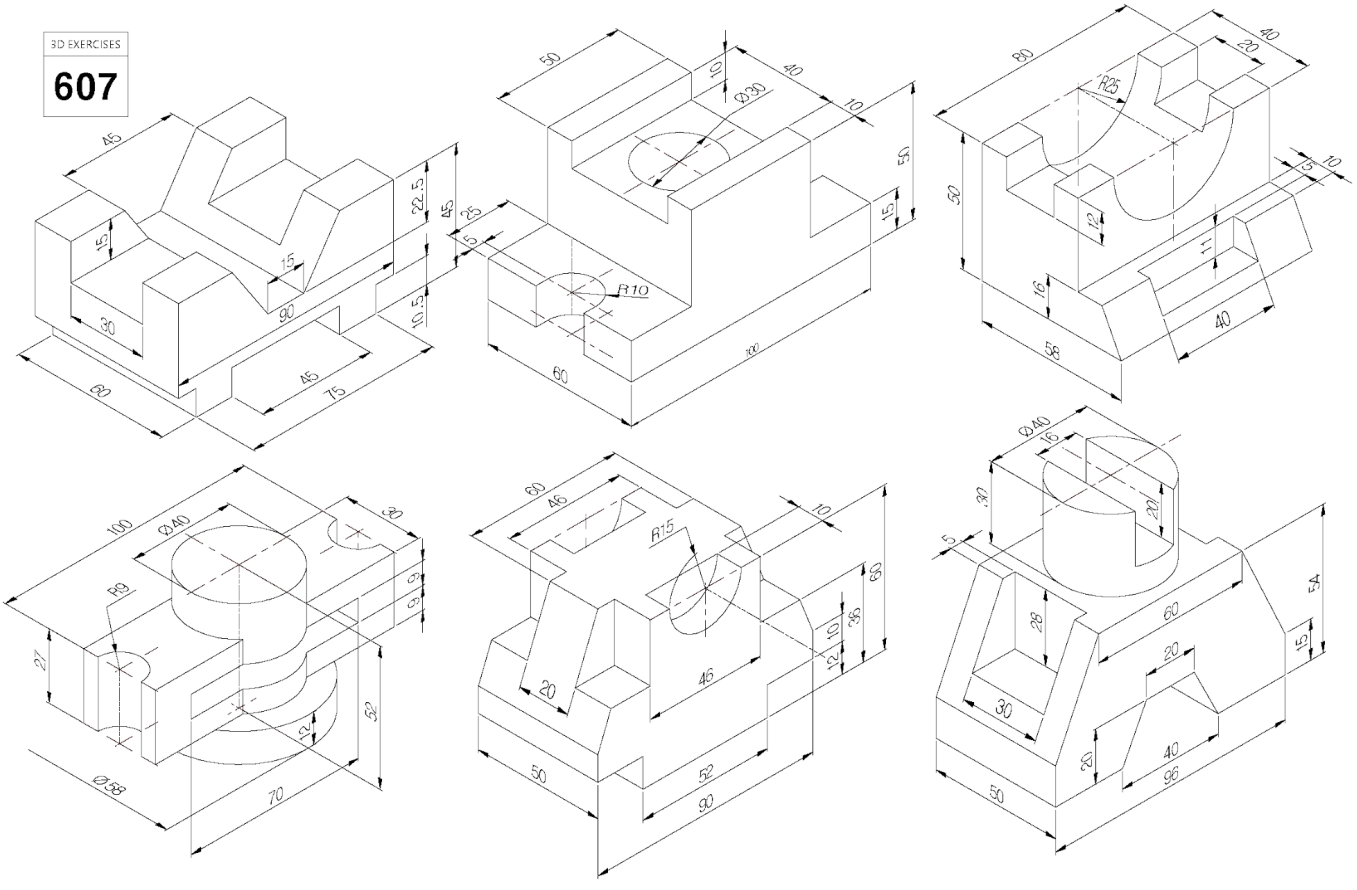

COPYRIGHT © 2020 WWW.STUDYCADCAM.COM ALL RIGHTS RESERVED.

3D EXERCISES

608

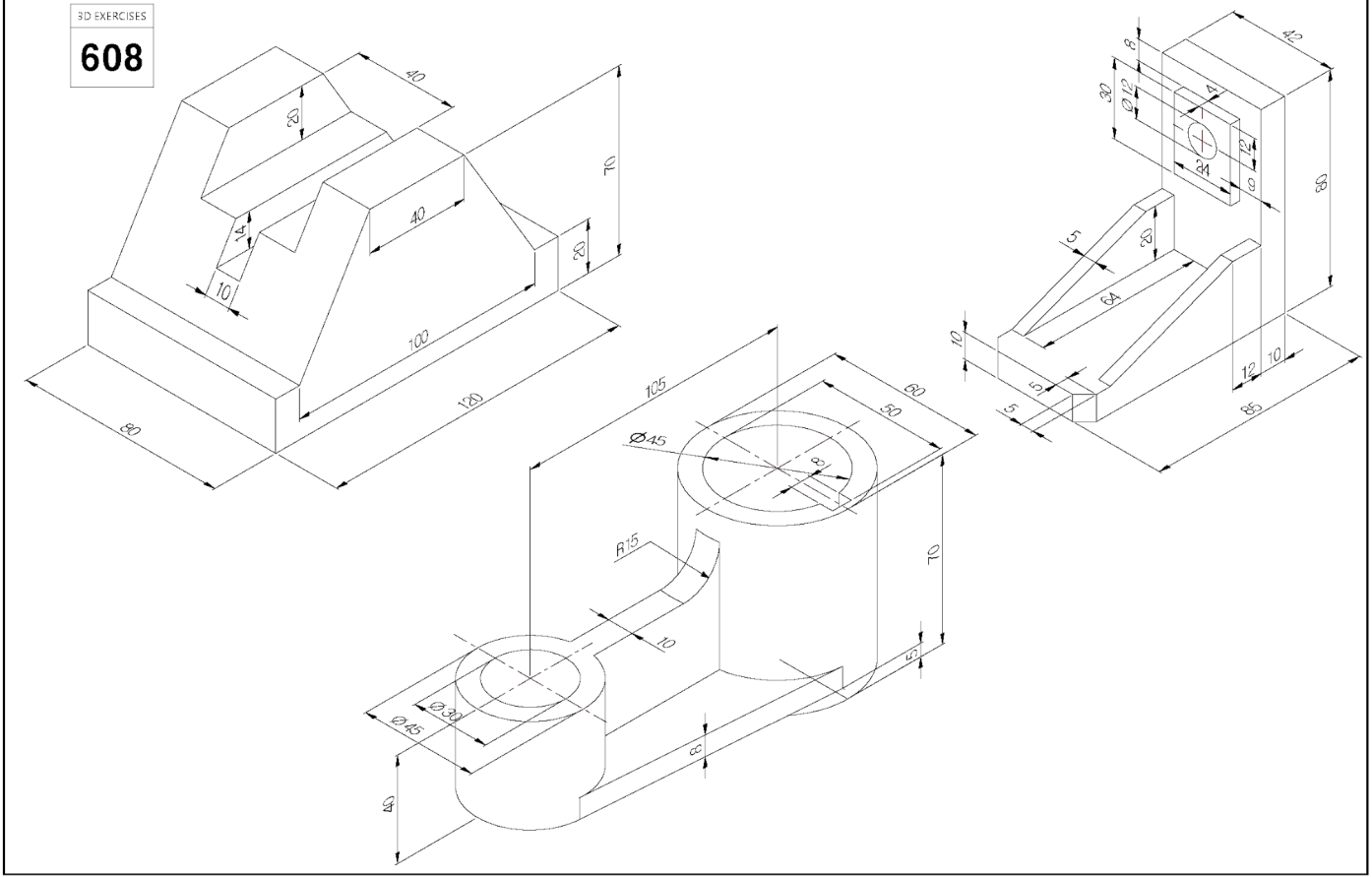

COPYRIGHT © 2020 WWW.STUDYCADCAM.COM ALL RIGHTS RESERVED.

3D EXERCISES

610

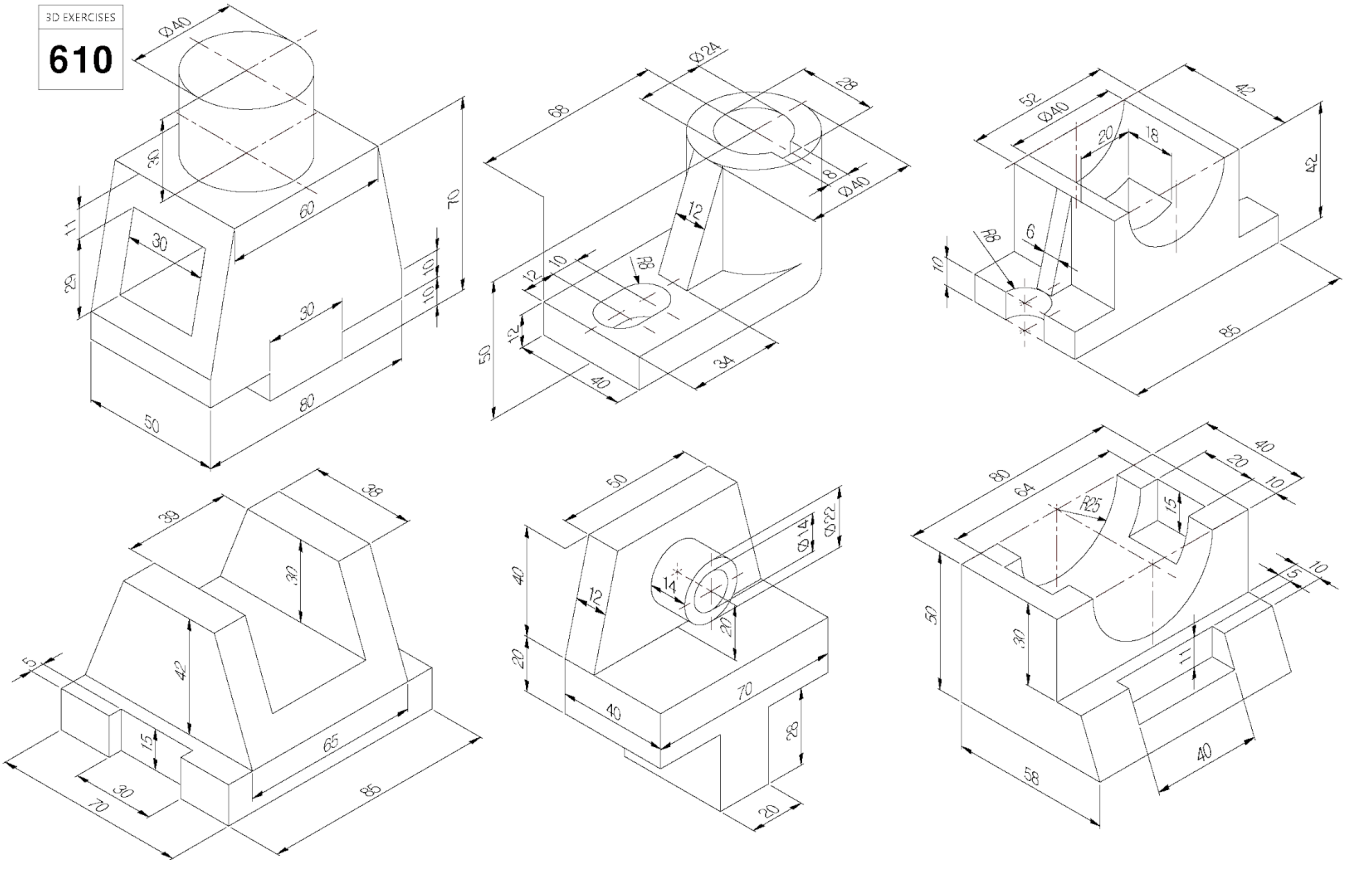

COPYRIGHT © 2020 WWW.STUDYCADCAM.COM ALL RIGHTS RESERVED.

3D EXERCISES

611

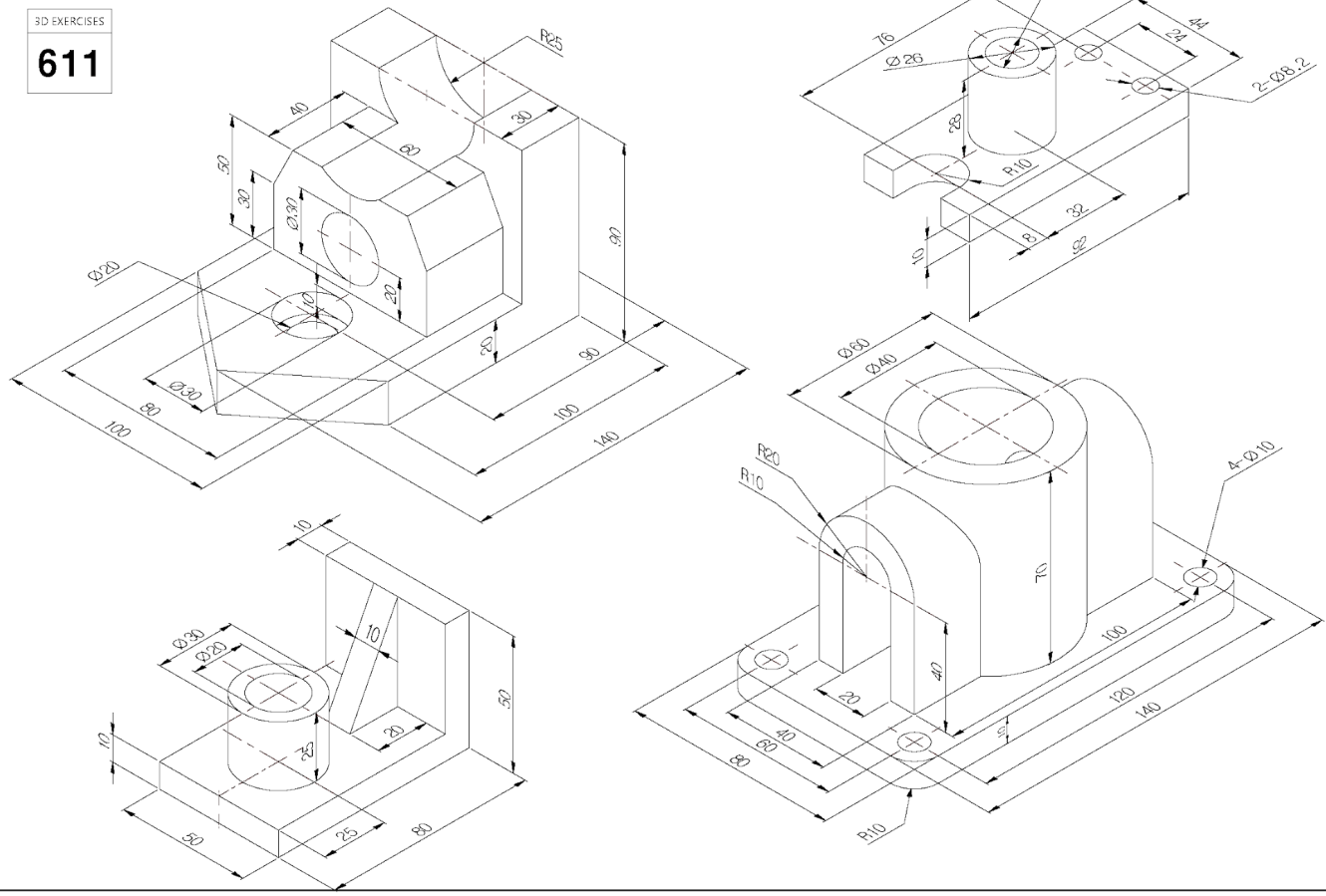

COPYRIGHT © 2020 WWW.STUDYCADCAM.COM ALL RIGHTS RESERVED.

3D EXERCISES

616

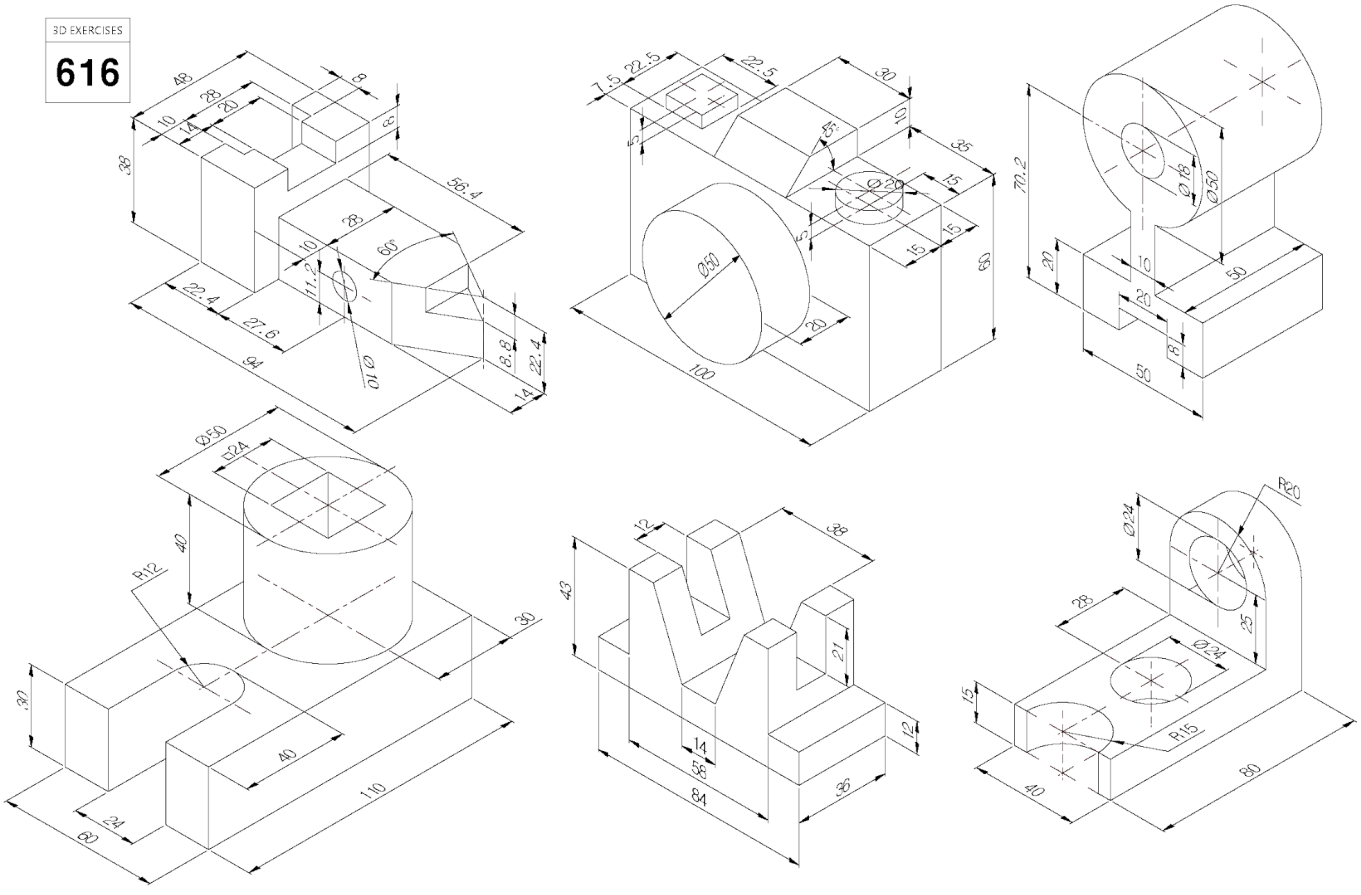

COPYRIGHT © 2020 WWW.STUDYCADCAM.COM ALL RIGHTS RESERVED.

3D EXERCISES

617

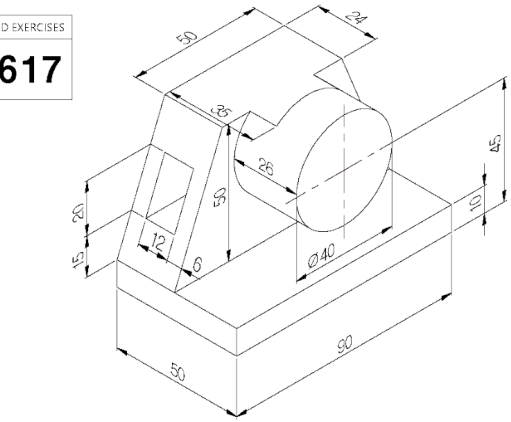

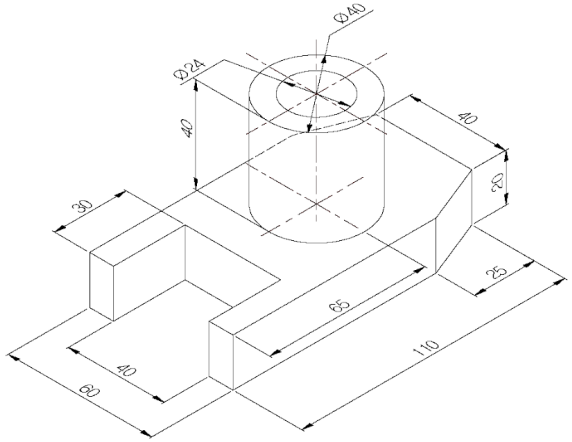

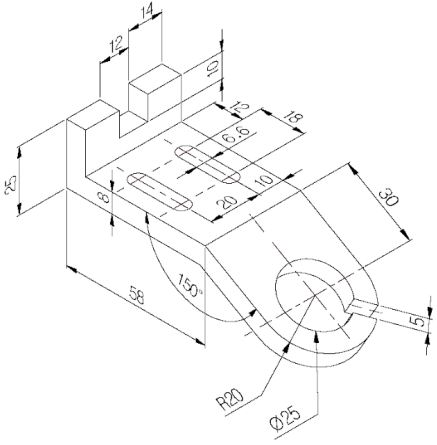

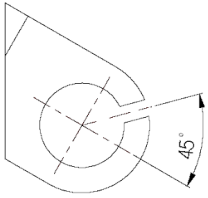

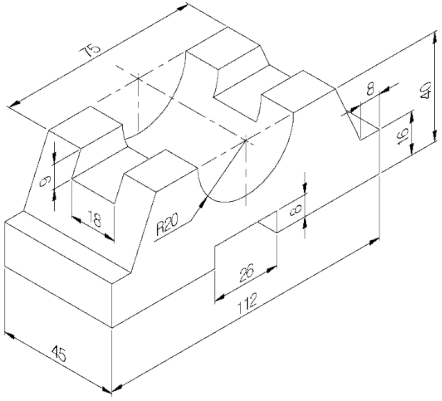

COPYRIGHT © 2020 WWW.STUDYCADCAM.COM ALL RIGHTS RESERVED.

3D EXERCISES

621

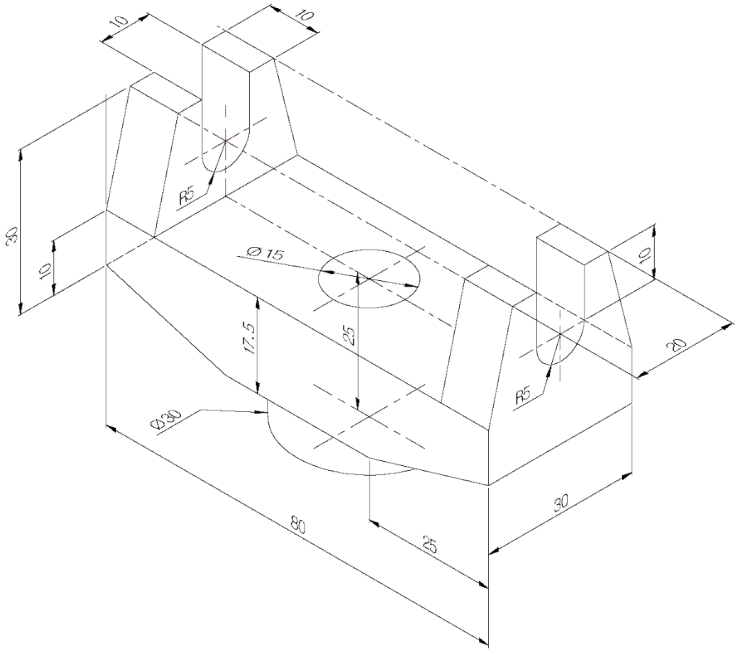

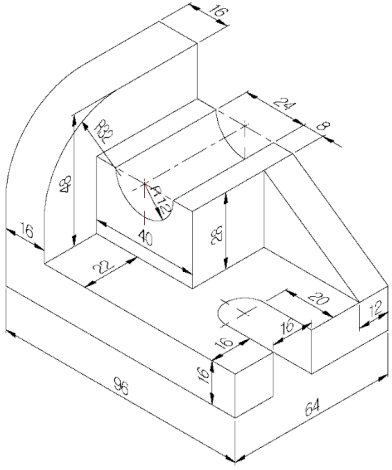

COPYRIGHT © 2020 WWW.STUDYCADCAM.COM ALL RIGHTS RESERVED.

3D EXERCISES

622

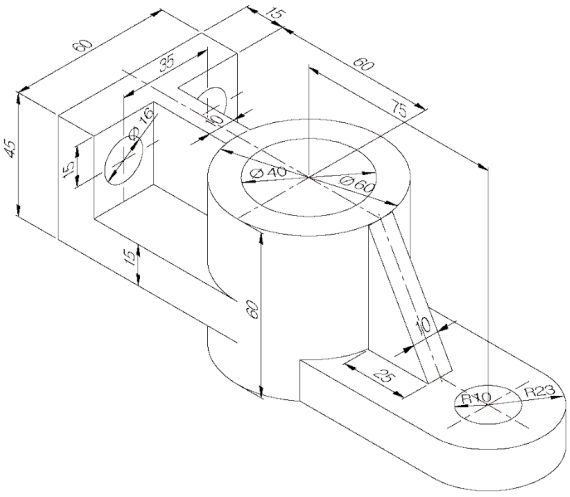

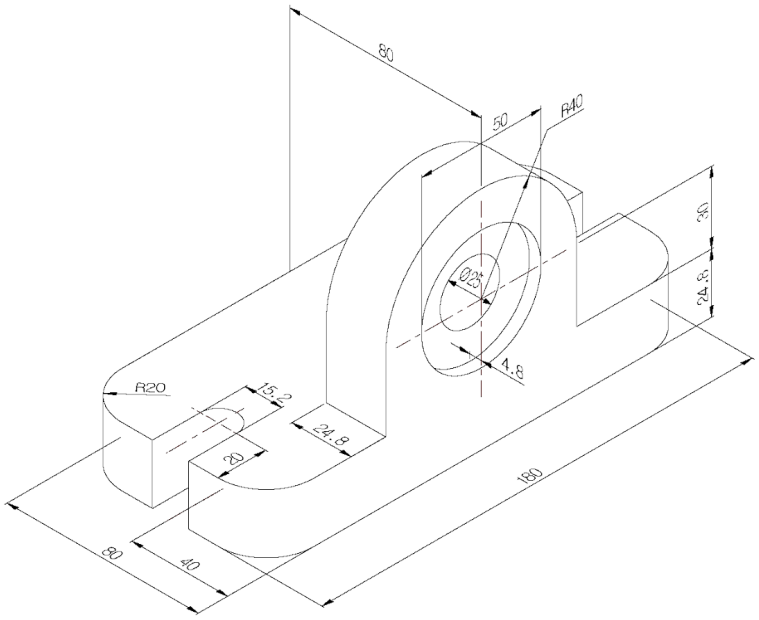

COPYRIGHT © 2020 WWW.STUDYCADCAM.COM ALL RIGHTS RESERVED.

3D EXERCISES

624

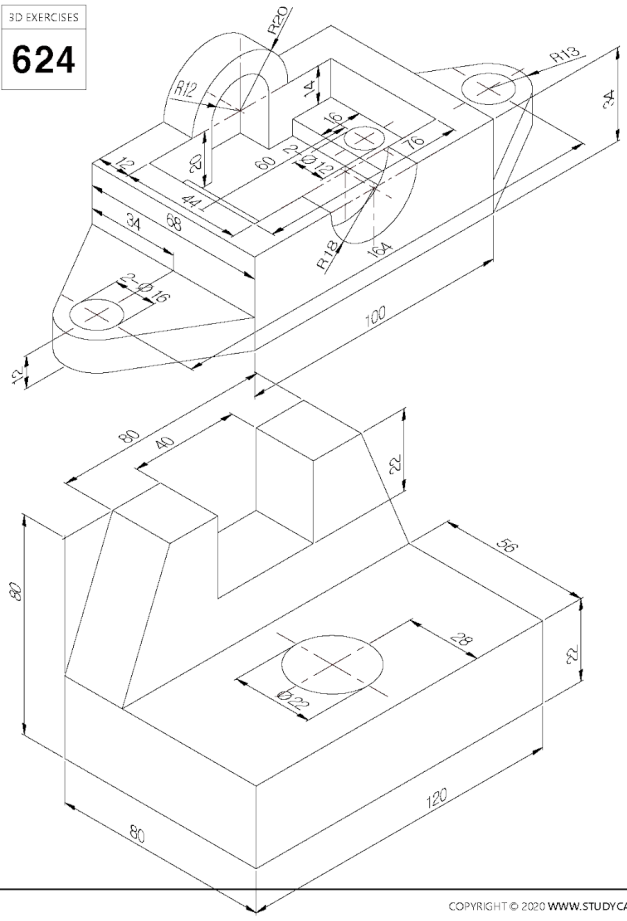

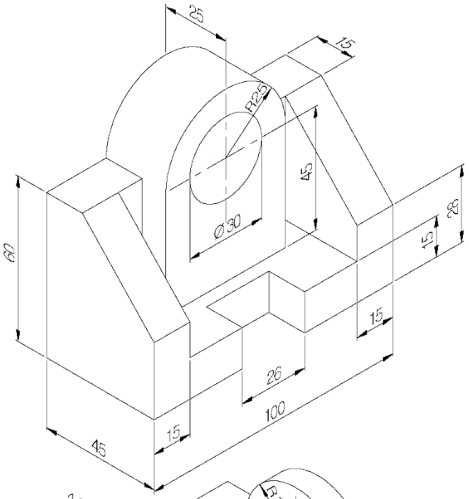

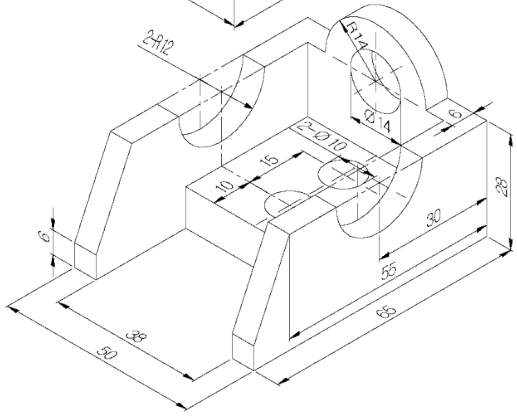

COPYRIGHT © 2020 WWW.STUDYCADCAM.COM ALL RIGHTS RESERVED.

3D EXERCISES

625

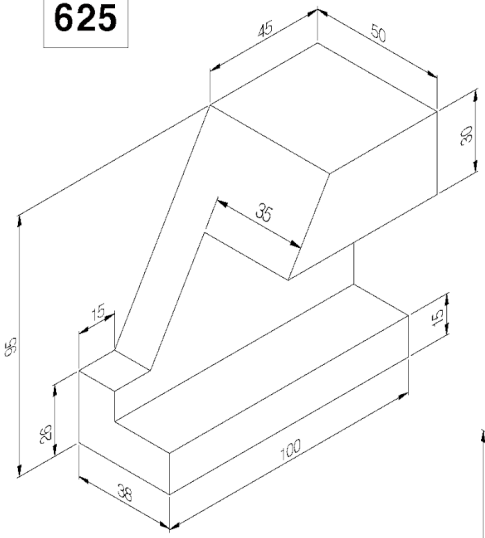

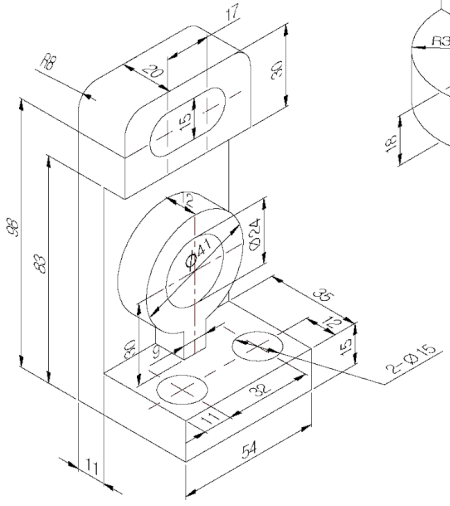

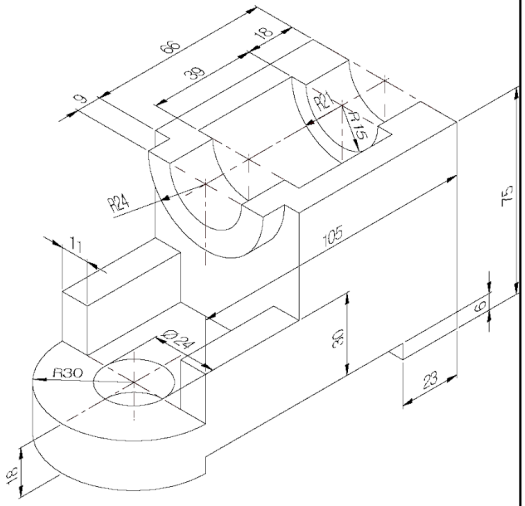

COPYRIGHT © 2020 WWW.STUDYCADCAM.COM ALL RIGHTS RESERVED.

3D EXERCISES

626

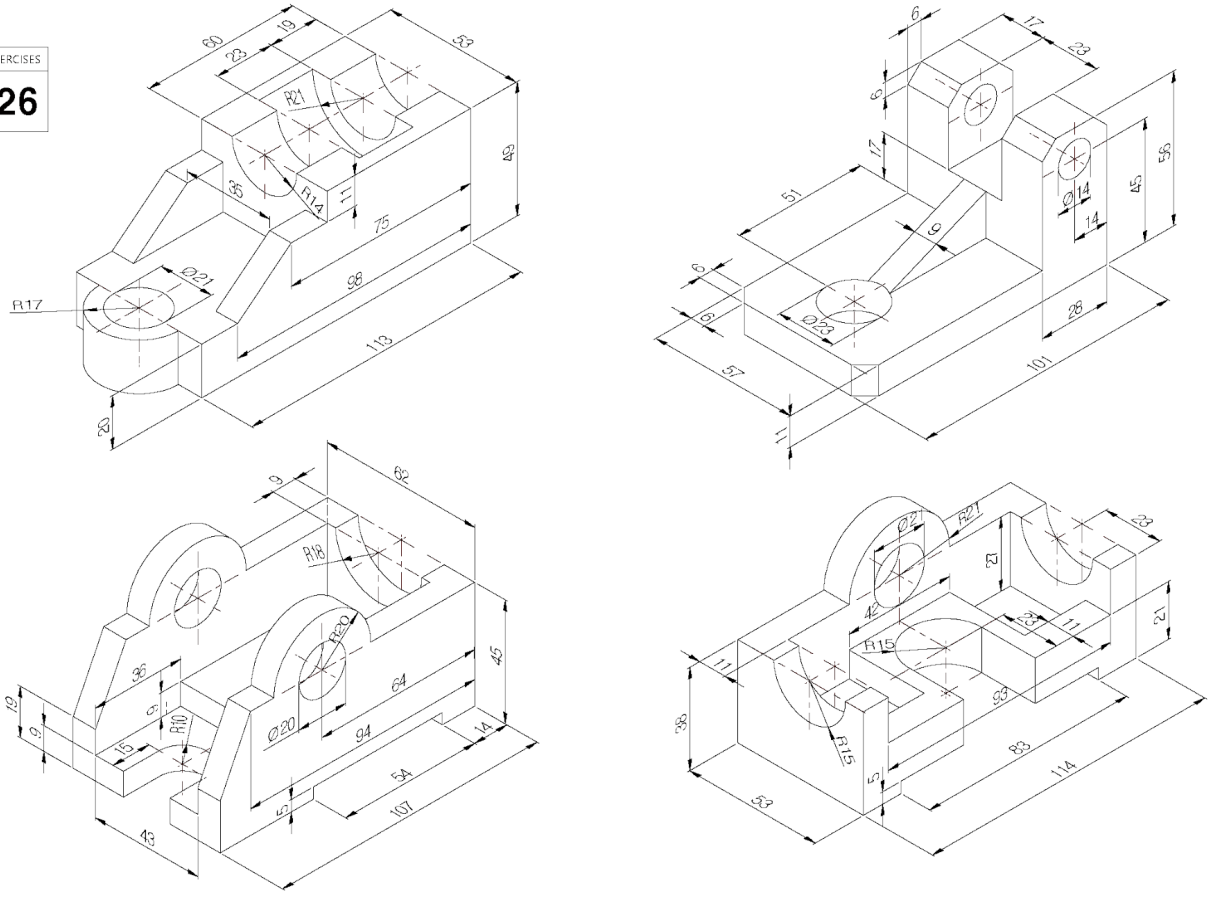

COPYRIGHT © 2020 WWW.STUDYCADCAM.COM ALL RIGHTS RESERVED.

3D EXERCISES

652

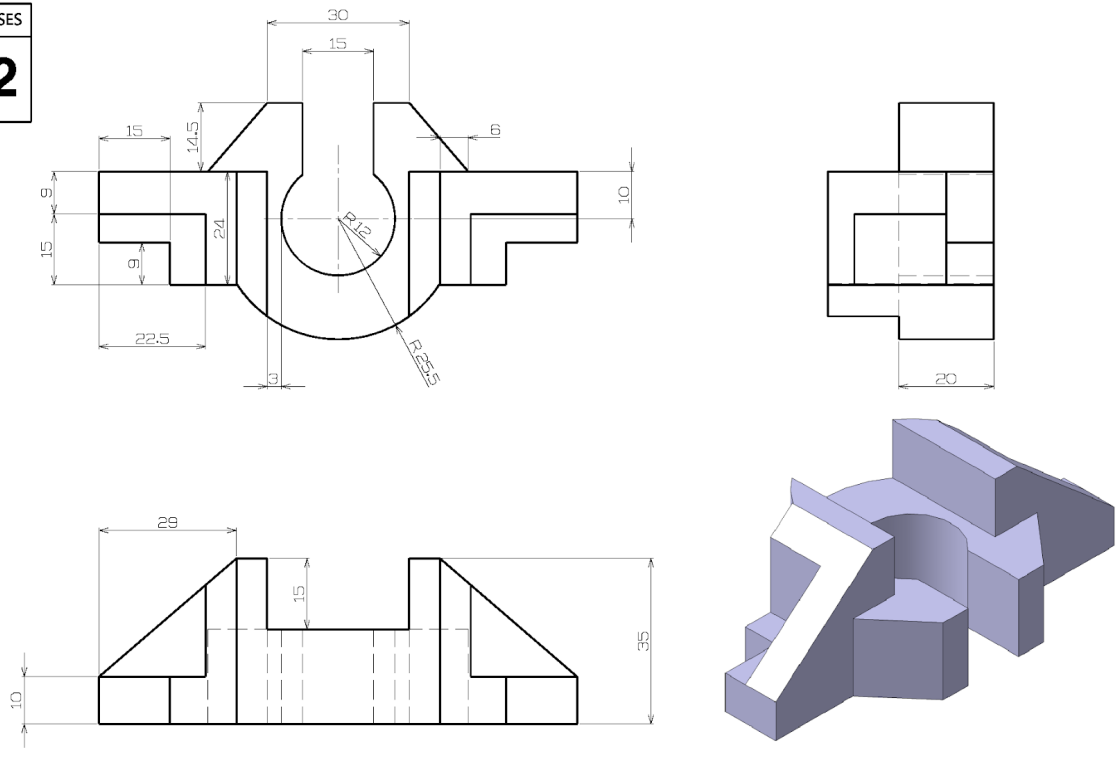

COPYRIGHT © 2020 **WWW.STUDYCADCAM.COM** ALL RIGHTS RESERVED.

3D EXERCISES

750

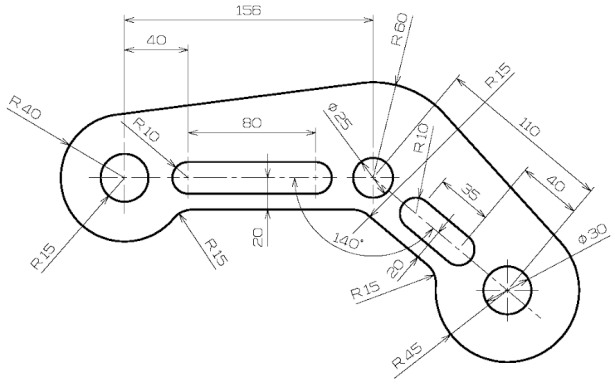

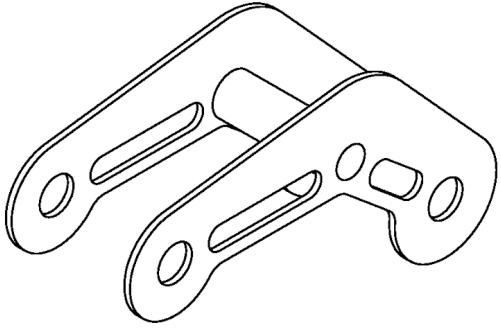

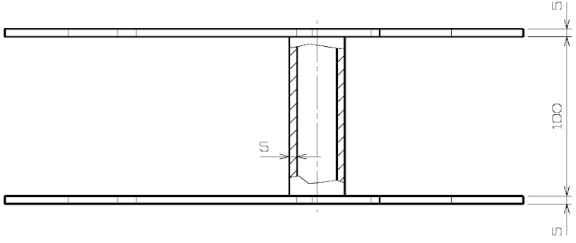

COPYRIGHT 2020 **WWW.STUDYCADCAM.COM** ALL RIGHTS RESERVED.

3D EXERCISES

770

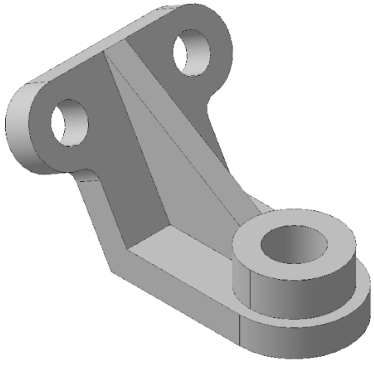

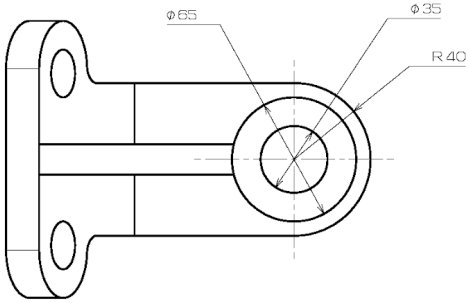

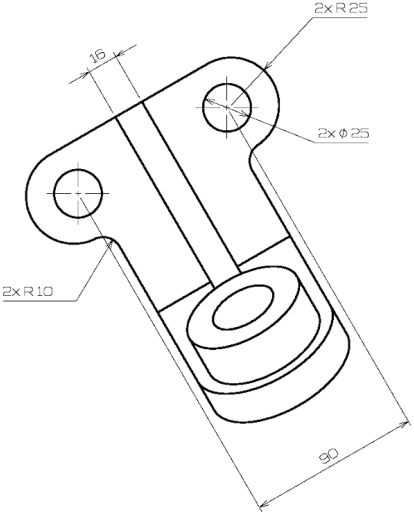

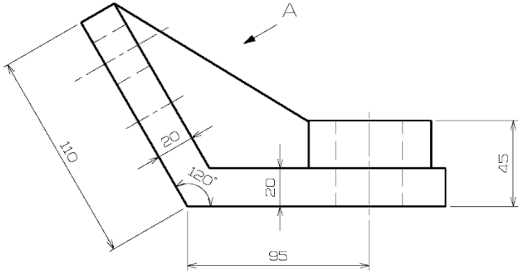

VIEW A

COPYRIGHT 2020 **WWW.STUDYCADCAM.COM** ALL RIGHTS RESERVED.

3D EXERCISES

773

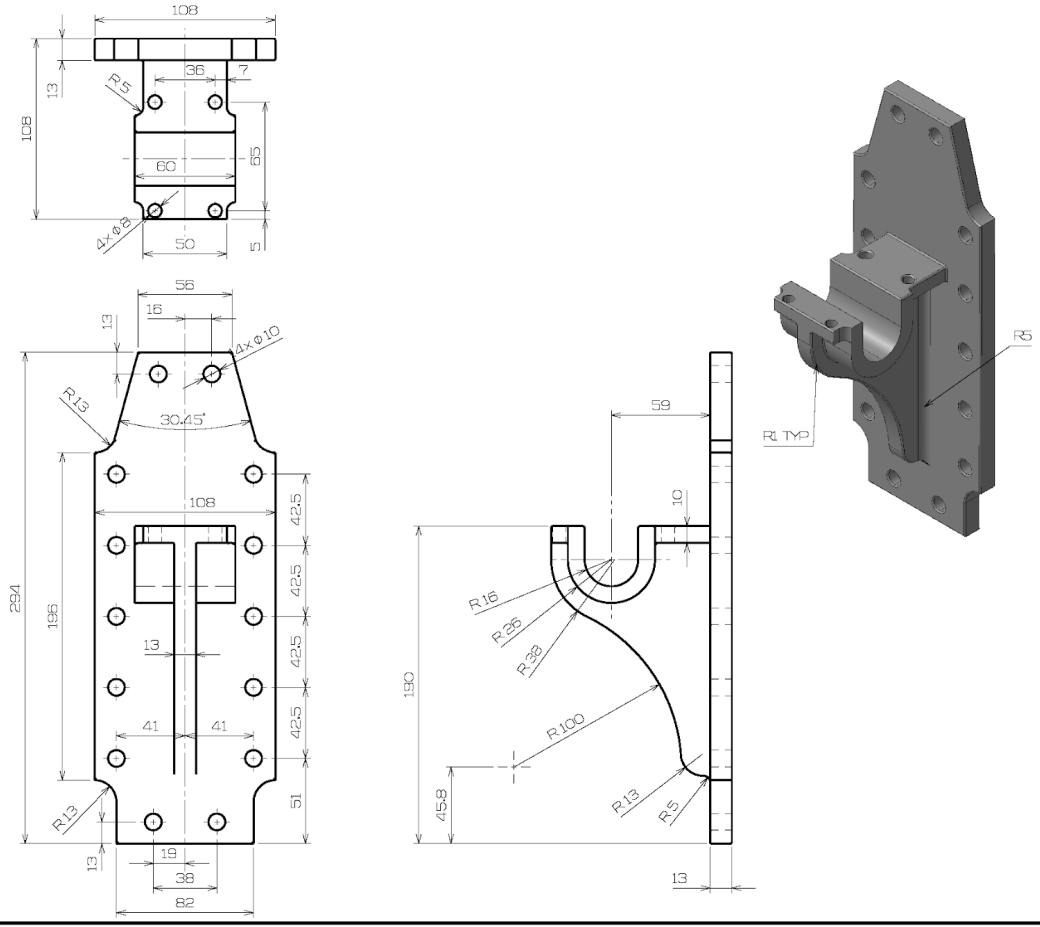

COPYRIGHT 2020 WWW.STUDYCADCAM.COM ALL RIGHTS RESERVED.

3D EXERCISES

776

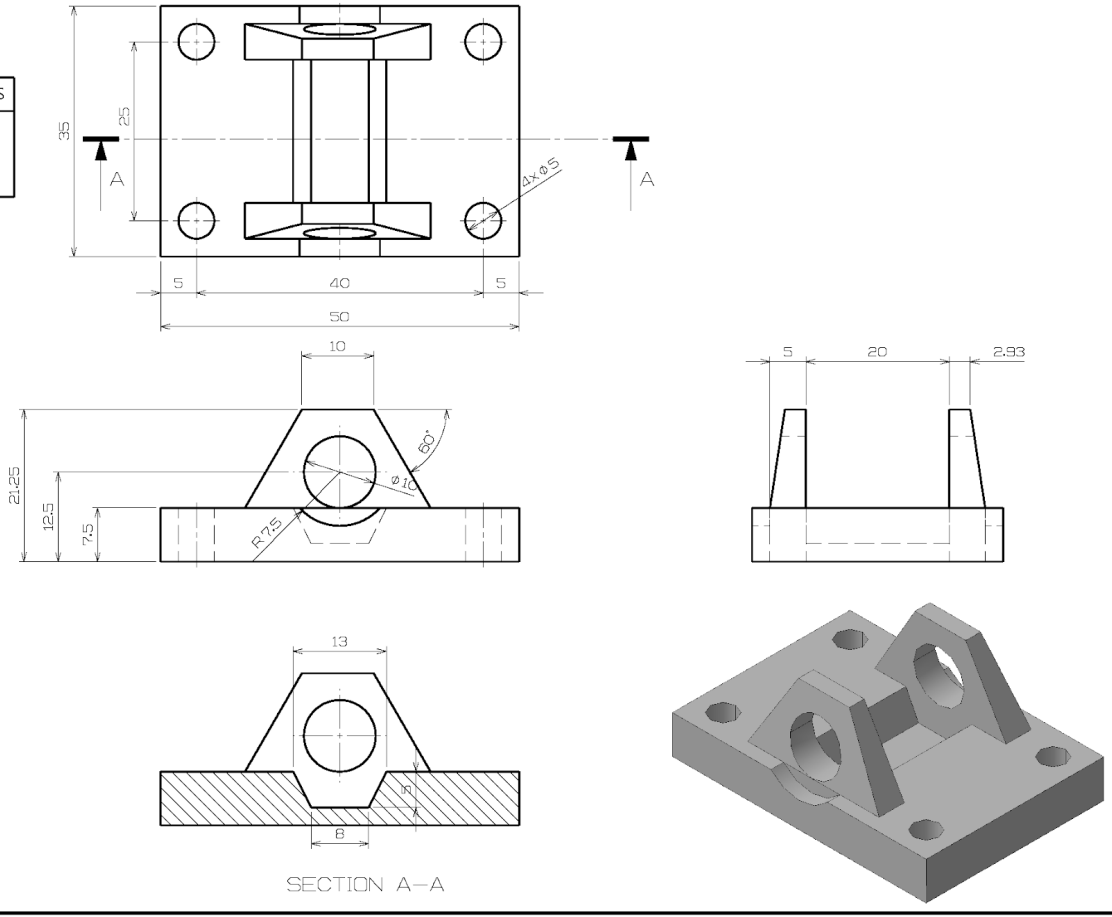

COPYRIGHT 2020 WWW.STUDYCADCAM.COM ALL RIGHTS RESERVED.

3D EXERCISES

786

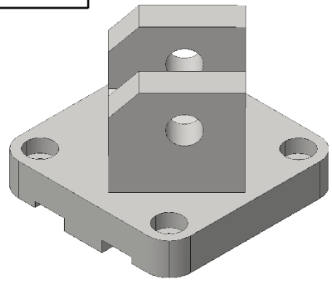

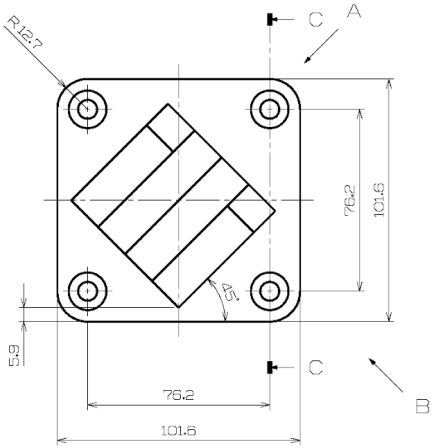

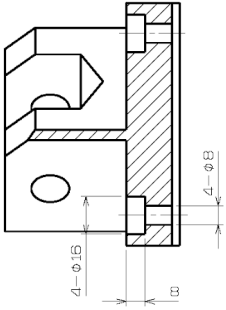

SECTION C–C

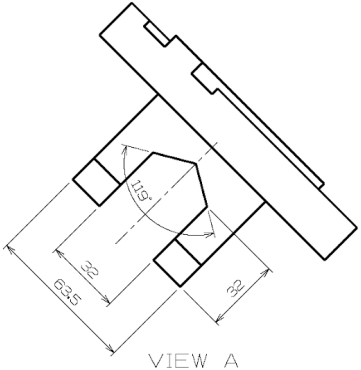

VIEW A

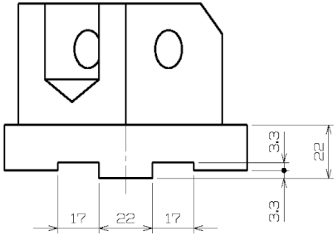

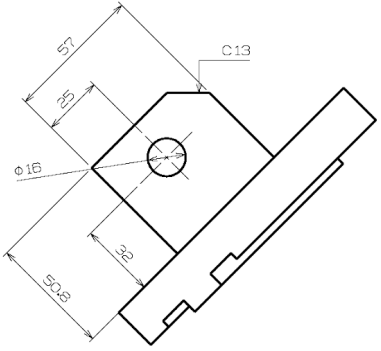

VIEW B

COPYRIGHT 2020 **WWW.STUDYCADCAM.COM** ALL RIGHTS RESERVED.

3D EXERCISES

790

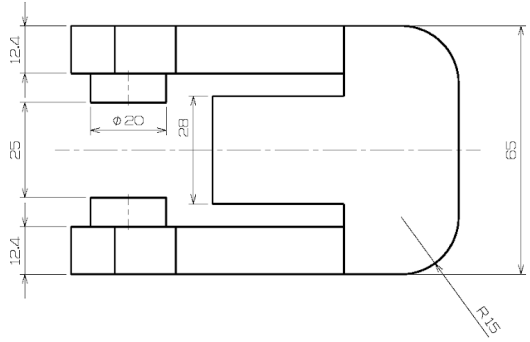

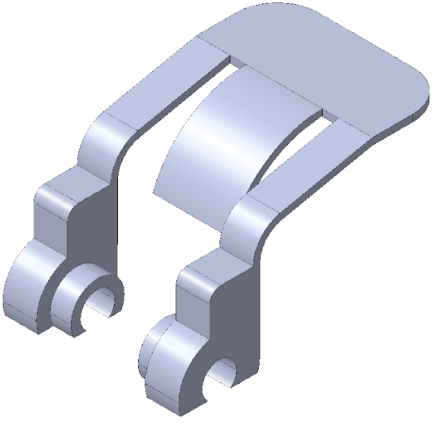

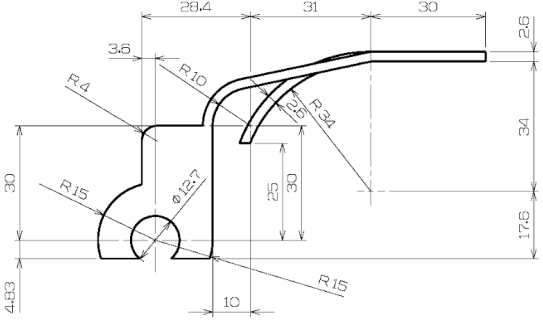

COPYRIGHT 2020 **WWW.STUDYCADCAM.COM** ALL RIGHTS RESERVED.

3D EXERCISES

792

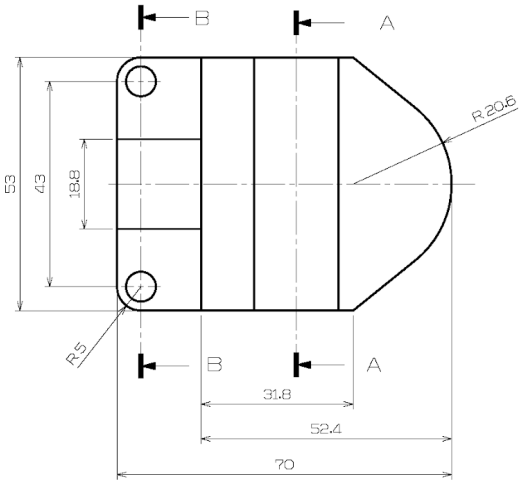

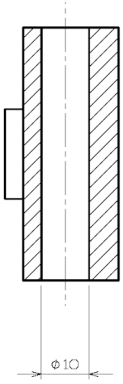

SECTION A–A

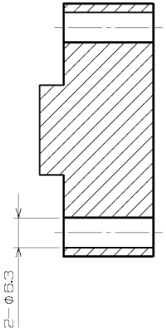

SECTION B–B

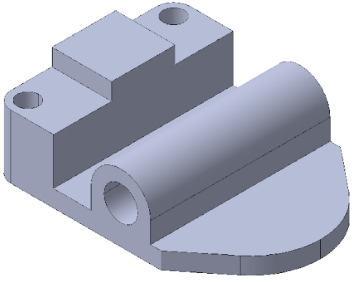

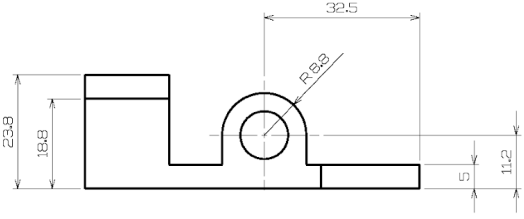

COPYRIGHT 2020 **WWW.STUDYCADCAM.COM** ALL RIGHTS RESERVED.

3D EXERCISES

794

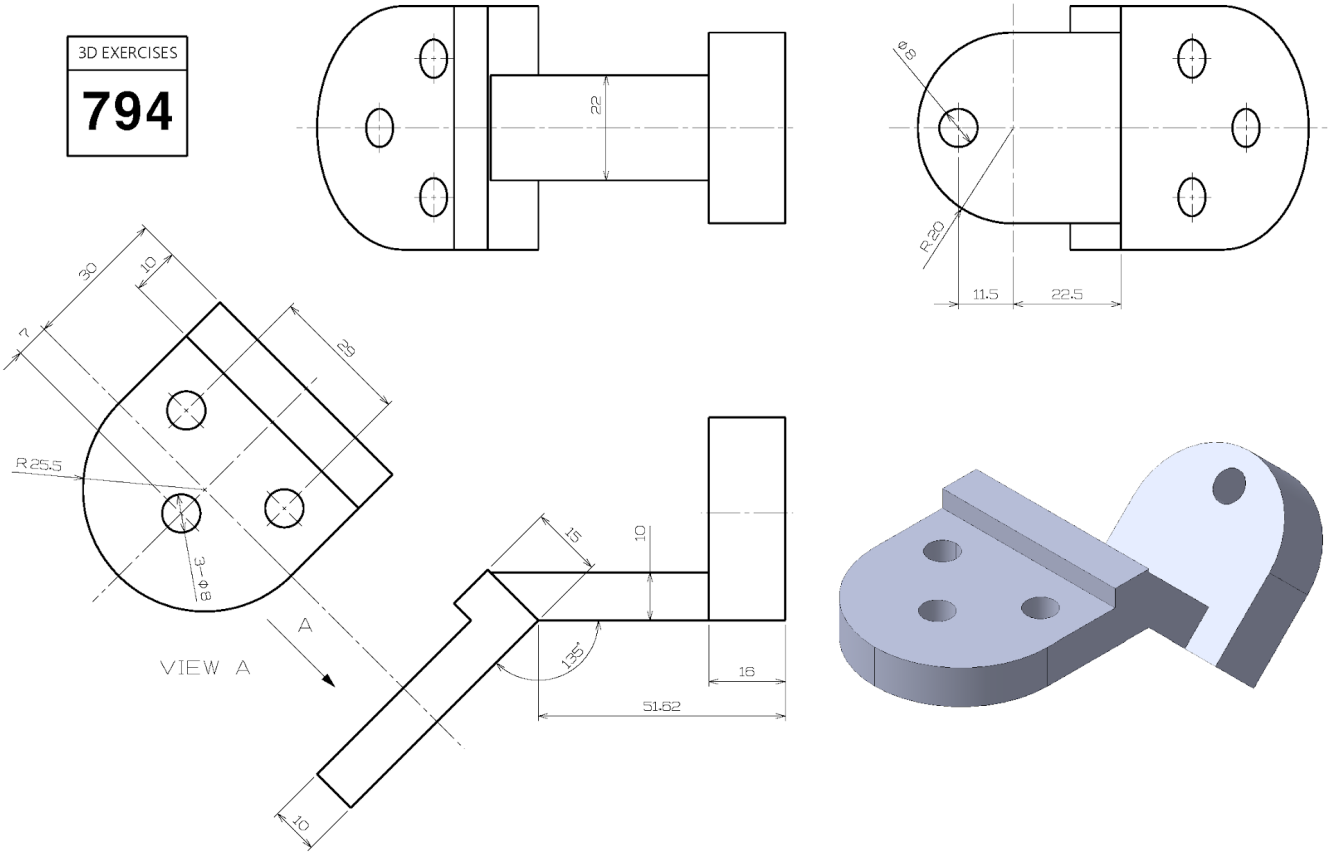

COPYRIGHT 2020 WWW.STUDYCADCAM.COM ALL RIGHTS RESERVED.

3D EXERCISES

796

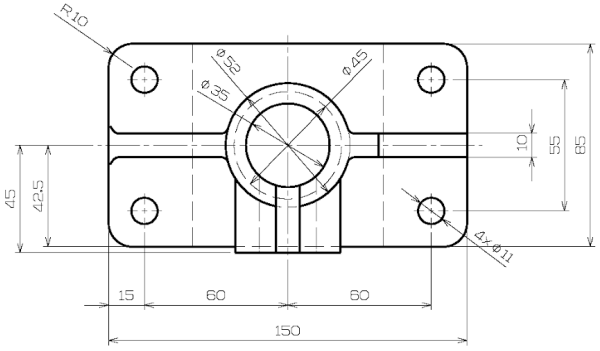

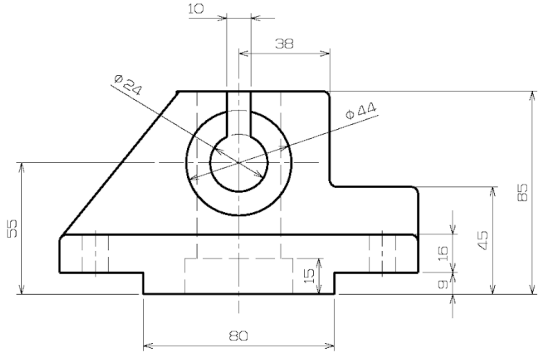

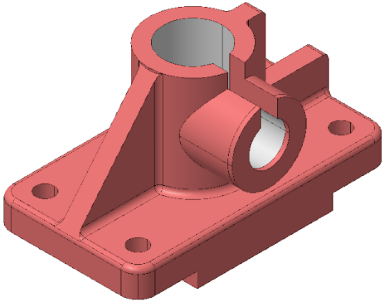

주 사

1. 도시되고 지시않는 라운드는 R3

COPYRIGHT 2020 WWW.STUDYCADCAM.COM ALL RIGHTS RESERVED.

3D EXERCISES

801

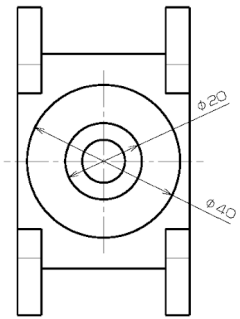

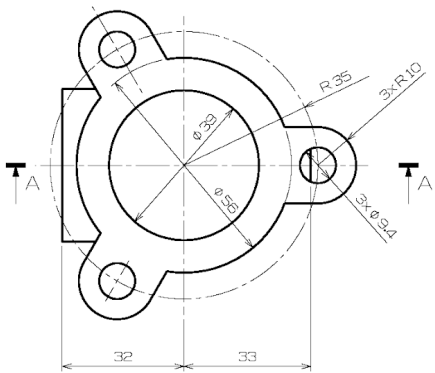

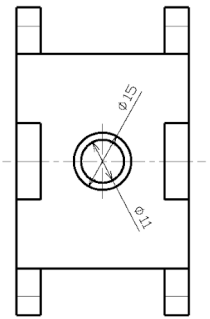

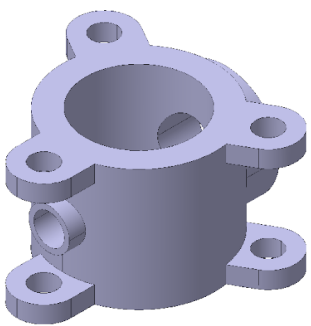

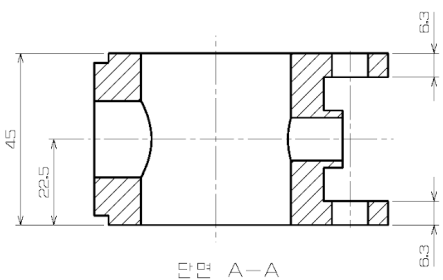

COPYRIGHT 2020 WWW.STUDYCADCAM.COM ALL RIGHTS RESERVED.

3D EXERCISES

809

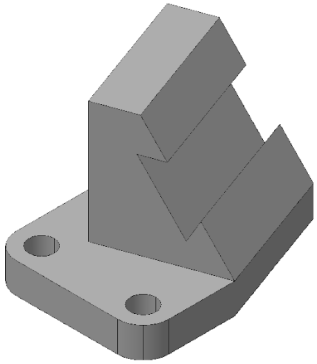

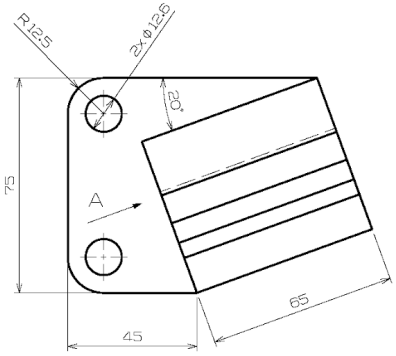

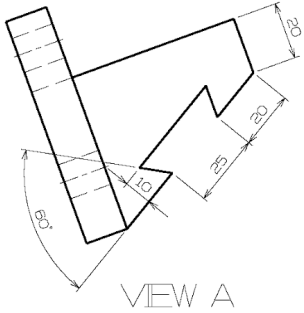

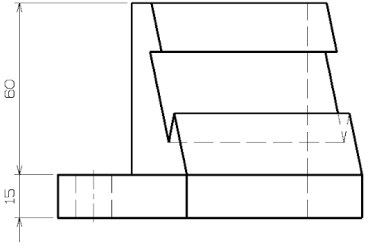

COPYRIGHT 2020 WWW.STUDYCADCAM.COM ALL RIGHTS RESERVED.

3D EXERCISES

812

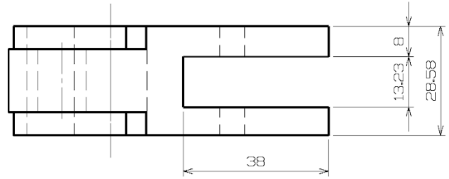

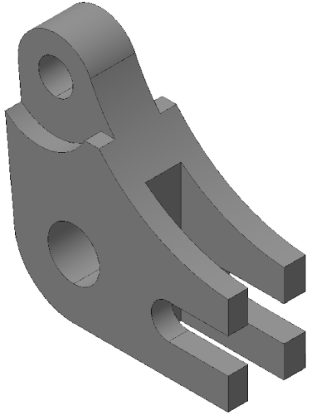

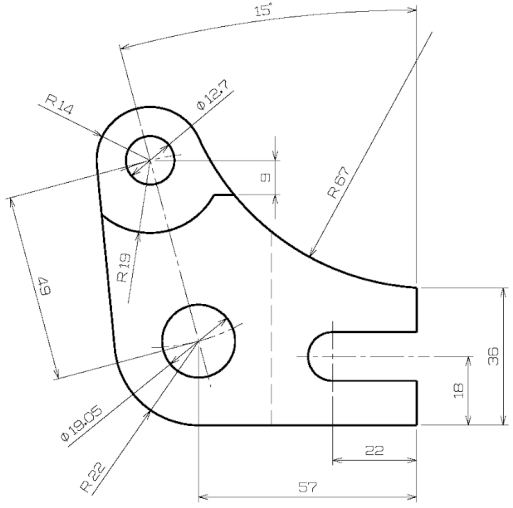

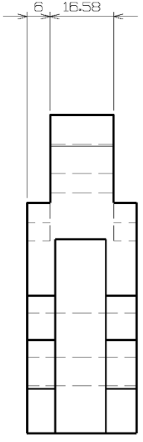

COPYRIGHT 2020 WWW.STUDYCADCAM.COM ALL RIGHTS RESERVED.

3D EXERCISES

843

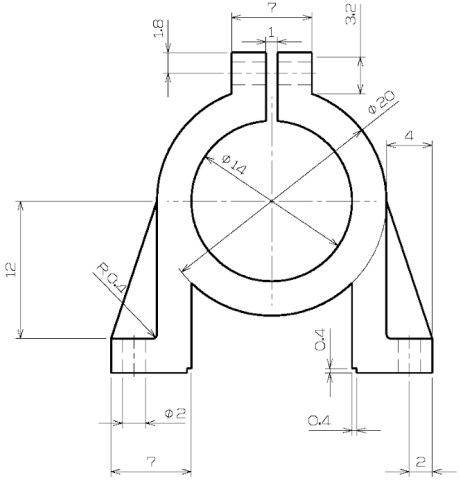

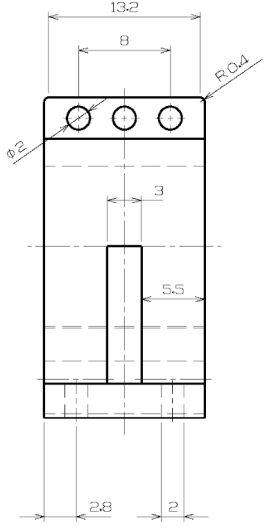

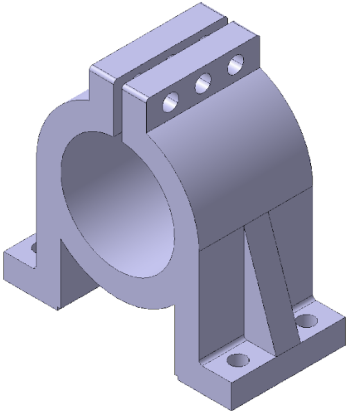

COPYRIGHT 2020 WWW.STUDYCADCAM.COM ALL RIGHTS RESERVED.

3D EXERCISES

855

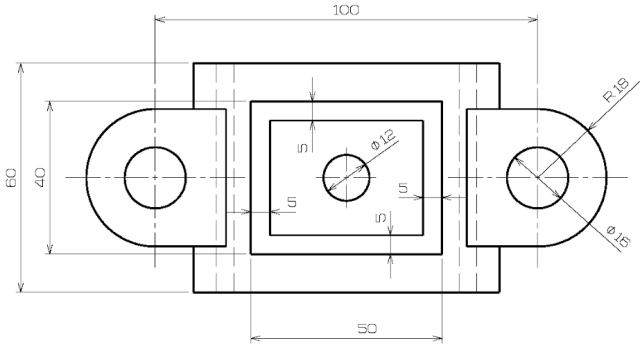

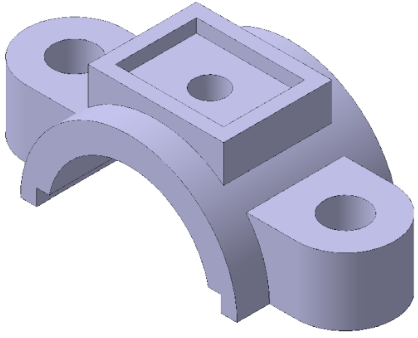

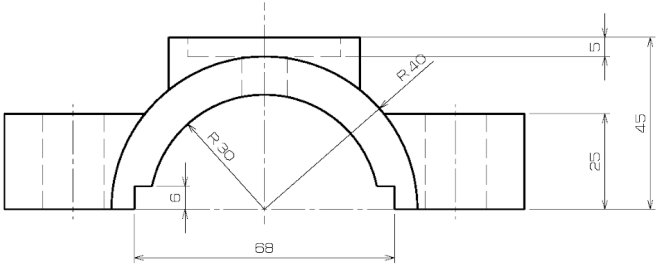

COPYRIGHT 2020 WWW.STUDYCADCAM.COM ALL RIGHTS RESERVED.

3D EXERCISES

857

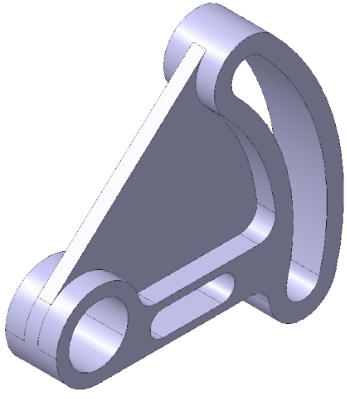

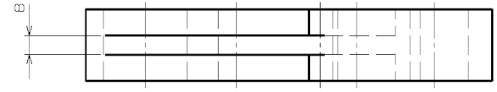

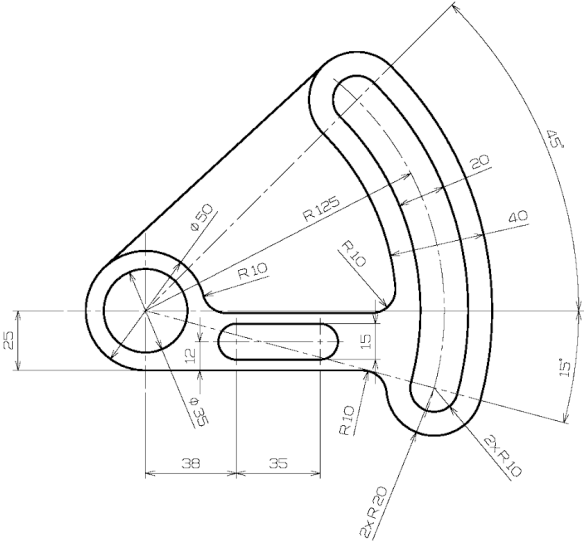

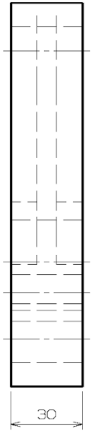

COPYRIGHT 2020 WWW.STUDYCADCAM.COM ALL RIGHTS RESERVED.

3D EXERCISES

861

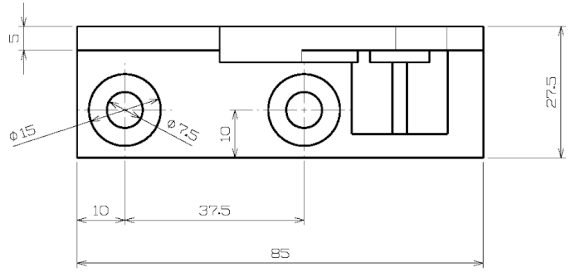

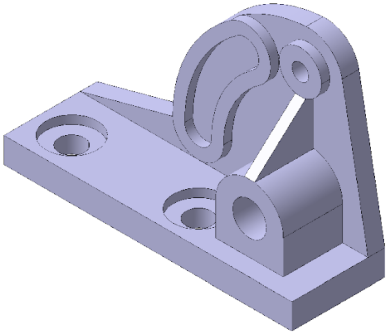

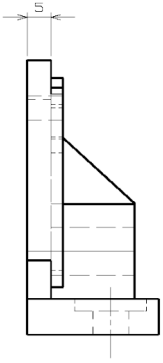

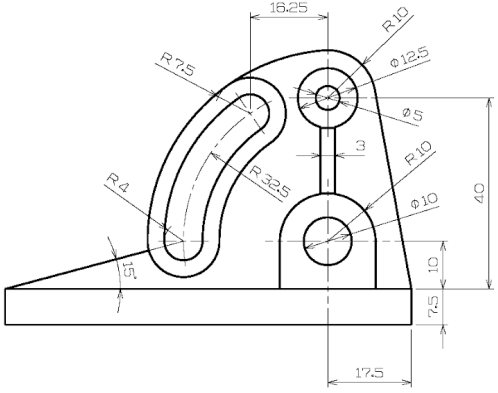

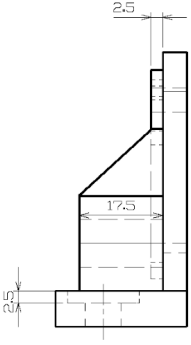

COPYRIGHT 2020 WWW.STUDYCADCAM.COM ALL RIGHTS RESERVED.

3D EXERCISES

899

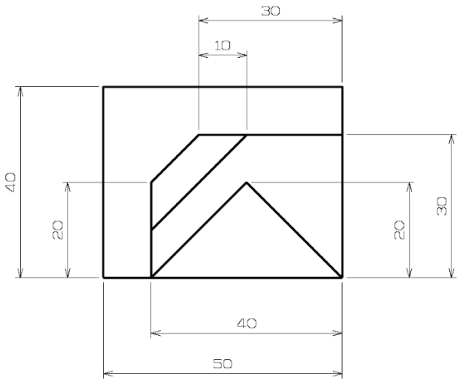

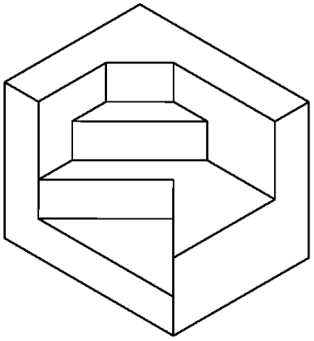

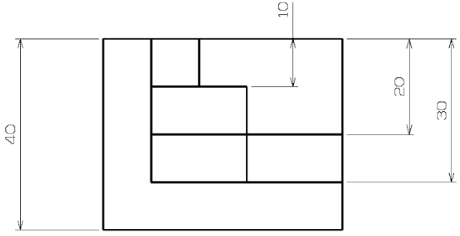

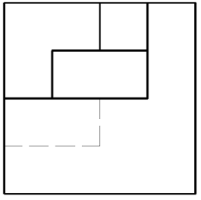

COPYRIGHT 2020 WWW.STUDYCADCAM.COM ALL RIGHTS RESERVED.

3D EXERCISES

926

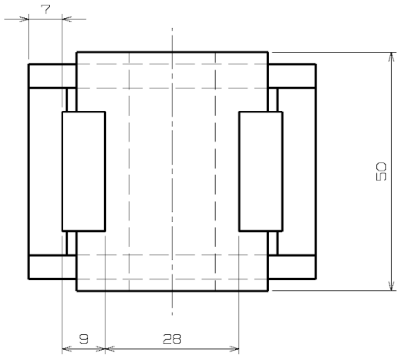

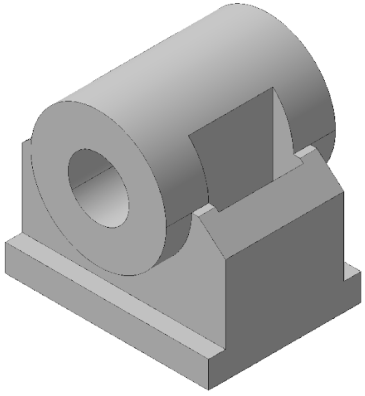

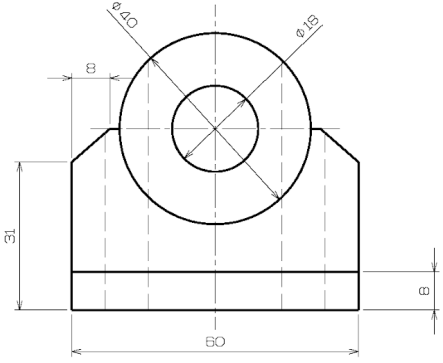

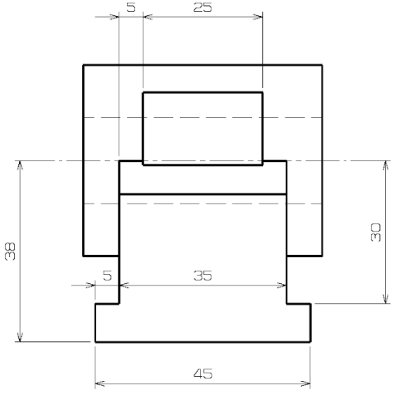

COPYRIGHT 2020 WWW.STUDYCADCAM.COM ALL RIGHTS RESERVED.

3D EXERCISES

934

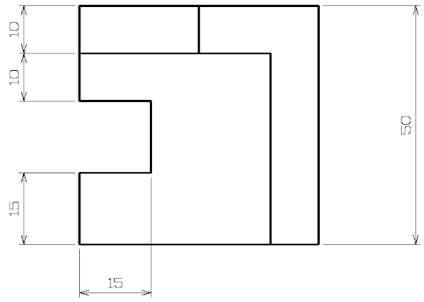

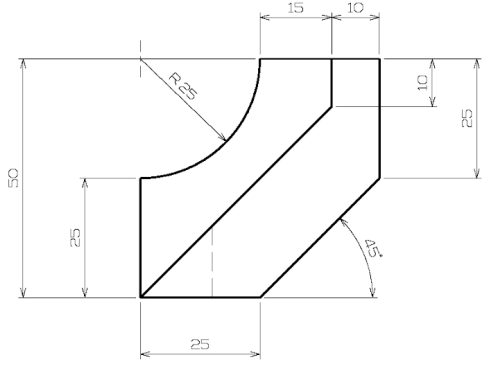

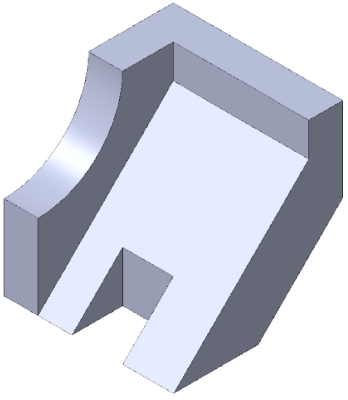

COPYRIGHT 2020 WWW.STUDYCADCAM.COM ALL RIGHTS RESERVED.

3D EXERCISES

938

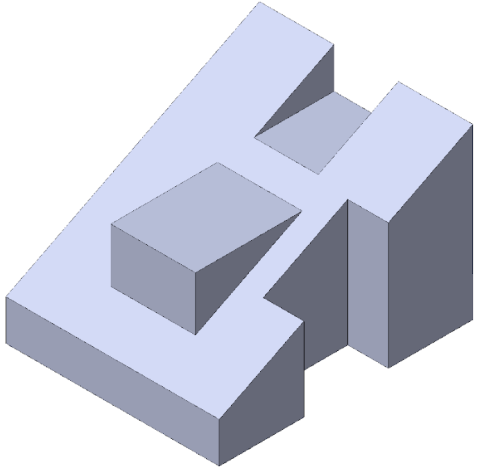

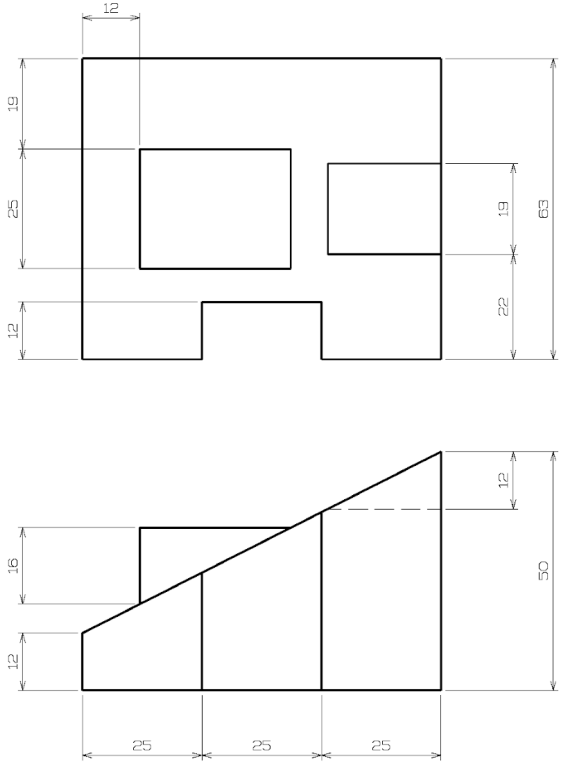

COPYRIGHT 2020 WWW.STUDYCADCAM.COM ALL RIGHTS RESERVED.

3D EXERCISES

945

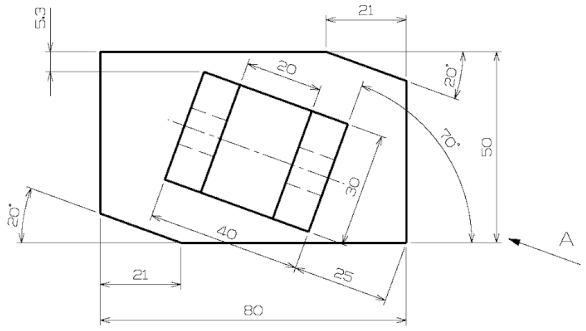

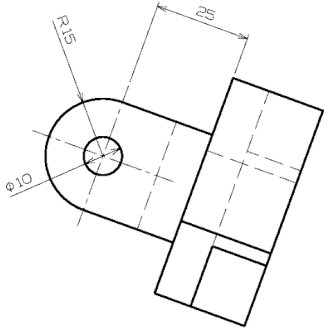

보조 뷰 A

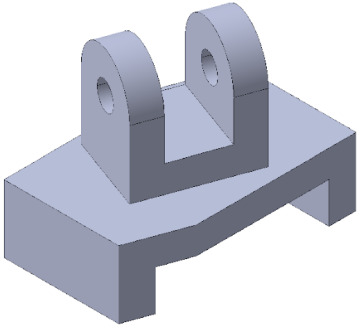

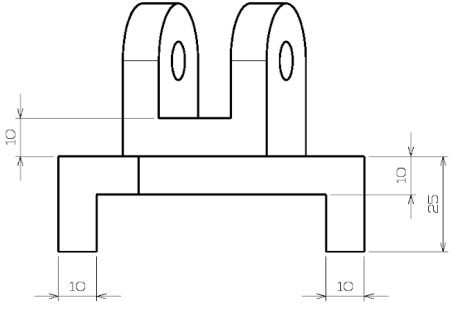

COPYRIGHT 2020 WWW.STUDYCADCAM.COM ALL RIGHTS RESERVED.

3D EXERCISES

949

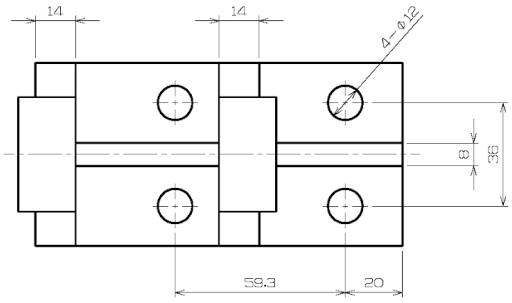

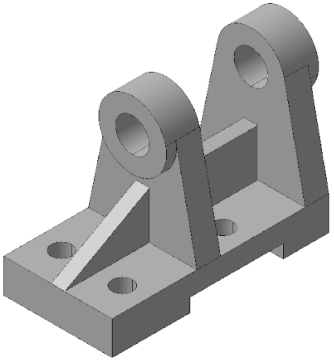

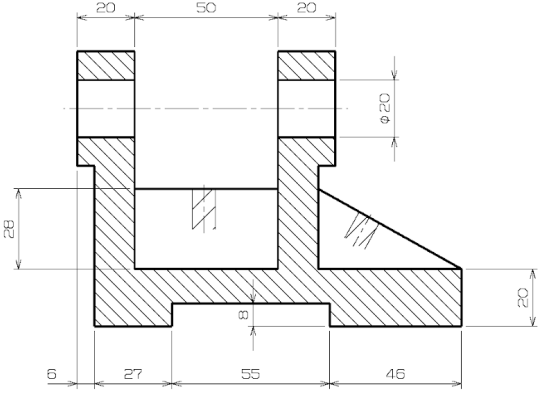

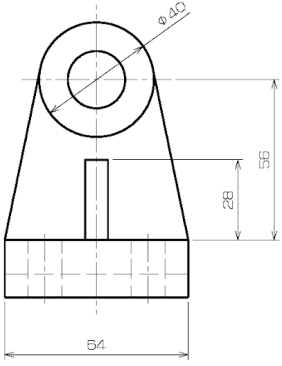

COPYRIGHT 2020 WWW.STUDYCADCAM.COM ALL RIGHTS RESERVED.

3D EXERCISES

950

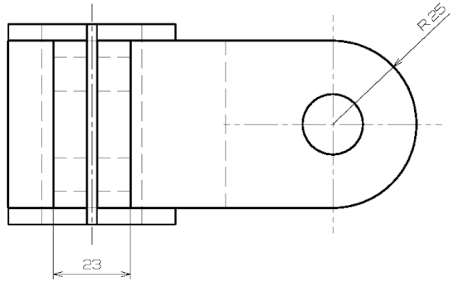

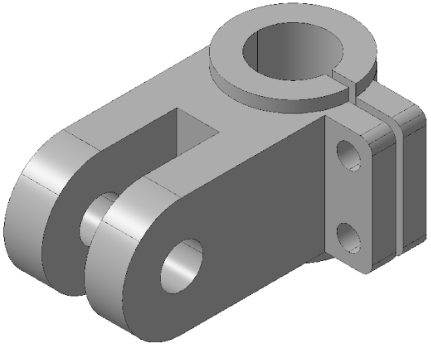

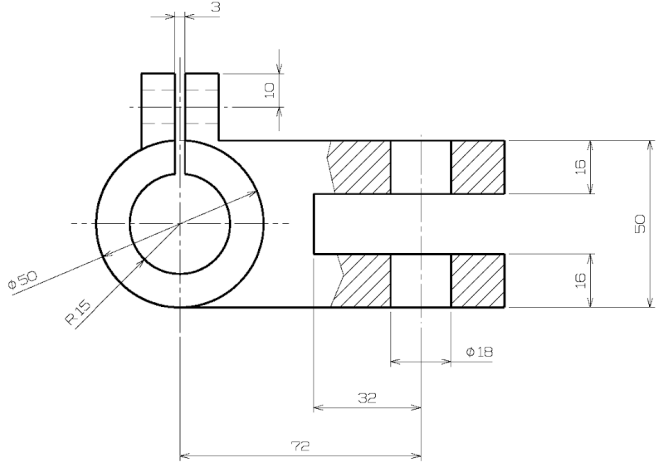

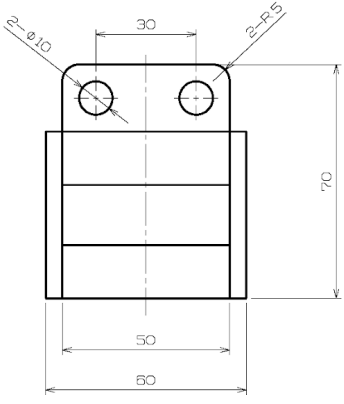

COPYRIGHT 2020 WWW.STUDYCADCAM.COM ALL RIGHTS RESERVED.

3D EXERCISES

958

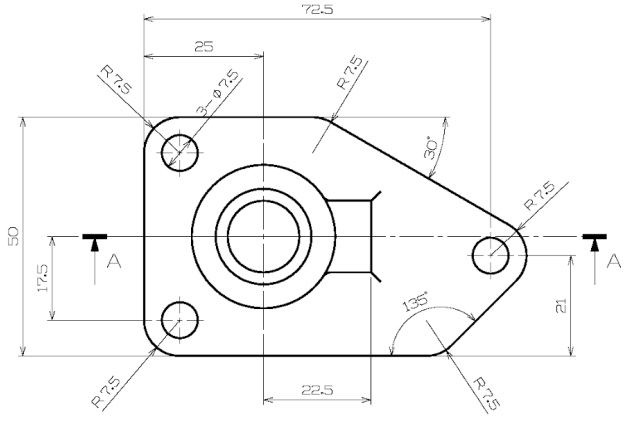

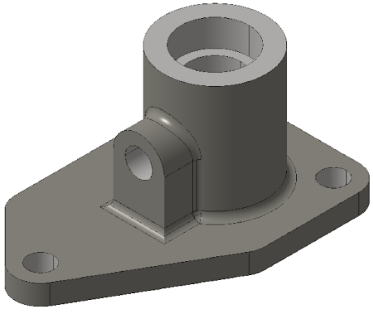

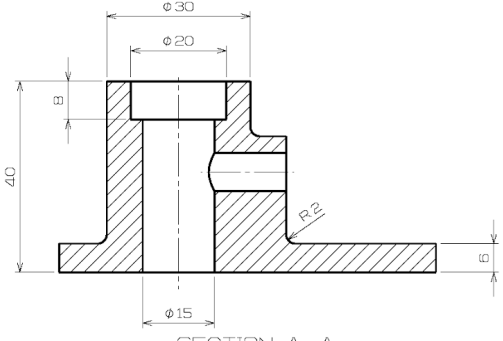

SECTION A–A

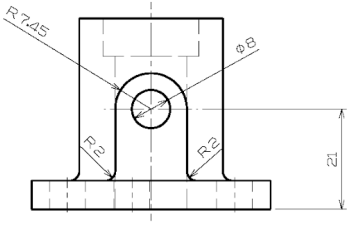

COPYRIGHT 2020 WWW.STUDYCADCAM.COM ALL RIGHTS RESERVED.

3D EXERCISES

963

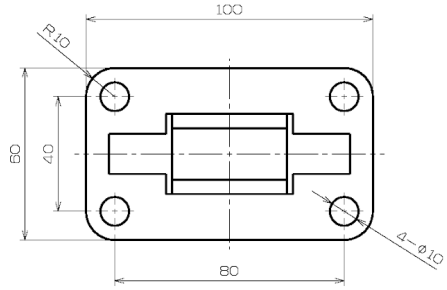

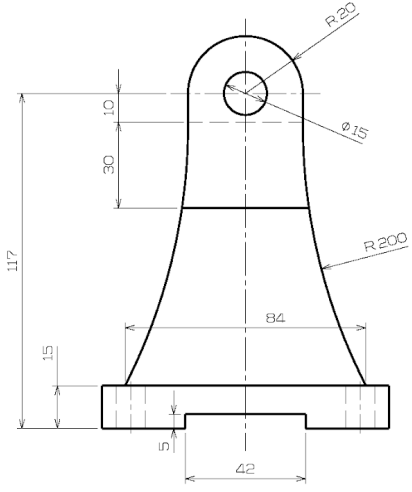

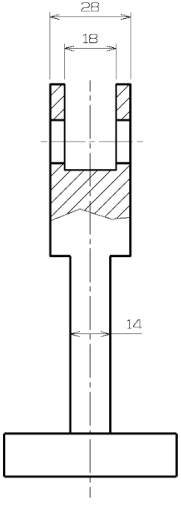

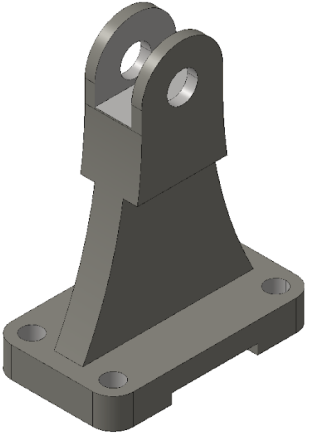

COPYRIGHT 2020 WWW.STUDYCADCAM.COM ALL RIGHTS RESERVED.

3D EXERCISES

971

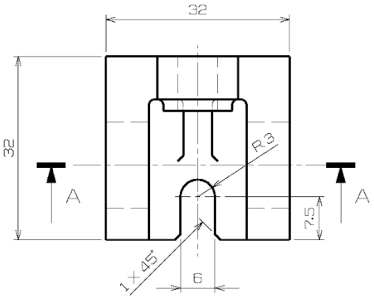

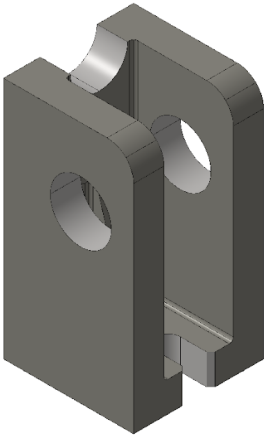

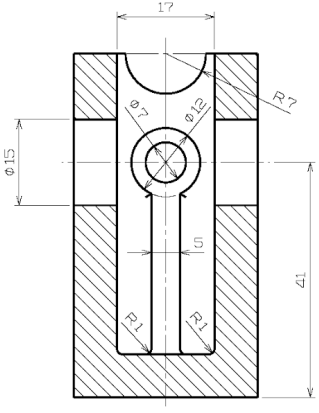

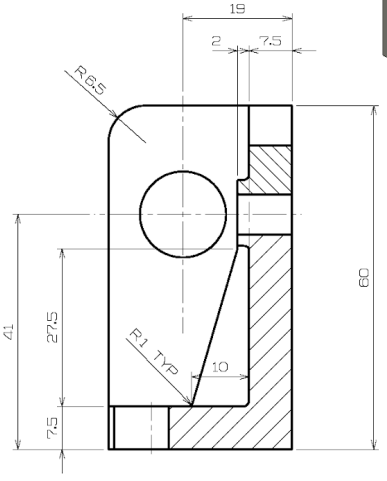

SECTION A–A

COPYRIGHT 2020 WWW.STUDYCADCAM.COM ALL RIGHTS RESERVED.

3D EXERCISES

972

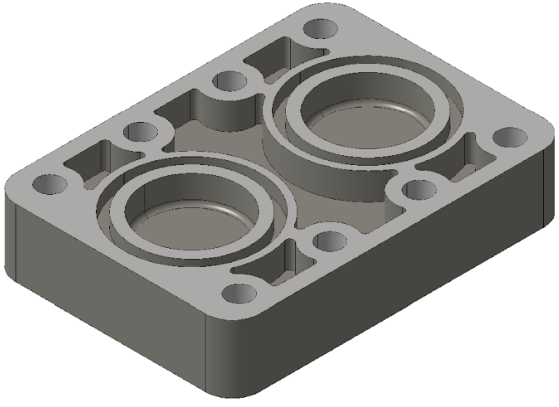

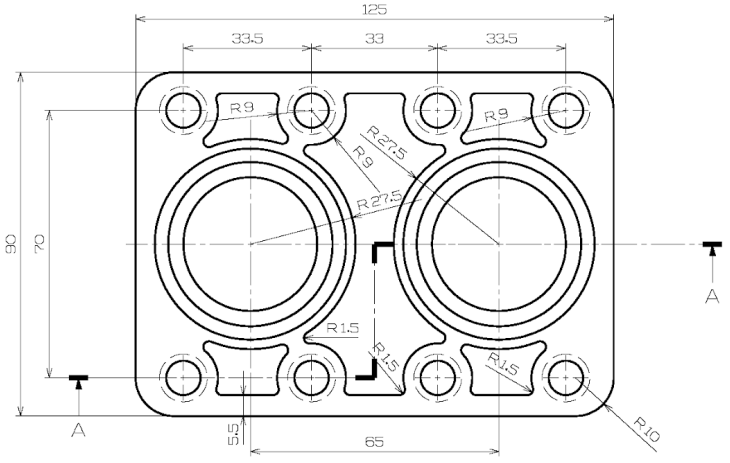

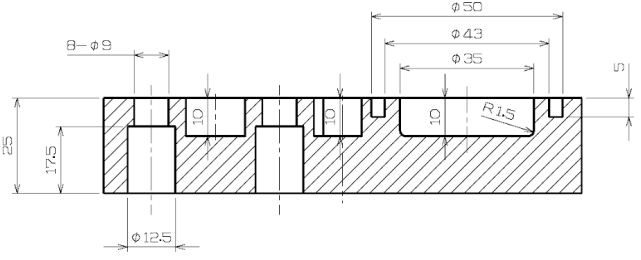

SECTION A−A

COPYRIGHT 2020 WWW.STUDYCADCAM.COM ALL RIGHTS RESERVED.

3D EXERCISES

980

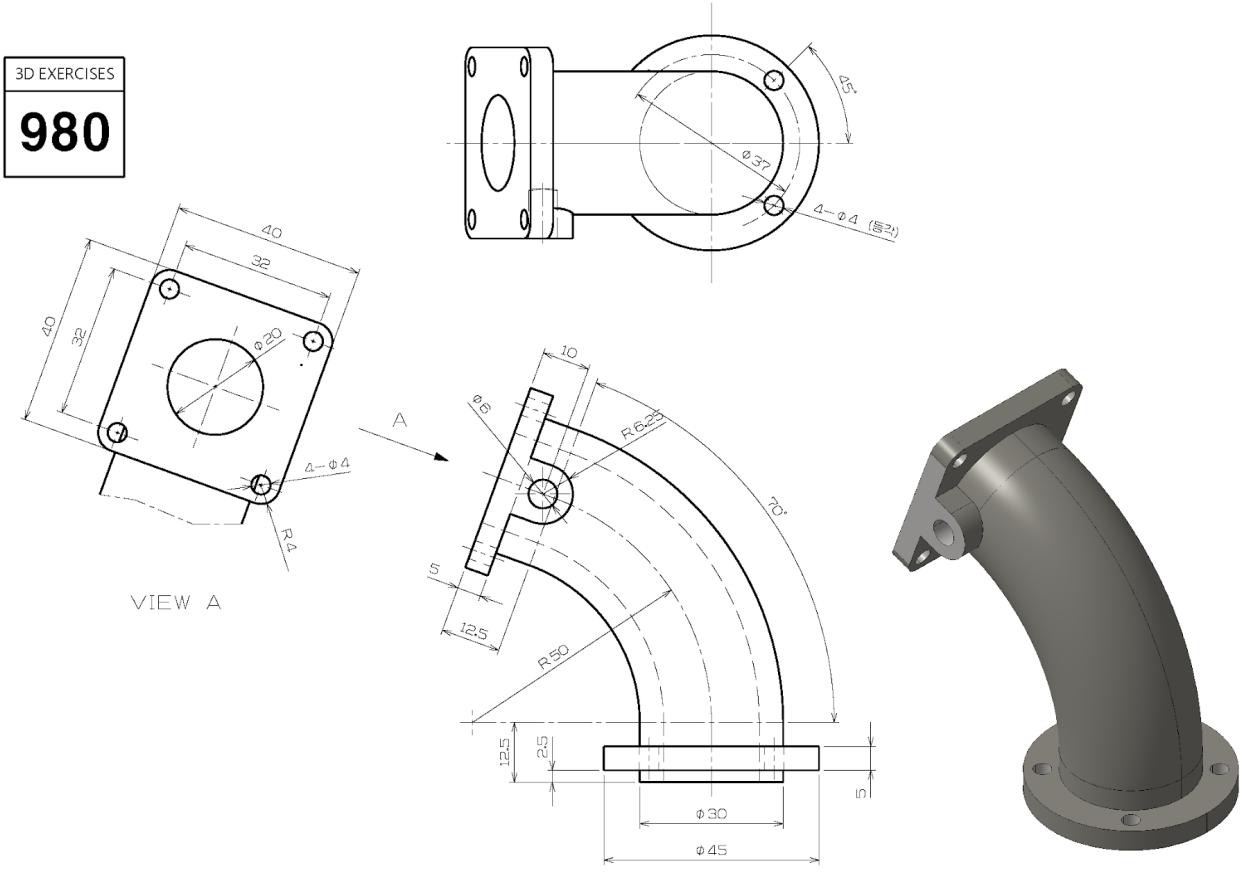

COPYRIGHT 2020 WWW.STUDYCADCAM.COM ALL RIGHTS RESERVED.

3D EXERCISES

982

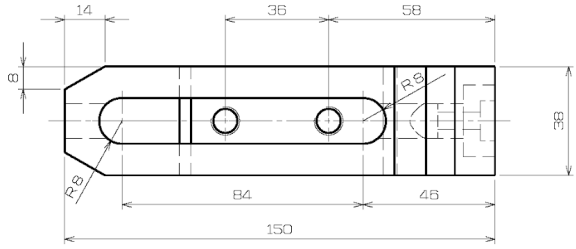

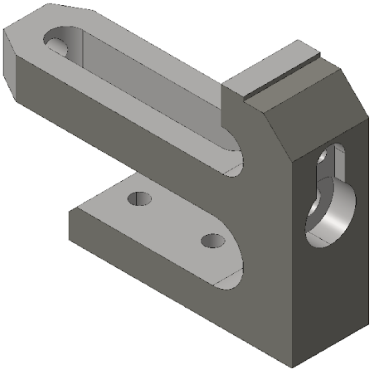

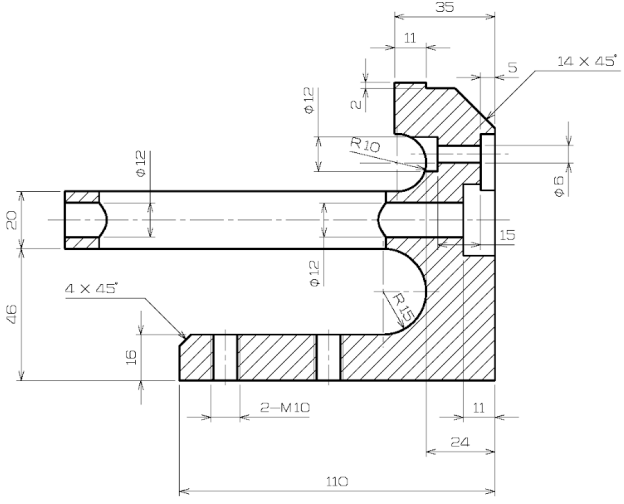

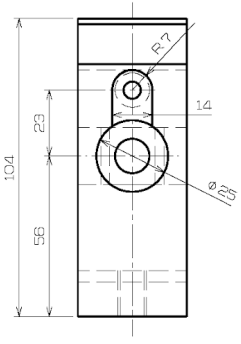

COPYRIGHT 2020 WWW.STUDYCADCAM.COM ALL RIGHTS RESERVED.

3D EXERCISES

984

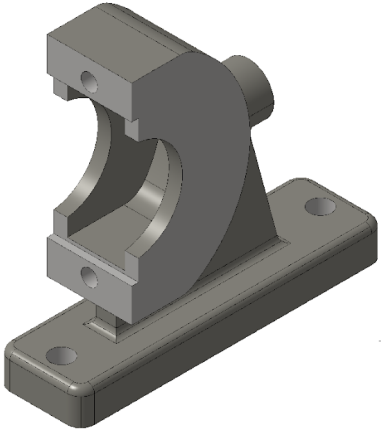

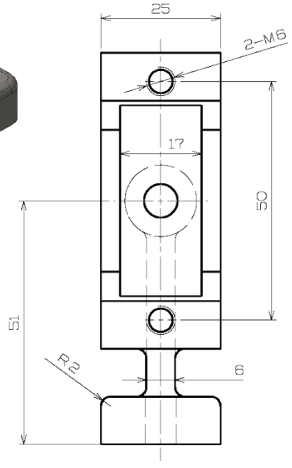

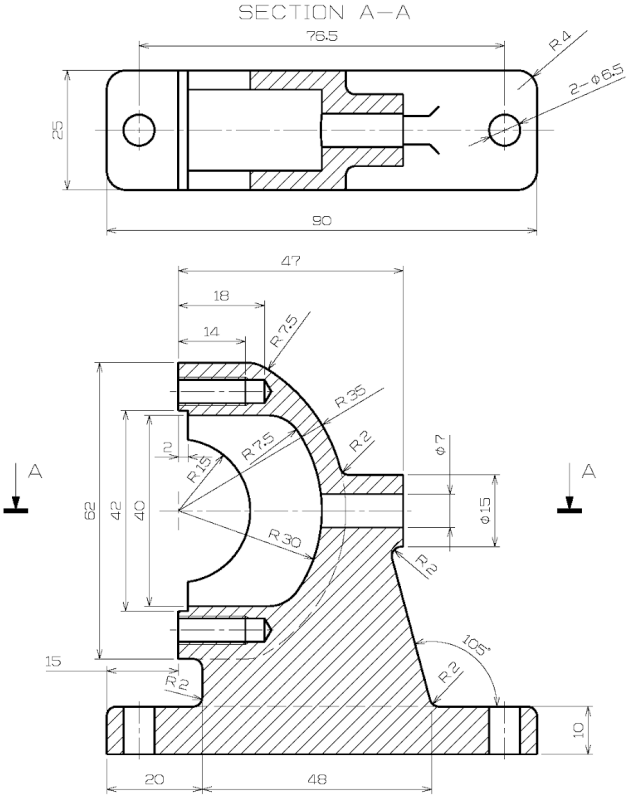

COPYRIGHT 2020 WWW.STUDYCADCAM.COM ALL RIGHTS RESERVED.