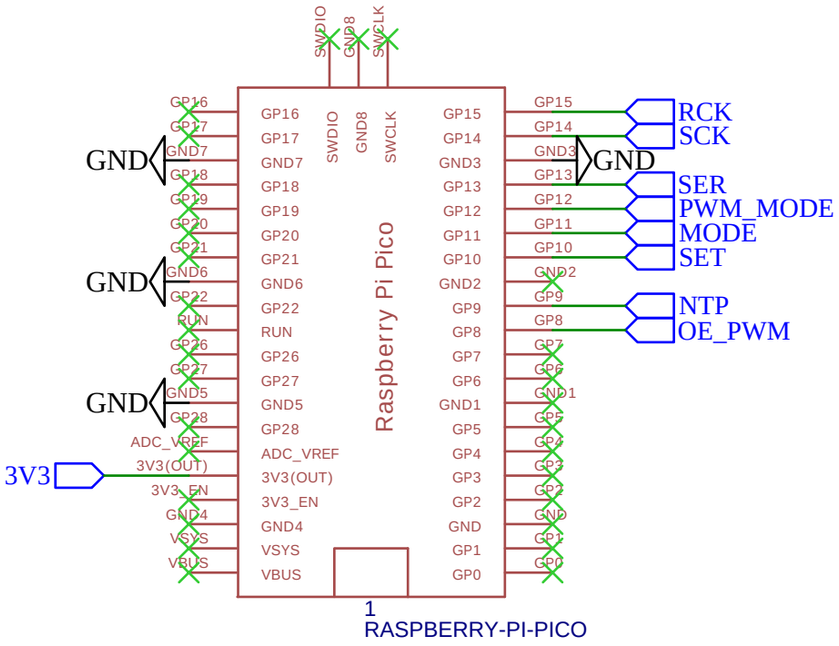

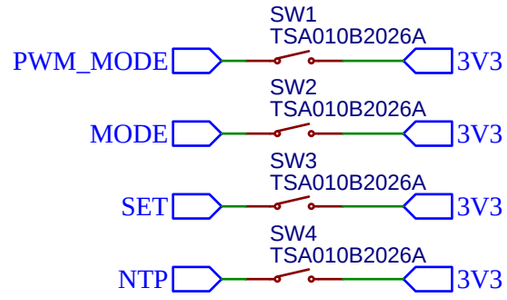

Shift Registers

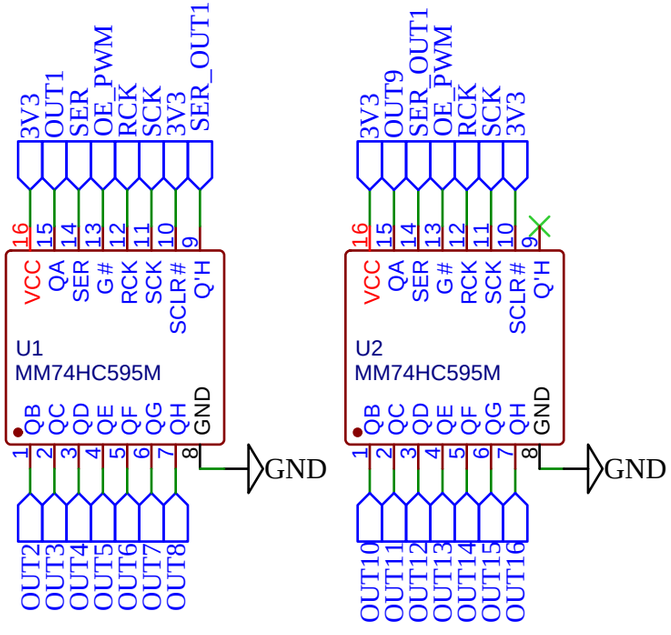

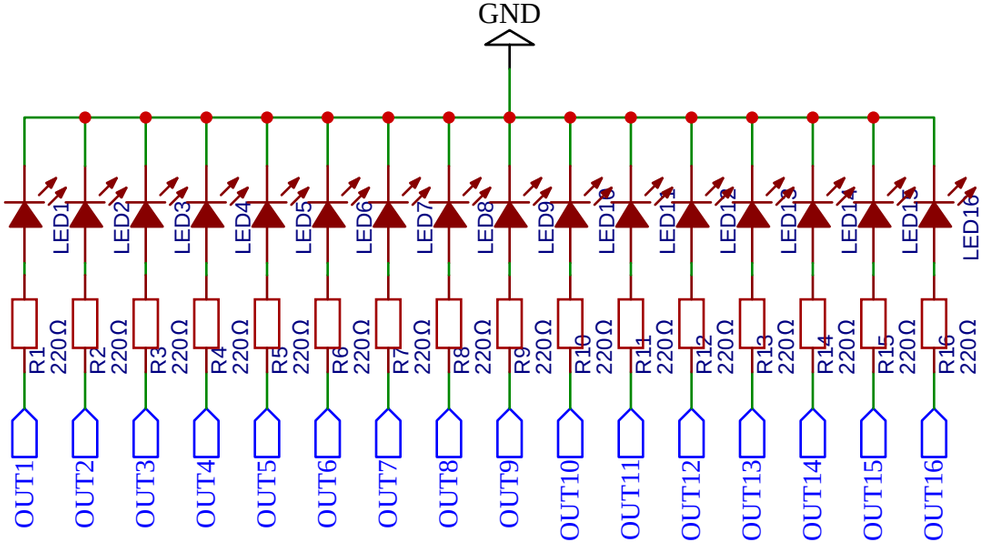

TITLE: BinaryClock	REV: 1.0
Company: Kanaplandia HW Devision	Sheet: 1/1
Date: 2022-10-15 Drawn By: kaxu	