OpenBMSProject
Kayoum Djedidi

Input +
Out +
+5V
Input -
+5V
Mode
BALANCE
STOP
DEBALANCE
R
C5
C4
C3
C2
C1
Cell1
Cell2
Cell3
Cell4
Cell5
Shunt1
Shunt2
Shunt3
Shunt4
Shunt5
V01
V02
V2
V03
V3
V04
V4
V05
V5
charging
Indicator

THIS DOCUMENT AND THE DATA DISCLOSED HEREIN OR HEREWITH IS THE PROPERTY OF ALTIUM LIMITED AND MAY BE FREELY DISTRIBUTED IN WHOLE. NO RIGHTS ARE RESERVED OR EXPRESS OR IMPLIED WARANTEE GIVEN.

REV STATUS OF SHEETS												
REV												
SHEET												

DWG NO: =DOC_NO_ASSY_DWG REV: .Ite

REVISIONS

ZONE	REV	DESCRIPTION	DATE	APPROVED

3D PCB TOP

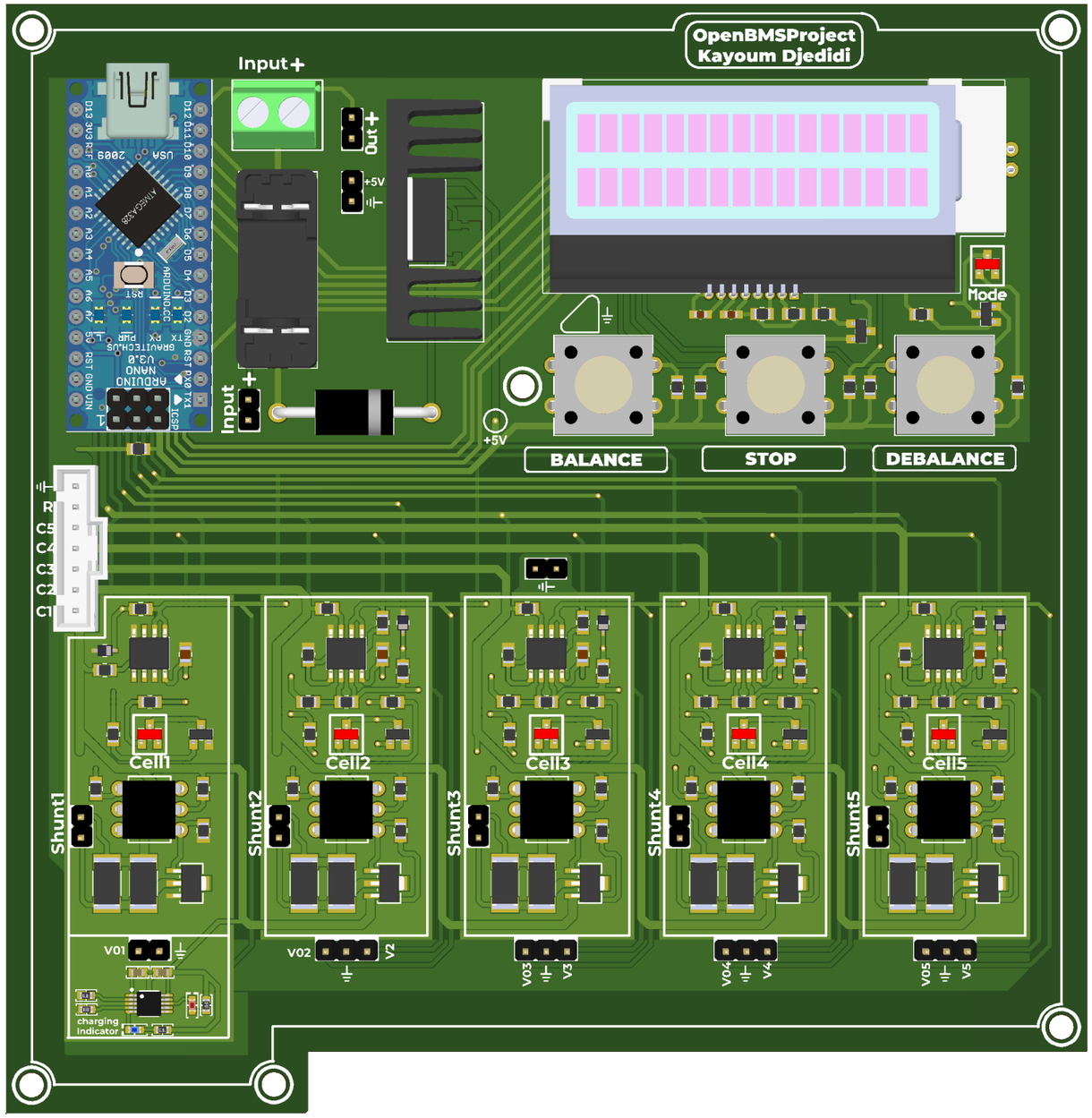

.It

DWG NO: =DOC_NO_ASSY_ REV: .Ite

PART NO: =PCB_PART_NUMBER

APPROVALS	DATE
ENGINEER: =PCB_ENGINEER	=PCB_ENGINEE
DESIGNER: =PCB_DESIGNER	=PCB_DESIGNE
CHECKER: =PCB_CHECKER	=PCB_CHECKE

Reference Documents

BOM DOC: =DOC_NO_BOM

ASSY DOC: =DOC_NO_FAB_DWG

SCH DOC: =DOC_NO_SCH_DWG

PCB DOC: =PCB_DWG_NO

THIRD ANGLE PROJECTION

NEXT ASSY | USED ON

APPLICATION

Altium™

=Address1
=Address2
=Address3
=Address4

DESIGN ITEM: .Item | DESIGN ITEM REVISION: .ItemRevision

TITLE: =PCB_TITLE_1 =PCB_TITLE_2

SIZE: A3 | CAGE CODE: =CAGE_CO | DWG NO: | REV:

SCALE: | FILE NAME: OpenBMS.PCBDwf | SHEET: 1 OF 6

THIS DOCUMENT AND THE DATA DISCLOSED HEREIN OR HEREWITH IS THE PROPERTY OF ALTIUM LIMITED AND MAY BE FREELY DISTRIBUTED IN WHOLE. NO RIGHTS ARE RESERVED OR EXPRESS OR IMPLIED WARANTEE GIVEN.

REV STATUS OF SHEETS												
REV												
SHEET												

DWG NO: =DOC_NO_ASSY_DWG
REV: .Ite

REVISIONS

ZONE	REV	DESCRIPTION	DATE	APPROVED

3D PCB BOTTOM

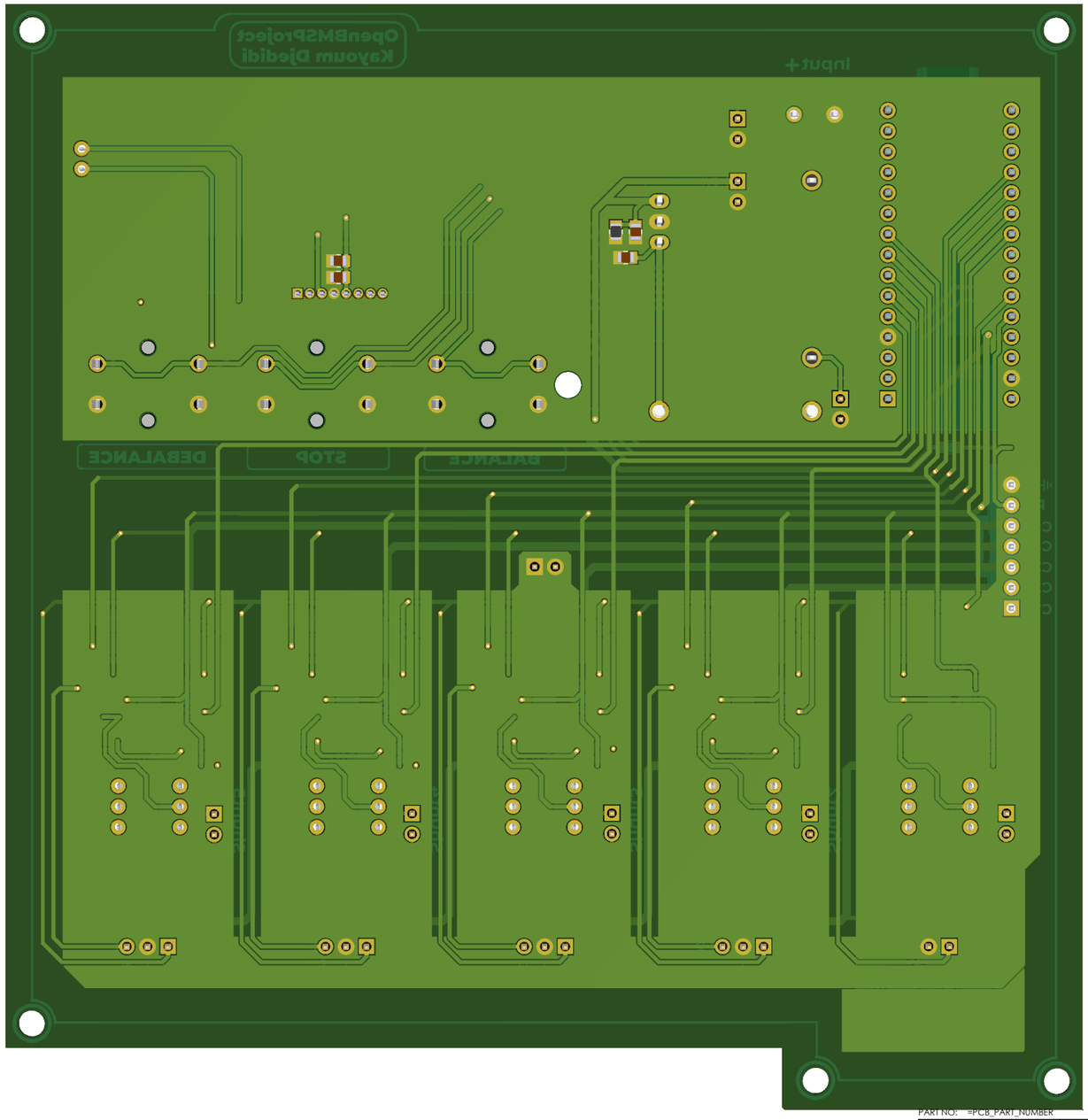

PART NO: =PCB_PART_NUMBER

APPROVALS	DATE
ENGINEER: =PCB_ENGINEER	=PCB_ENGINEE
DESIGNER: =PCB_DESIGNER	=PCB_DESIGNE
CHECKER: =PCB_CHECKER	=PCB_CHECKE

Reference Documents

BOM DOC:	=DOC_NO_BOM
ASSY DOC:	=DOC_NO_FAB_DWG
SCH DOC:	=DOC_NO_SCH_DWG
PCB DOC:	=PCB_DWG_NO

THIRD ANGLE PROJECTION

NEXT ASSY	USED ON
APPLICATION	

Altium™

=Address1
=Address2
=Address3
=Address4

DESIGN ITEM: .Item
DESIGN ITEM REVISION: .ItemRevision

TITLE:
=PCB_TITLE_1
=PCB_TITLE_2

SIZE:	CAGE CODE:	DWG NO:	REV:
A3	=CAGE_CO		

SCALE: | FILE NAME: OpenBMS.PCBDwf | SHEET: 2 OF 6

.It

DWG NO: =DOC_NO_ASSY_
REV: .Ite

THIS DOCUMENT AND THE DATA DISCLOSED HEREIN OR HEREWITH IS THE PROPERTY OF ALTIUM LIMITED AND MAY BE FREELY DISTRIBUTED IN WHOLE. NO RIGHTS ARE RESERVED OR EXPRESS OR IMPLIED WARANTEE GIVEN.

REV STATUS OF SHEETS												
REV												
SHEET												

DWG NO: =DOC_NO_ASSY_DWG REV: .Ite

REVISIONS

ZONE	REV	DESCRIPTION	DATE	APPROVED

TOP LAYER

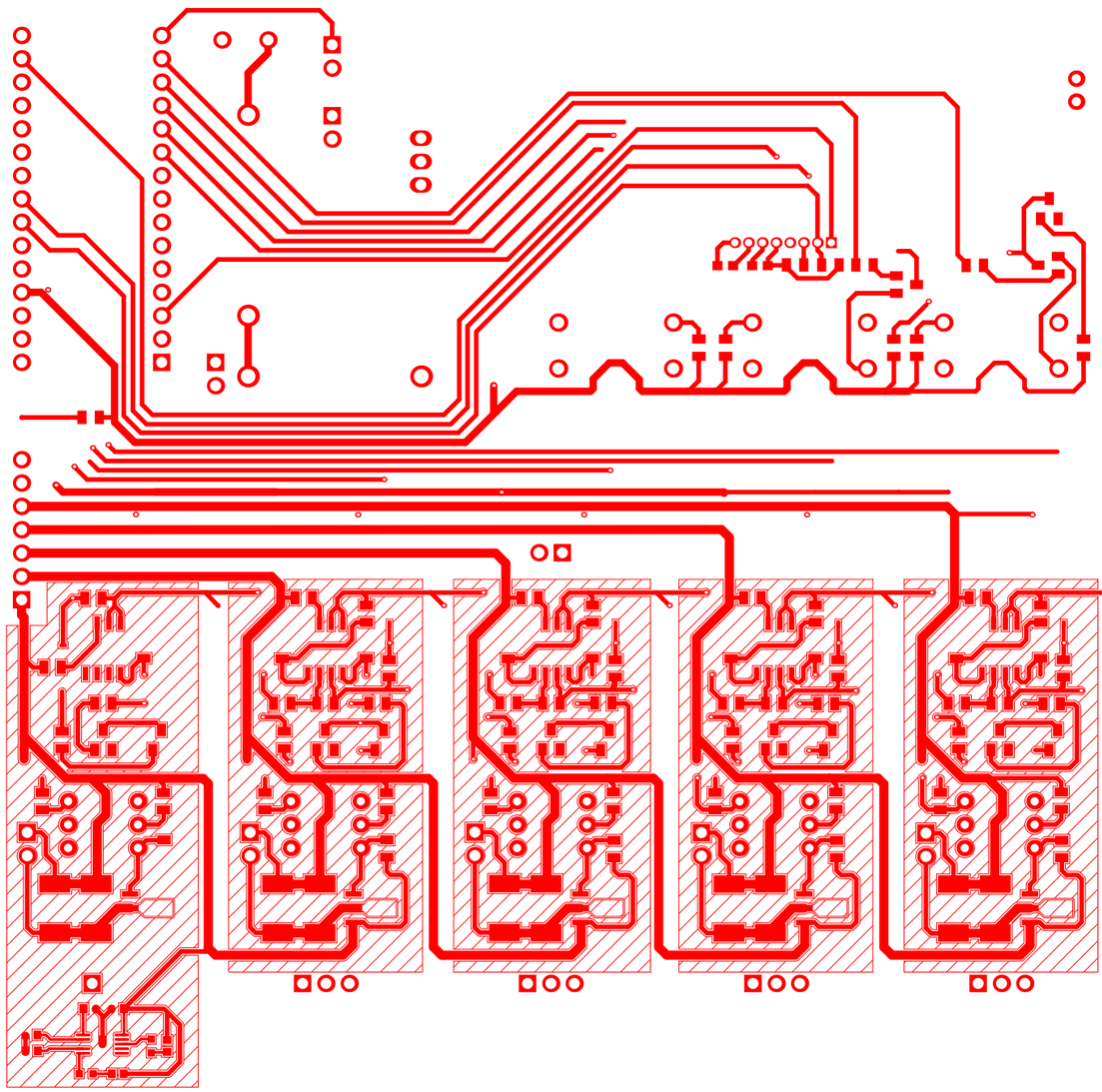

.It

DWG NO: =DOC_NO_ASSY_ REV: .Ite

PART NO: =PCB_PART_NUMBER

APPROVALS		DATE	
ENGINEER:	=PCB_ENGINEER	=PCB_ENGINEE	
DESIGNER:	=PCB_DESIGNER	=PCB_DESIGNE	
CHECKER:	=PCB_CHECKER	=PCB_CHECKE	

Reference Documents

BOM DOC:	=DOC_NO_BOM
ASSY DOC:	=DOC_NO_FAB_DWG
SCH DOC:	=DOC_NO_SCH_DWG
PCB DOC:	=PCB_DWG_NO

THIRD ANGLE PROJECTION

NEXT ASSY | USED ON

APPLICATION

Altium™

=Address1
=Address2
=Address3
=Address4

DESIGN ITEM: .Item

DESIGN ITEM REVISION: .ItemRevision

TITLE: =PCB_TITLE_1 =PCB_TITLE_2

SIZE: A3 | CAGE CODE: =CAGE_CO | DWG NO: | REV:

SCALE: | FILE NAME: OpenBMS.PCBDwf | SHEET: 3 OF 6

THIS DOCUMENT AND THE DATA DISCLOSED HEREIN OR HEREWITH IS THE PROPERTY OF ALTIUM LIMITED AND MAY BE FREELY DISTRIBUTED IN WHOLE. NO RIGHTS ARE RESERVED OR EXPRESS OR IMPLIED WARANTEE GIVEN.

REV STATUS OF SHEETS												
REV												
SHEET												

DWG NO: =DOC_NO_ASSY_DWG REV: .Ite

REVISIONS

ZONE	REV	DESCRIPTION	DATE	APPROVED

BOTTOM LAYER

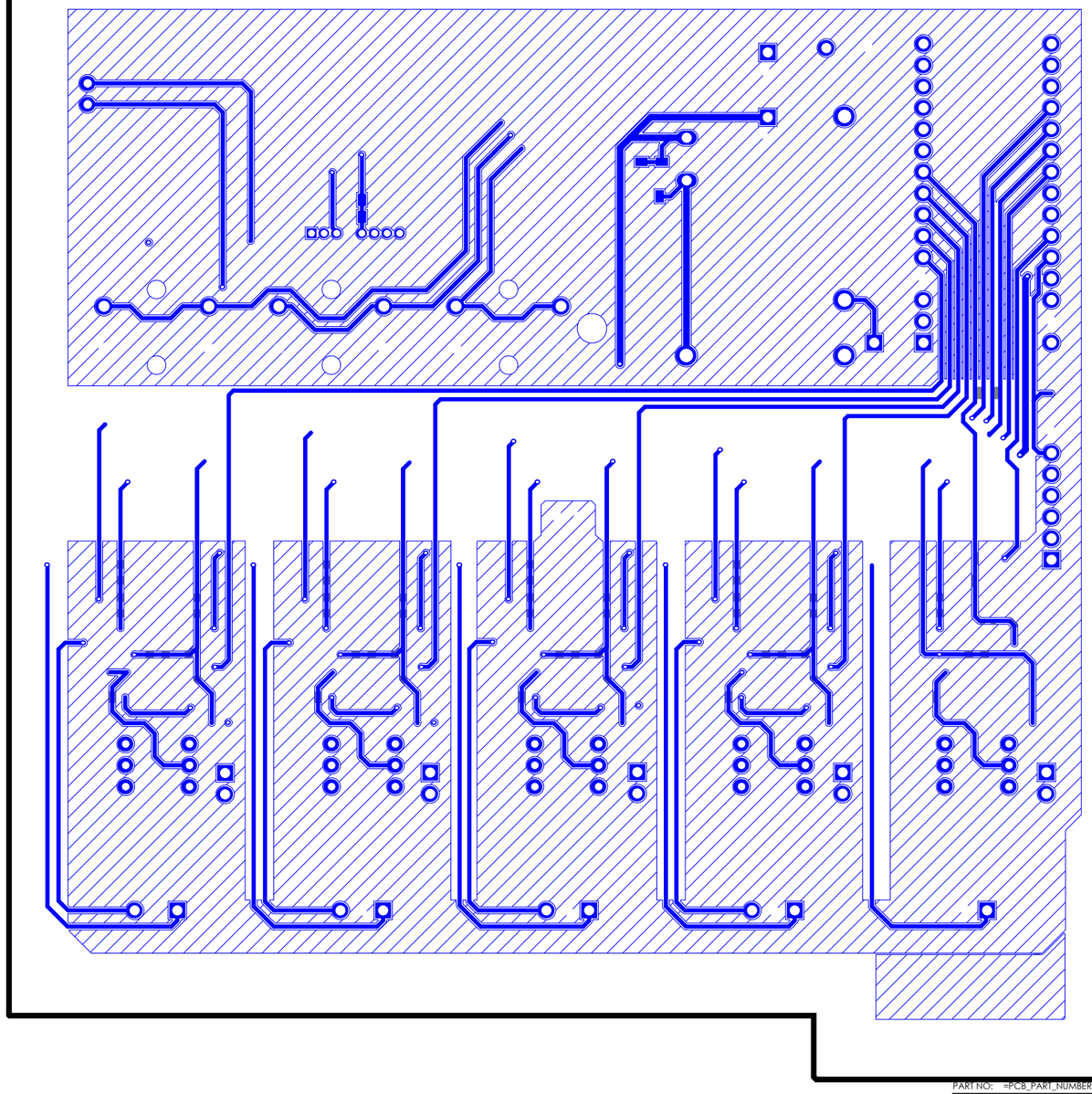

THIRD ANGLE PROJECTION			
NEXT ASSY	USED ON		
APPLICATION			

PART NO: =PCB_PART_NUMBER

APPROVALS	DATE
ENGINEER: =PCB_ENGINEER	=PCB_ENGINEE
DESIGNER: =PCB_DESIGNER	=PCB_DESIGNE
CHECKER: =PCB_CHECKER	=PCB_CHECKE

Reference Documents

BOM DOC:	=DOC_NO_BOM
ASSY DOC:	=DOC_NO_FAB_DWG
SCH DOC:	=DOC_NO_SCH_DWG
PCB DOC:	=PCB_DWG_NO

Altium™

=Address1
=Address2
=Address3
=Address4

DESIGN ITEM: .Item | DESIGN ITEM REVISION: .ItemRevision

TITLE: =PCB_TITLE_1 =PCB_TITLE_2

SIZE:	CAGE CODE:	DWG NO:	REV:
A3	=CAGE_CO		

SCALE: | FILE NAME: OpenBMS.PCBDwf | SHEET: 4 OF 6

.It

DWG NO: =DOC_NO_ASSY_ REV: .Ite

THIS DOCUMENT AND THE DATA DISCLOSED HEREIN OR HEREWITH IS THE PROPERTY OF ALTIUM LIMITED AND MAY BE FREELY DISTRIBUTED IN WHOLE. NO RIGHTS ARE RESERVED OR EXPRESS OR IMPLIED WARANTEE GIVEN.

REV STATUS OF SHEETS												
	REV											
	SHEET											

DWG NO: =DOC_NO_ASSY_DWG REV: .Ite

REVISIONS

ZONE	REV	DESCRIPTION	DATE	APPROVED

TOP ASSEMBLY VIEW

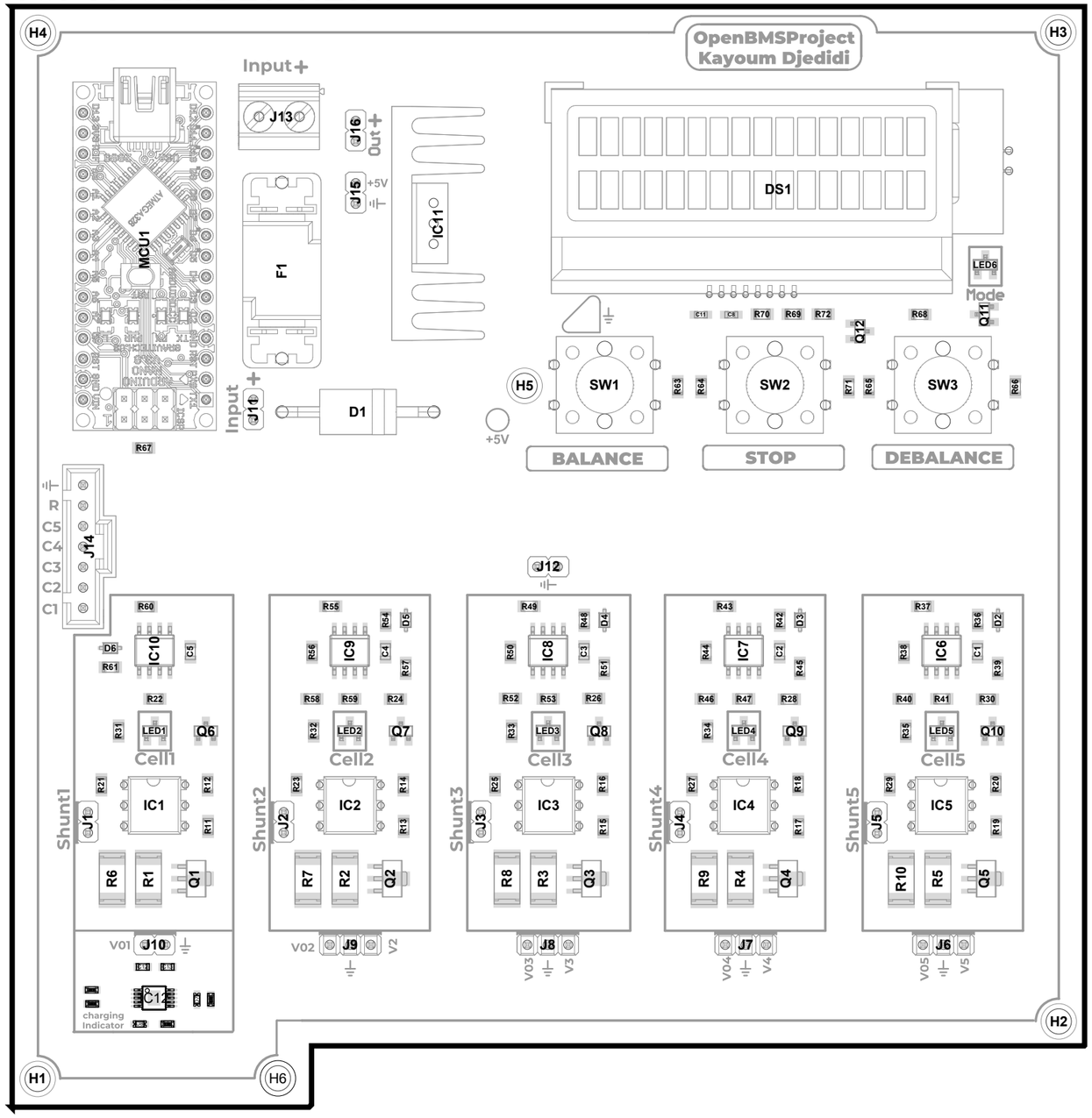

.lt

DWG NO: =DOC_NO_ASSY_ REV: .lte

PART NO: =PCB_PART_NUMBER

APPROVALS	DATE
ENGINEER: =PCB_ENGINEER	=PCB_ENGINEE
DESIGNER: =PCB_DESIGNER	=PCB_DESIGNE
CHECKER: =PCB_CHECKER	=PCB_CHECKE

Reference Documents

BOM DOC:	=DOC_NO_BOM
ASSY DOC:	=DOC_NO_FAB_DWG
SCH DOC:	=DOC_NO_SCH_DWG
PCB DOC:	=PCB_DWG_NO

THIRD ANGLE PROJECTION

NEXT ASSY | USED ON

APPLICATION

Altium™

=Address1
=Address2
=Address3
=Address4

DESIGN ITEM: .Item | DESIGN ITEM REVISION: .ItemRevision

TITLE: =PCB_TITLE_1 =PCB_TITLE_2

SIZE: A3 | CAGE CODE: =CAGE_CO | DWG NO: | REV:

SCALE: | FILE NAME: OpenBMS.PCBDwf | SHEET: 5 OF 6

THIS DOCUMENT AND THE DATA DISCLOSED HEREIN OR HEREWITH IS THE PROPERTY OF ALTIUM LIMITED AND MAY BE FREELY DISTRIBUTED IN WHOLE. NO RIGHTS ARE RESERVED OR EXPRESS OR IMPLIED WARANTEE GIVEN.

DWG NO: =DOC_NO_ASSY_DWG REV: .lte

REV STATUS OF SHEETS | REV | SHEET

REVISIONS

ZONE	REV	DESCRIPTION	DATE	APPROVED

BOTTOM ASSEMBLY VIEW

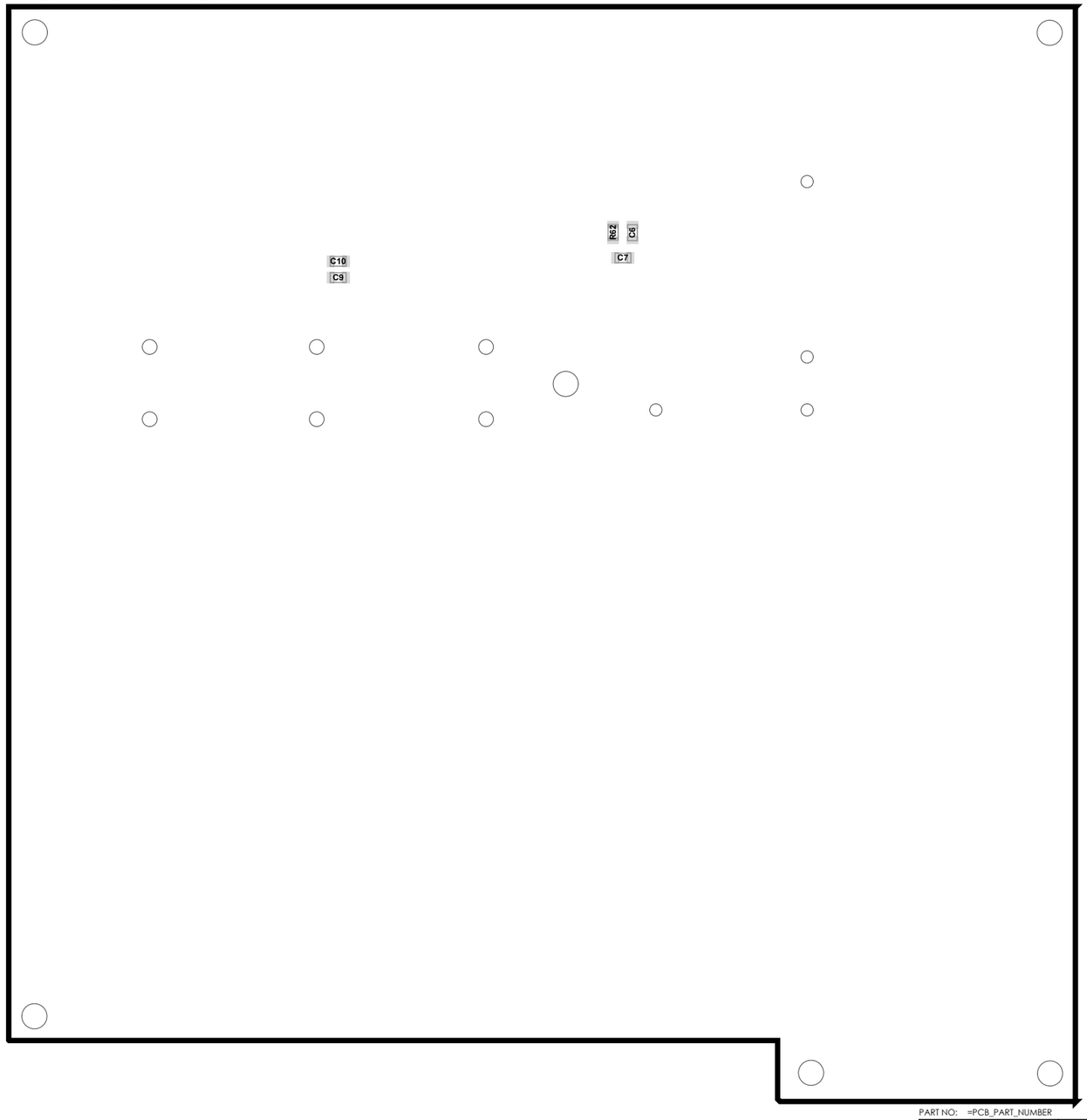

.lt

PART NO: =PCB_PART_NUMBER

APPROVALS		DATE
ENGINEER:	=PCB_ENGINEER	=PCB_ENGINEE
DESIGNER:	=PCB_DESIGNER	=PCB_DESIGNE
CHECKER:	=PCB_CHECKER	=PCB_CHECKE

Reference Documents

BOM DOC:	=DOC_NO_BOM
ASSY DOC:	=DOC_NO_FAB_DWG
SCH DOC:	=DOC_NO_SCH_DWG
PCB DOC:	=PCB_DWG_NO

THIRD ANGLE PROJECTION

NEXT ASSY	USED ON
APPLICATION	

Altium™

=Address1
=Address2
=Address3
=Address4

DESIGN ITEM: .Item

DESIGN ITEM REVISION: .ItemRevision

TITLE: =PCB_TITLE_1 =PCB_TITLE_2

SIZE: A3 | CAGE CODE: =CAGE_CO | DWG NO: | REV:

SCALE: | FILE NAME: OpenBMS.PCBDwf | SHEET: 6 OF 6

DWG NO: =DOC_NO_ASSY_ REV: .lte

THIS DOCUMENT AND THE DATA DISCLOSED HEREIN OR HEREWITH IS THE PROPERTY OF ALTIUM LIMITED AND MAY BE FREELY DISTRIBUTED IN WHOLE. NO RIGHTS ARE RESERVED OR EXPRESS OR IMPLIED WARANTEE GIVEN.

REVISION	DESCRIPTION	DATE	APPROVED

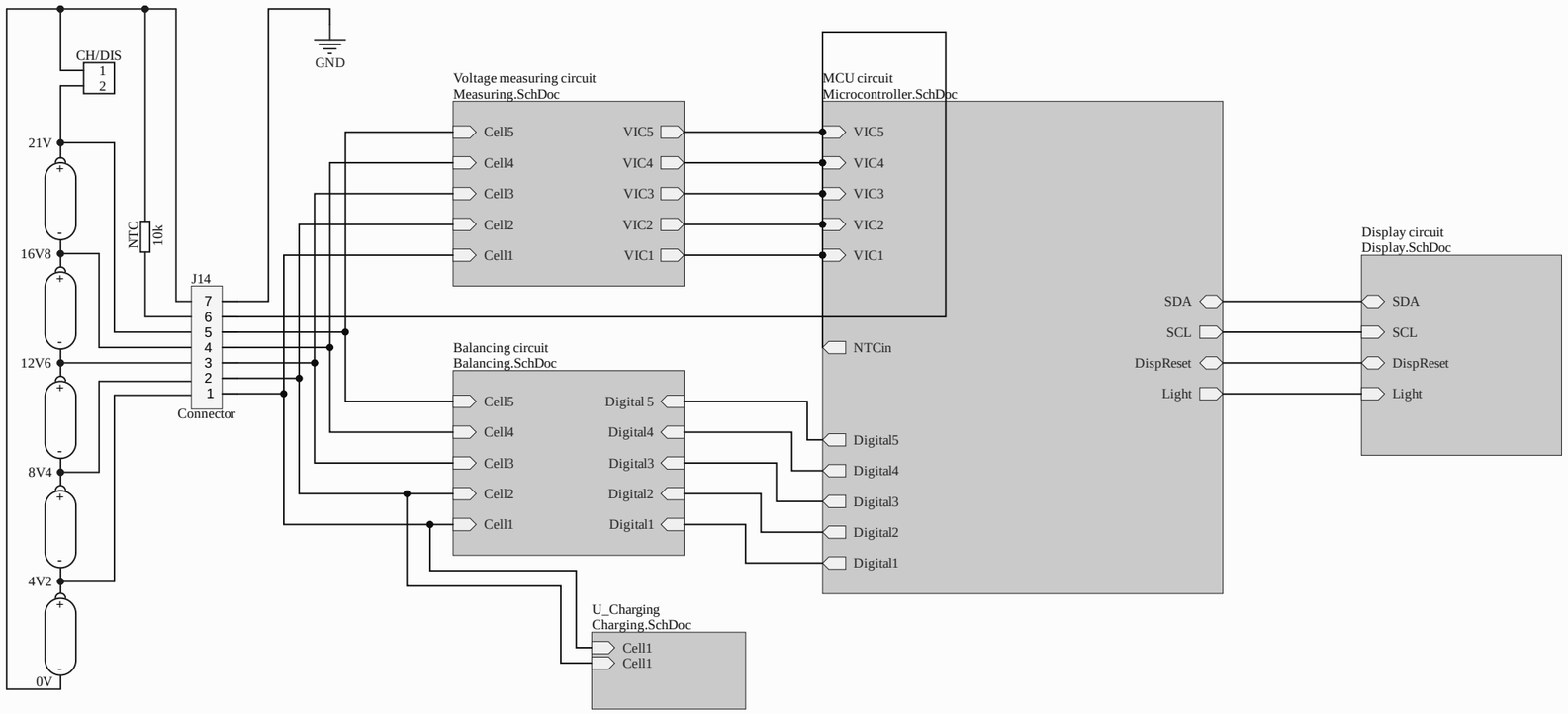

APPROVALS	DATE
ENG: *	
DSN: Kayoum Djedidi	--/--/--
CHK: 1	--/--/--
REFERENCE DOCUMENTS	
BOM:	
ASSY DWG:	
FAB DWG:	
PCB DWG:	

PROJECT: OpenBMS

PROJECT REVISION: Not in version control

DOCUMENT REVISION: Not in version control

DESIGN ITEM:

TITLE: OpenBMS Parent schematic

SIZE	CAGE CODE	DWG NO.	REV
A3			

SCALE: | FILE NAME: OpenBMS.SchDoc | SHEET 1 OF 5

THIS DOCUMENT AND THE DATA DISCLOSED HEREIN OR HEREWITH IS THE PROPERTY OF ALTIUM LIMITED AND MAY BE FREELY DISTRIBUTED IN WHOLE. NO RIGHTS ARE RESERVED OR EXPRESS OR IMPLIED WARANTEE GIVEN.

REVISION	DESCRIPTION	DATE	APPROVED

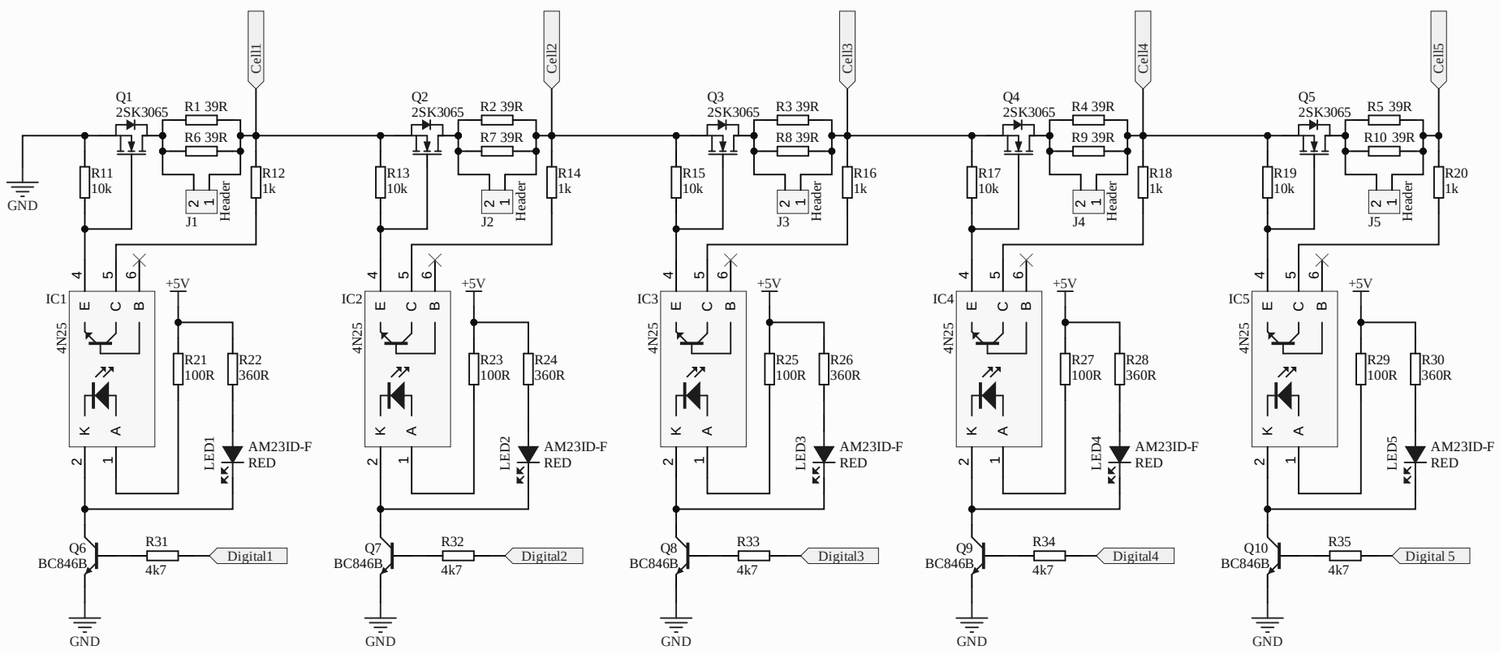

APPROVALS	DATE
ENG: *	--/--/--
DSN: *	--/--/--
CHK: *	--/--/--
REFERENCE DOCUMENTS	
BOM:	
ASSY DWG:	
FAB DWG:	
PCB DWG:	

PROJECT: *

Altium™

PROJECT REVISION: Not in version control | DOCUMENT REVISION: Not in version control | DESIGN ITEM:

TITLE: Cell Balancing

SIZE	CAGE CODE	DWG NO.	REV
A3			

SCALE: | FILE NAME: Balancing.SchDoc | SHEET * OF *

THIS DOCUMENT AND THE DATA DISCLOSED HEREIN OR HEREWITH IS THE PROPERTY OF ALTIUM LIMITED AND MAY BE FREELY DISTRIBUTED IN WHOLE. NO RIGHTS ARE RESERVED OR EXPRESS OR IMPLIED WARANTEE GIVEN.

REVISION	DESCRIPTION	DATE	APPROVED

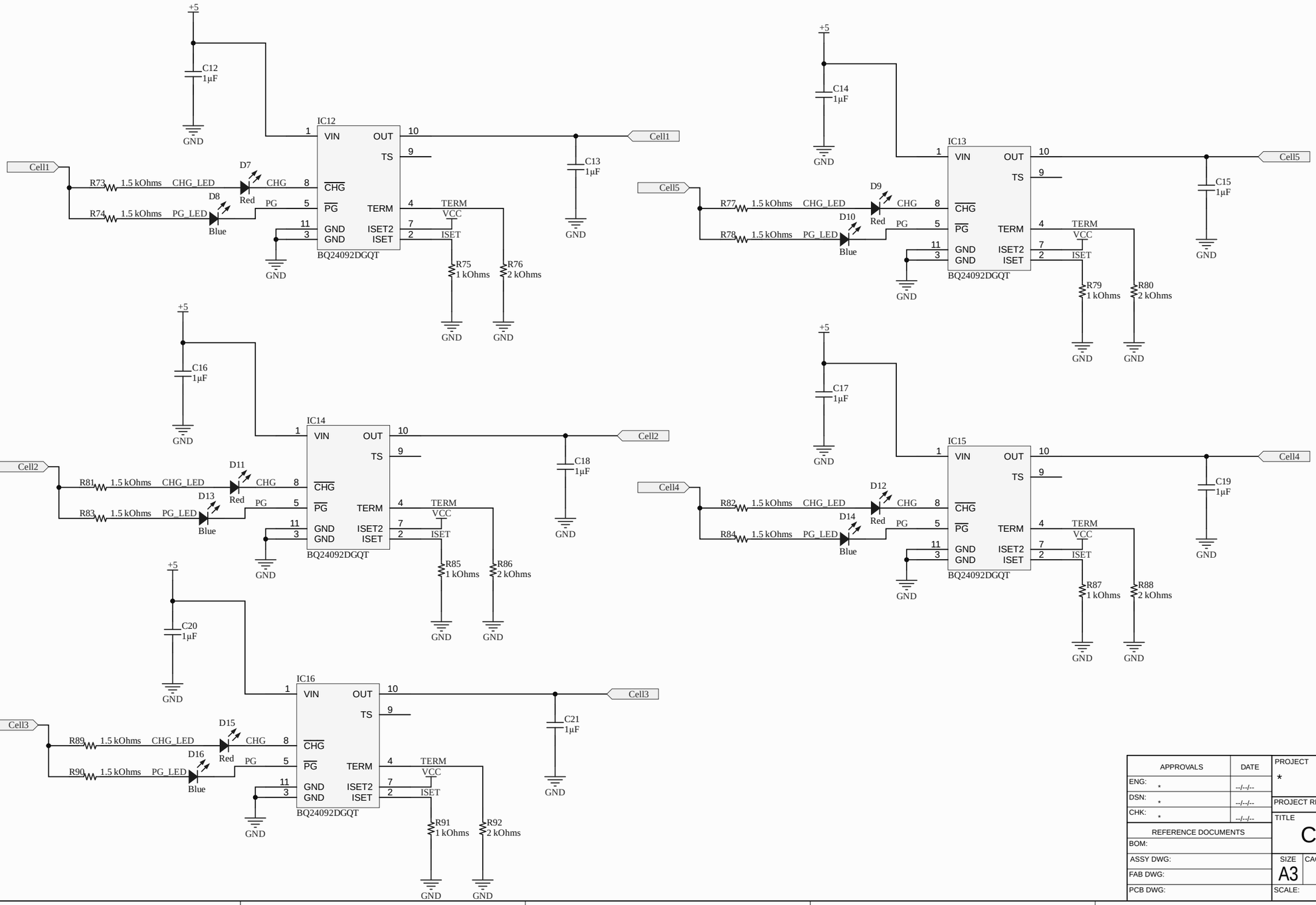

APPROVALS	DATE
ENG: *	--/--/--
DSN: *	--/--/--
CHK: *	--/--/--
REFERENCE DOCUMENTS	
BOM:	
ASSY DWG:	
FAB DWG:	
PCB DWG:	

PROJECT: *

Altium ™

PROJECT REVISION: Not in version control | DOCUMENT REVISION: Not in version control | DESIGN ITEM:

TITLE: Charging controller

SIZE	CAGE CODE	DWG NO.	REV
A3			

SCALE: | FILE NAME: Charging.SchDoc | SHEET * OF *

THIS DOCUMENT AND THE DATA DISCLOSED HEREIN OR HEREWITH IS THE PROPERTY OF ALTIUM LIMITED AND MAY BE FREELY DISTRIBUTED IN WHOLE. NO RIGHTS ARE RESERVED OR EXPRESS OR IMPLIED WARANTEE GIVEN.

REVISION	DESCRIPTION	DATE	APPROVED

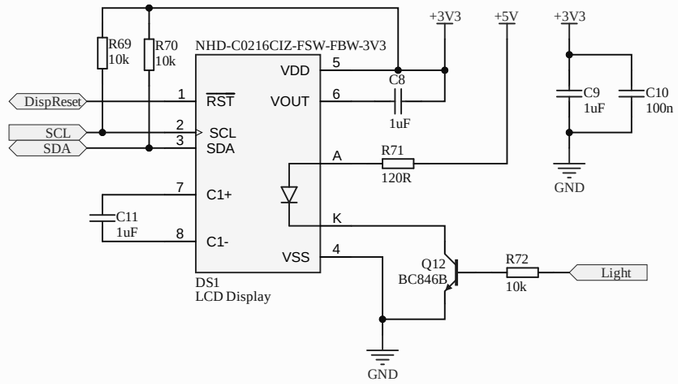

APPROVALS	DATE
ENG: *	--/--/--
DSN: *	--/--/--
CHK: *	--/--/--
REFERENCE DOCUMENTS	
BOM:	
ASSY DWG:	
FAB DWG:	
PCB DWG:	

PROJECT: *

Altium ™

PROJECT REVISION: Not in version control | DOCUMENT REVISION: Not in version control | DESIGN ITEM:

TITLE: LCD Display

SIZE	CAGE CODE	DWG NO.	REV
A3			

SCALE: | FILE NAME: Display.SchDoc | SHEET * OF *

THIS DOCUMENT AND THE DATA DISCLOSED HEREIN OR HEREWITH IS THE PROPERTY OF ALTIUM LIMITED AND MAY BE FREELY DISTRIBUTED IN WHOLE. NO RIGHTS ARE RESERVED OR EXPRESS OR IMPLIED WARANTEE GIVEN.

REVISION	DESCRIPTION	DATE	APPROVED

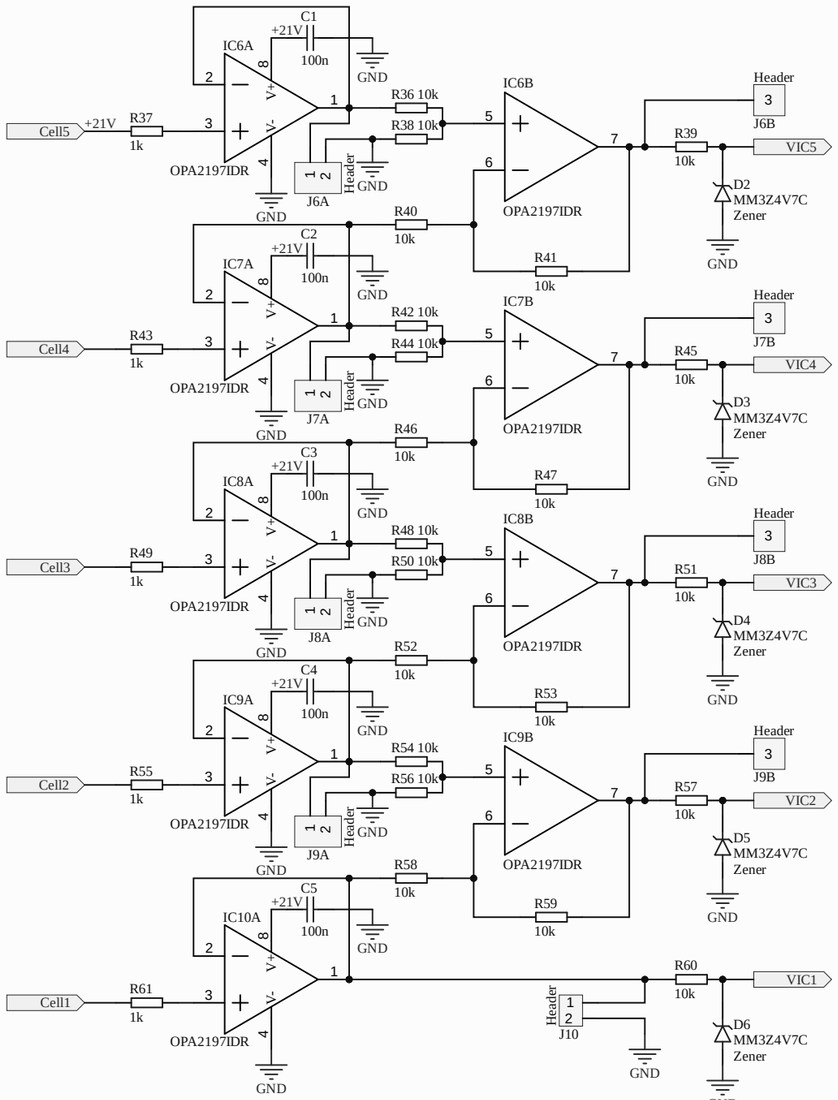

APPROVALS	DATE
ENG: *	--/--/--
DSN: *	--/--/--
CHK: *	--/--/--
REFERENCE DOCUMENTS	
BOM:	
ASSY DWG:	
FAB DWG:	
PCB DWG:	

PROJECT: *

PROJECT REVISION: Not in version control | DOCUMENT REVISION: Not in version control | DESIGN ITEM:

TITLE: Voltage Measurer

SIZE	CAGE CODE	DWG NO.	REV
A3			

SCALE: | FILE NAME: Measuring.SchDoc | SHEET * OF *

THIS DOCUMENT AND THE DATA DISCLOSED HEREIN OR HEREWITH IS THE PROPERTY OF ALTIUM LIMITED AND MAY BE FREELY DISTRIBUTED IN WHOLE. NO RIGHTS ARE RESERVED OR EXPRESS OR IMPLIED WARANTEE GIVEN.

REVISION	DESCRIPTION	DATE	APPROVED

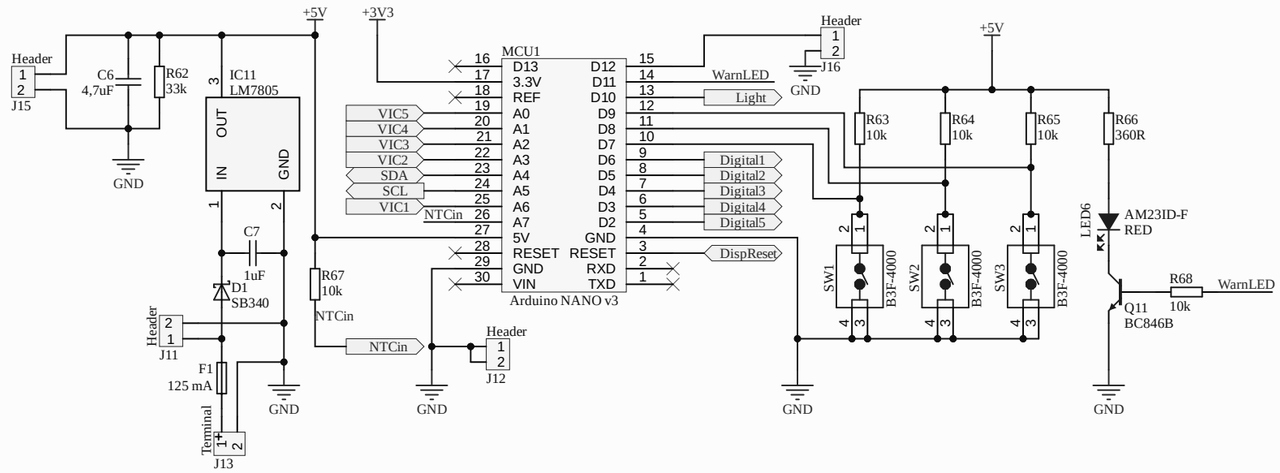

APPROVALS	DATE
ENG: *	--/--/--
DSN: *	--/--/--
CHK: *	--/--/--
REFERENCE DOCUMENTS	
BOM:	
ASSY DWG:	
FAB DWG:	
PCB DWG:	

PROJECT: *

PROJECT REVISION: Not in version control | DOCUMENT REVISION: Not in version control | DESIGN ITEM:

TITLE: MCU & Power management

SIZE	CAGE CODE	DWG NO.	REV
A3			

SCALE: | FILE NAME: Microcontroller.SchDoc | SHEET * OF *

Comment	Description	Designator	Footprint	LibRef	Quantity
100nF_35V	Capacitor [SMD]	C1, C2, C3, C4, C5, C10	C_0805	C_100nF_0805	6
4,7uF_35V	Capacitor [SMD]	C6	C_0805	C_4,7uF_0805	1
1uF_35V	Capacitor [SMD]	C7, C9	C_0805	C_1uF_0805	2
1uF_35V	Capacitor [SMD]	C8, C11	C_0603	C_1uF_0603	2
1µF	CAP CER 1UF 25V X5R 0603	C12, C13, C14, C15, C16, C17, C18, C19, C20, C21	CAP 0603_1608	CC0603KRX5R8BB105	10
SB340_DO-201AD	Diode Schottky 40V 3A [TH]	D1	DO-201AD	SB340_DO-201AD	1
MM3Z4V7C_SOD-323F	Zener Single Diode, 4.7 V, 200 mW [SMD]	D2, D3, D4, D5, D6	SODFL2512X90N	MM3Z4V7C_SOD-323F	5
Red	LED RED CLEAR 2SMD	D7, D9, D11, D12, D15	LED 0603_1608 RED	19-213USRC/S259/TR8	5
Blue	LED BLUE CLEAR 2SMD	D8, D10, D13, D14, D16	LED 0603_1608 BLUE	EAST16084BA8	5
LCD_FSTN_Display	NHD-C0216CIZ-FSW-FBW-3V3 LCD Display	DS1	LCD_NHD-C0216CIZ-FSW-FBW-3V3	LCD_FSTN_Display	1
PTF0078P	Fuse holder [TH]	F1	FUSE_5x20	PTF0078P	1
4N25_DIP6	Optocoupler [TH]	IC1, IC2, IC3, IC4, IC5	DIP6	4N25_DIP6	5
OPA2197IDR_8-SOIC	Dual OP AMP [TH]	IC6, IC7, IC8, IC9, IC10	SOIC8	OPA2197IDR_8-SOIC	5
LM7805_TO220	Linear Voltage Regulator 5V [TH] with thermal pad mounted to Fischer elektronik SK09 - 20mm heatsink with a screw and nut	IC11	TO220	LM7805_TO220	1
BQ24092DGQT	IC BATT CHARGER LI-ION 10MSOP	IC12, IC13, IC14, IC15, IC16	TI PDSO-10 DCQ	BQ24092DGQT	5
2.54mm pitch	Header, 2-Pin [TH]	J1, J2, J3, J4, J5, J10, J11, J12, J15, J16	HDR_1x2_2.54mm-MALE	Header 1x2	10
2.54mm pitch	Header, 3-Pin [TH]	J6, J7, J8, J9	HDR_1X3_2.54mm-MALE	Header 1x3AB	4
5mm pitch	PCB connector, 2-Pin [TH]	J13	TERMINAL_90_5MM	Terminal 1x2	1
Header connector 1x7	Header, 7-Pin [TH]	J14	HDR_1x7_2.54mm-MALE	Header connector 1x7	1
LED_SOT23	Red LED [SMD]	LED1, LED2, LED3, LED4, LED5, LED6	LED_SOT23	LED_SOT23	6
Arduino NANO v 3.0	Microcontroller [TH]	MCU1	Arduino_Nano_V3.0	Arduino NANO v 3.0	1
2SK3065_SOT89	N Channel MOSFET [SMD]	Q1, Q2, Q3, Q4, Q5	N_MOSFET	2SK3065_SOT89	5
BC846B_SOT23	NPN transistor [SMD]	Q6, Q7, Q8, Q9, Q10, Q11, Q12	NPN_BJT_SOT23	BC846B_SOT23	7
39R_2W	Resistor [SMD]	R1, R2, R3, R4, R5, R6, R7, R8, R9, R10	R_2512	R_39R_2512	10
10k_125mW	Resistor [SMD]	R11, R13, R15, R17, R19, R36, R38, R39, R40, R41, R42, R44, R45, R46, R47, R48, R50, R51, R52, R53, R54, R56, R57, R58, R59, R60, R63, R64, R65, R67, R68, R69, R70, R72	R_0805	R_10k_0805	34
1k_125mW	Resistor [SMD]	R12, R14, R16, R18, R20, R37, R43, R49, R55, R61	R_0805	R_1k_0805	10
100R_500mW	Resistor [SMD]	R21, R23, R25, R27, R29	R_0805	R_100R_0805	5
360R_125mW	Resistor [SMD]	R22, R24, R26, R28, R30, R66	R_0805	R_360R_0805	6
4k7_125mW	Resistor [SMD]	R31, R32, R33, R34, R35	R_0805	R_4k7_0805	5
33k_125mW	Resistor [SMD]	R62	R_0805	R_33k_0805	1
120R_125mW	Resistor [SMD]	R71	R_0805	R_120R_0805	1
1.5 kOhms	RES SMD 1.5K OHM 1% 1/10W 0603	R73, R74, R77, R78, R81, R82, R83, R84, R89, R90	RES 0603_1608	ERJ-3EKF1501V	10
1 kOhms	RES SMD 1K OHM 5% 1/4W 0603	R75, R79, R85, R87, R91	RES 0603_1608	ERJ-PA3J102V	5
2 kOhms	RES SMD 2K OHM 5% 1/4W 0603	R76, R80, R86, R88, R92	RES 0603_1608	ERJ-PA3J202V	5
B3F-4000	SPST Push button [TH]	SW1, SW2, SW3	PUSH_BUTTON	B3F-4000	3