Module 3 Assessment – Circuit Verse Full Adder

<u>HA:</u>

Screenshot :

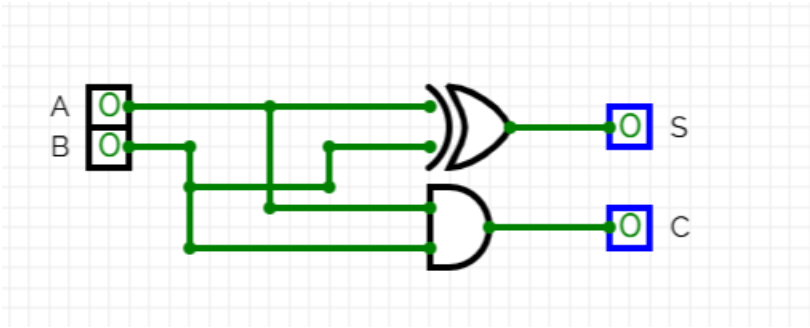

<u>FA:</u>

Screenshot:

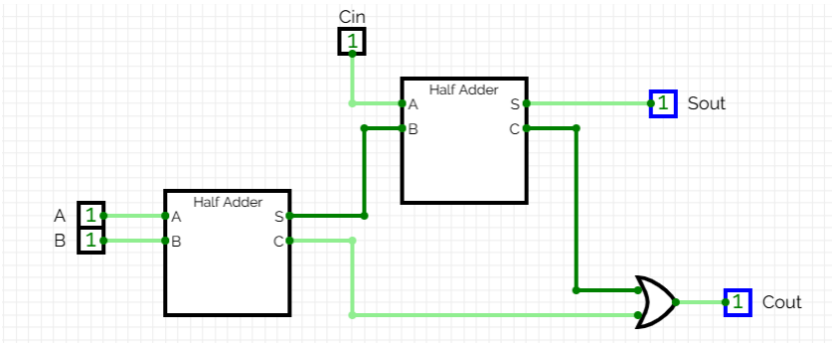

<u>4-bit Full Adder-Subtractor subcircuit:</u>

Screenshot:

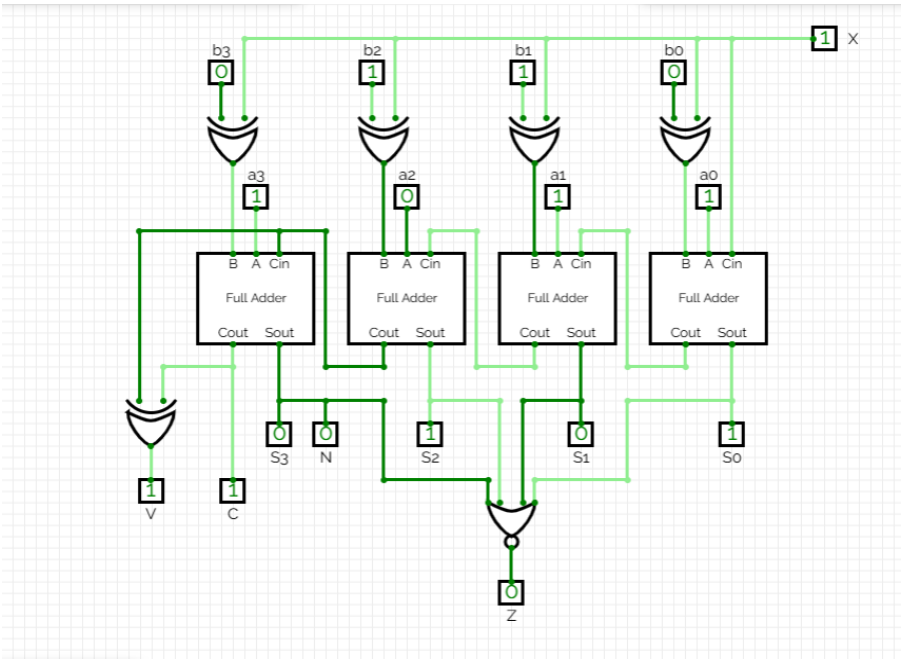

‘Main’ Circuit:

Test Case1: A = 0; B = 5; X = 0

Predicted answer:

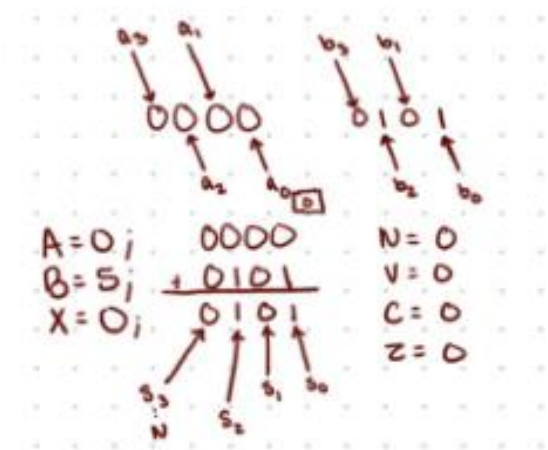

Main circuit (Actual):

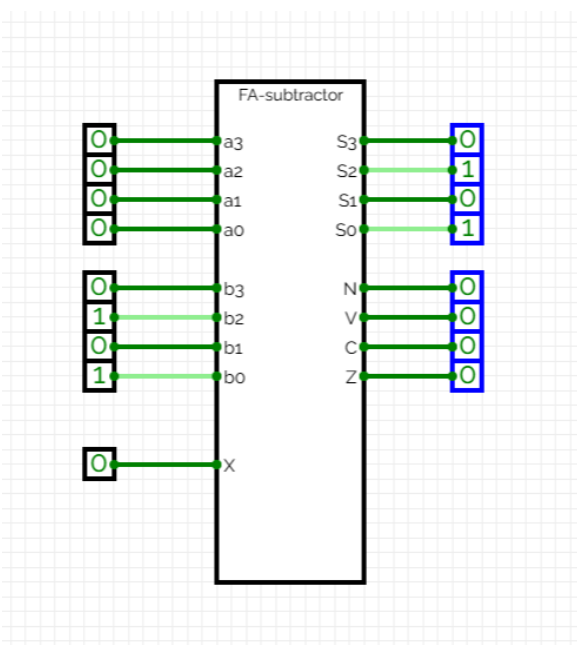

Test Case 2: A = 1; B = 1; X = 1

Predicted answer:

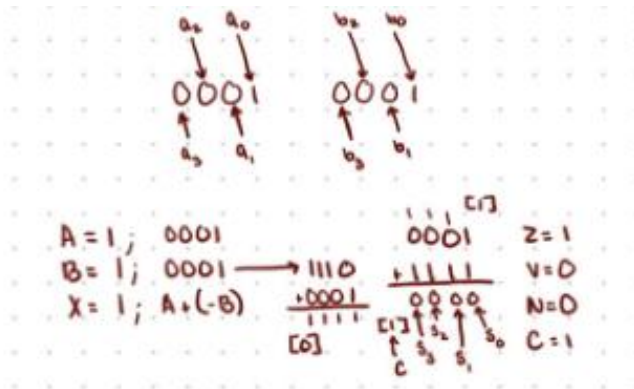

Main circuit (Actual):

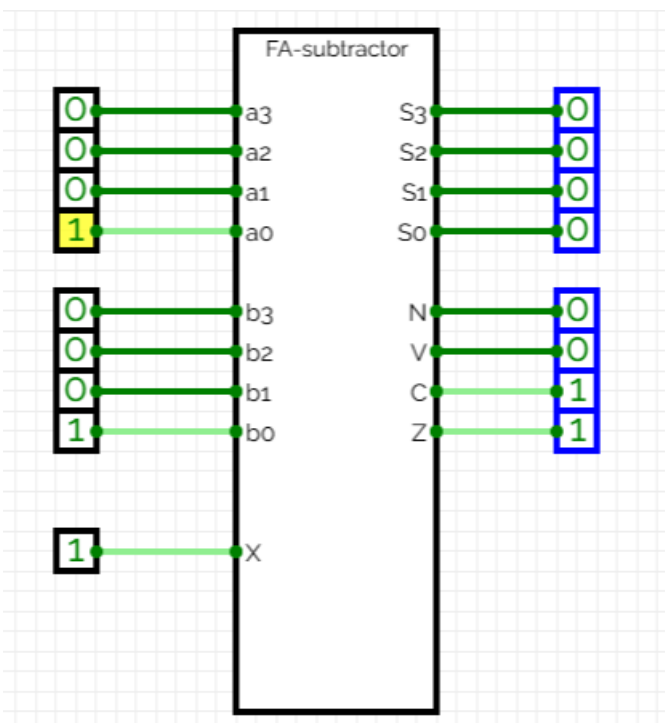

Test Case3: A = 1; B = - 2; X = 1

Predicted answer:

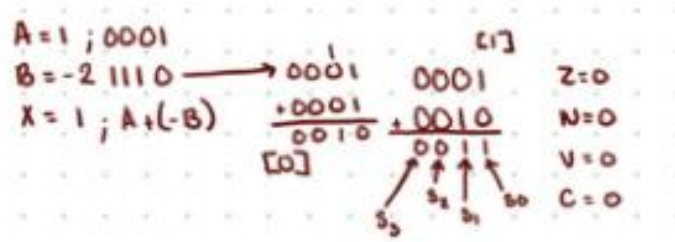

Main circuit (Actual):

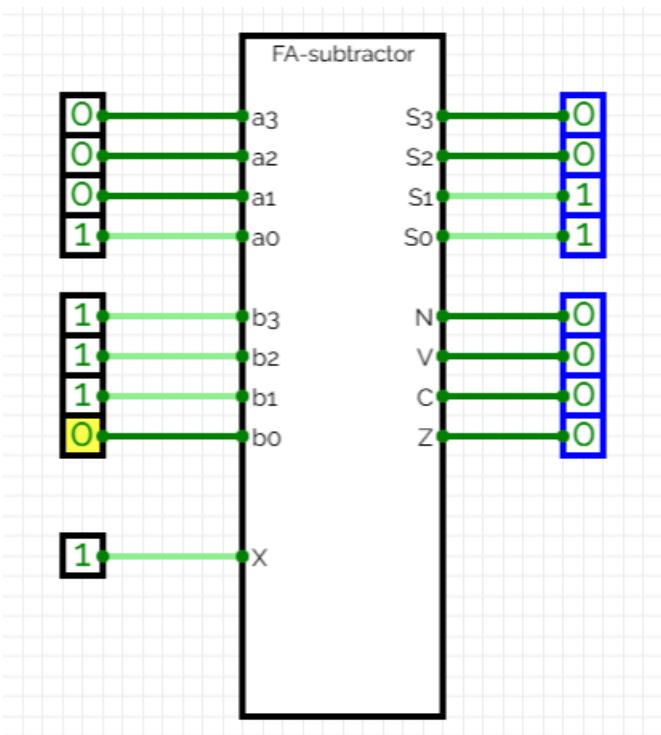

Test Case4: A = -2; B = -4; X = 0

Predicted answer:

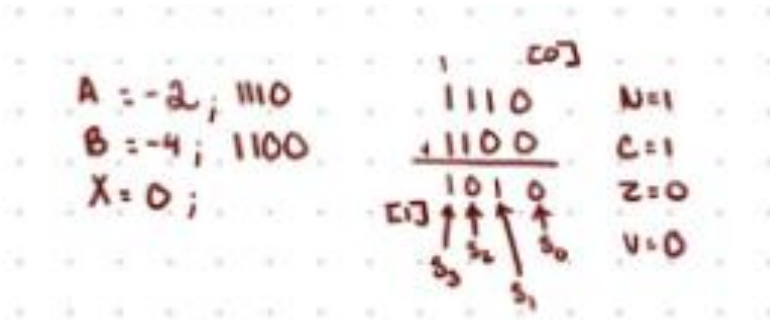

Main circuit (Actual):

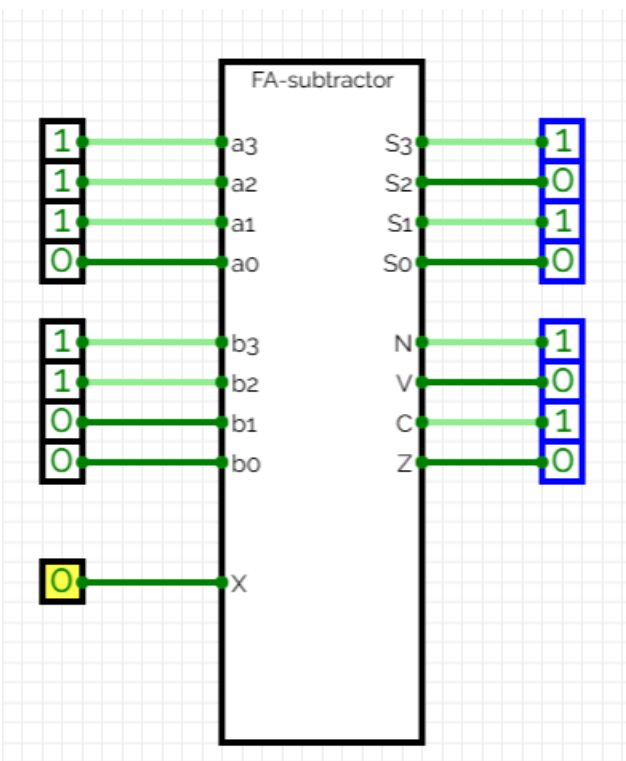

Test Case5: A = 7; B = 4; X = 0

Predicted answer:

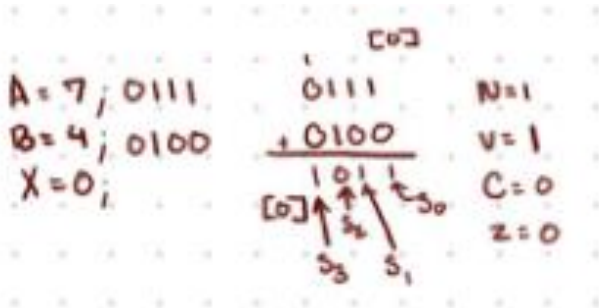

Main circuit (Actual):

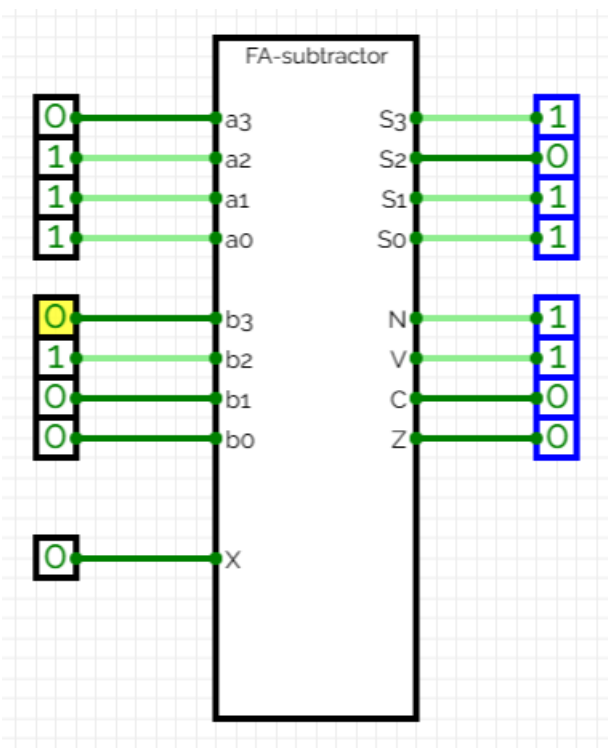

Test Case6: A = -5; B = 6; X = 1

Predicted answer:

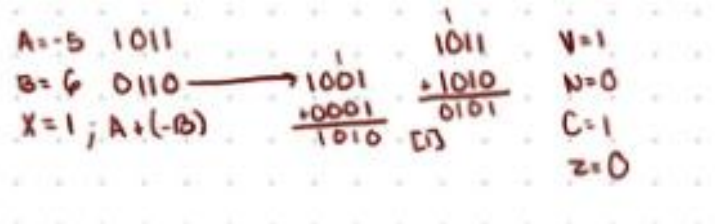

Main circuit (Actual):

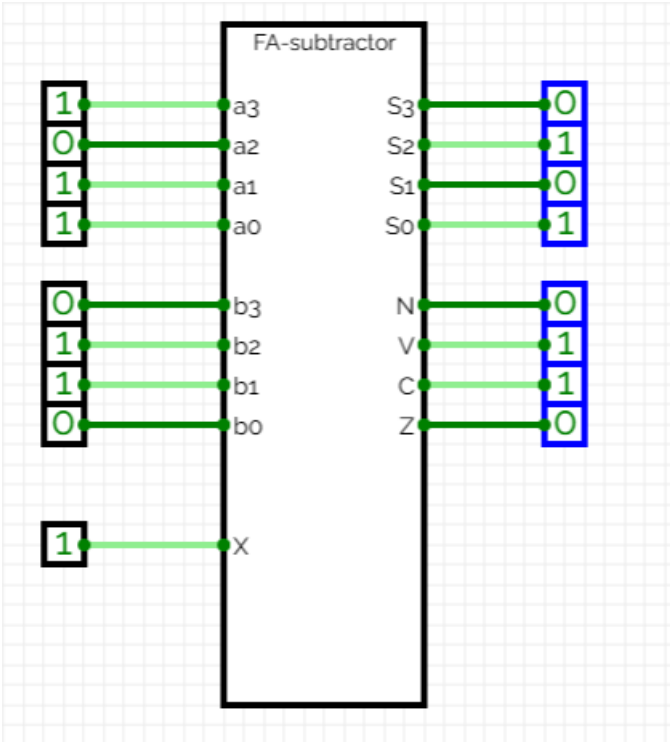

Test Case 7: A = 4; B = -8; X = 0

Predicted answer:

Main circuit (Actual):

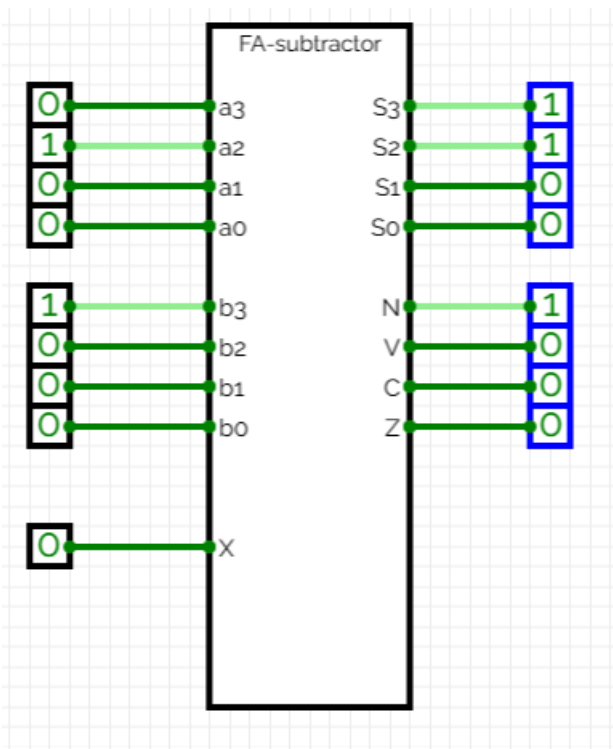

Test Case8: A = 3; B = -3; X = 1

Predicted answer:

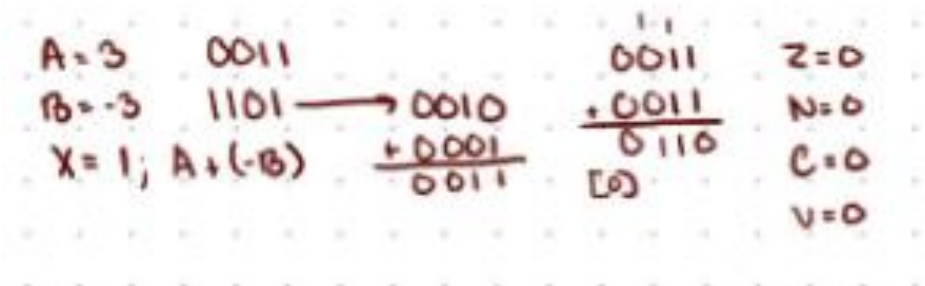
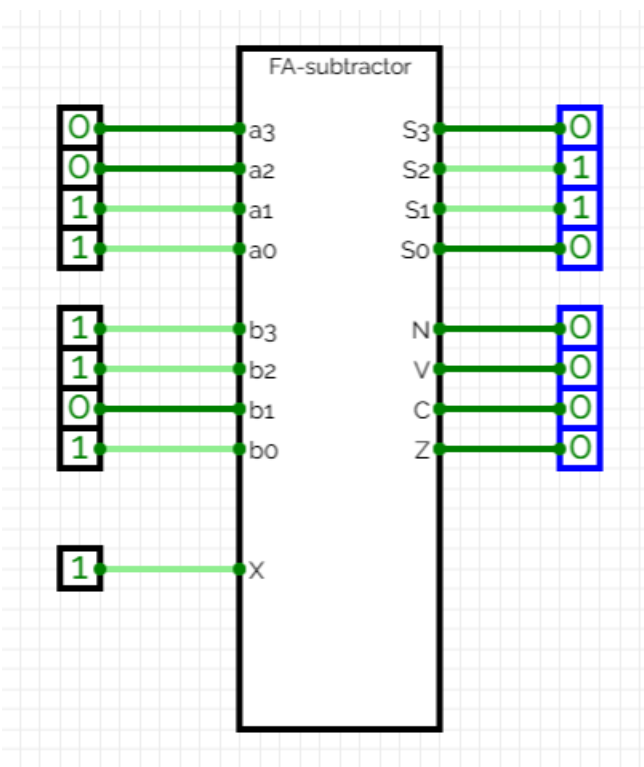
Main circuit (Actual):