Module 3 Assessment – Kayla Trogdon

1)

Pic 1:

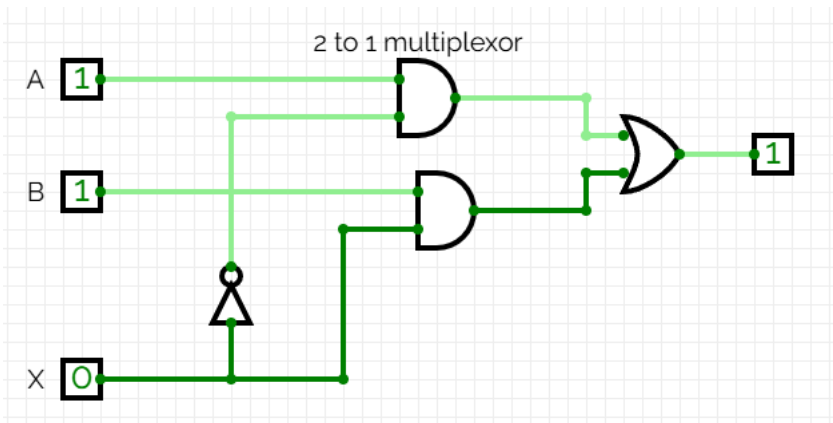

Pic 2:

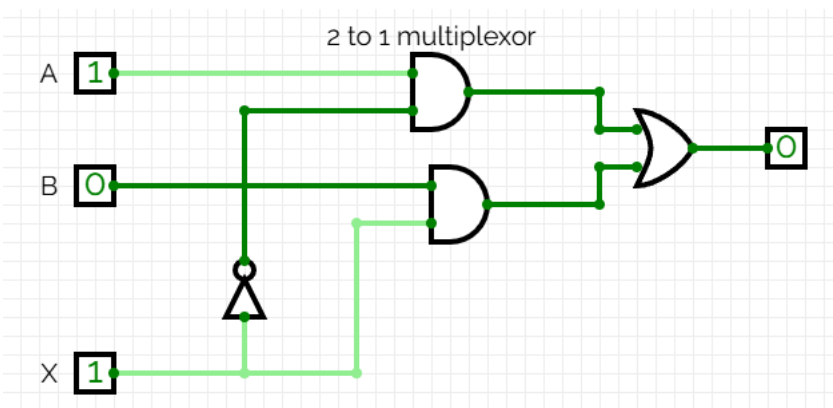

Truth Table:

X	A	B	$\overline{X}$	$A\overline{X}$	BX	F(X,A,B) = $A\overline{X} + BX$
0	0	0	1	0	0	0
0	0	1	1	0	0	0
0	1	0	1	1	0	1
0	1	1	1	1	0	1
1	0	0	0	0	0	0
1	0	1	0	0	1	1
1	1	0	0	0	0	0
1	1	1	0	0	1	1

2)

Pic 1:

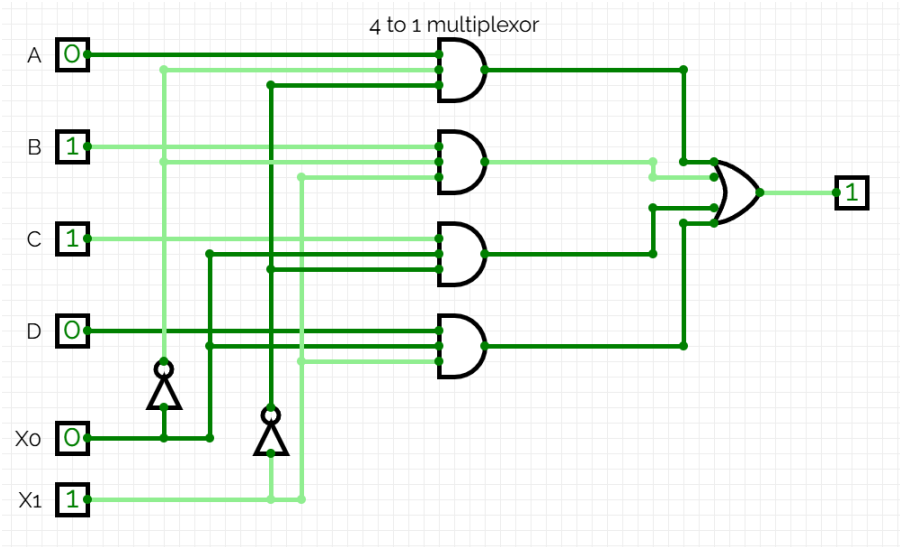
4 to 1 multiplexor
A
0
B
1
C
1
D
0
Xo
0
X1
1
1

Pic 2:

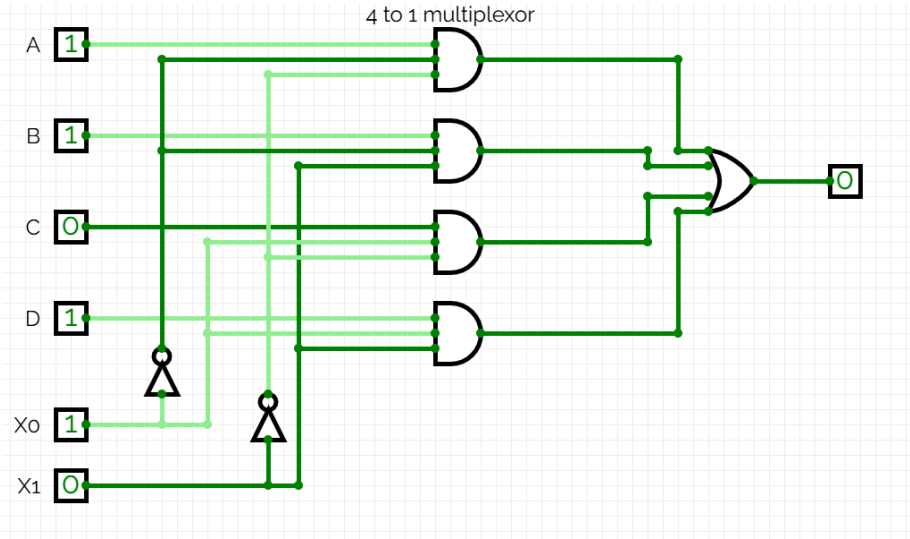
4 to 1 multiplexor
A
1
B
1
C
0
D
1
Xo
1
X1
0
0

3)

Pic 1:

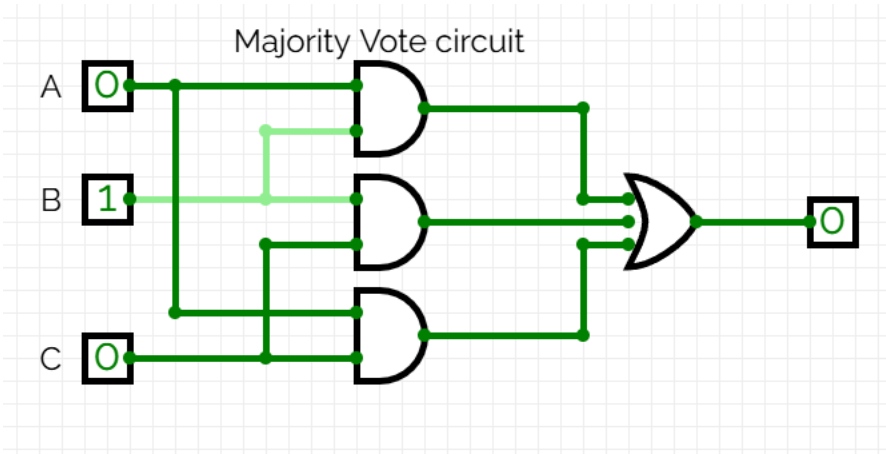

Pic 2:

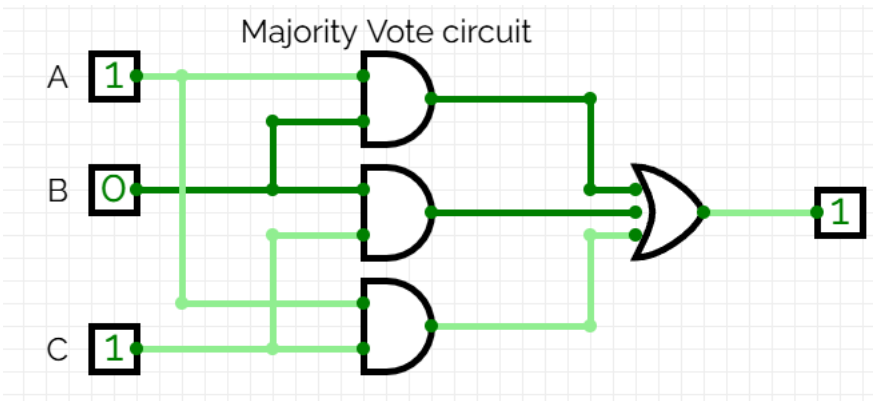

Truth Table:

Majority Vote Circuit

AB+BC+AC

A	B	C	AB	BC	AC	F(A,B,C)
0	0	0	0	0	0	0
0	0	1	0	0	0	0
0	1	0	0	0	0	0
0	1	1	0	1	0	1
1	0	0	0	0	0	0
1	0	1	0	0	1	1
1	1	0	1	0	0	1
1	1	1	1	1	1	1

4)

Pic 1:

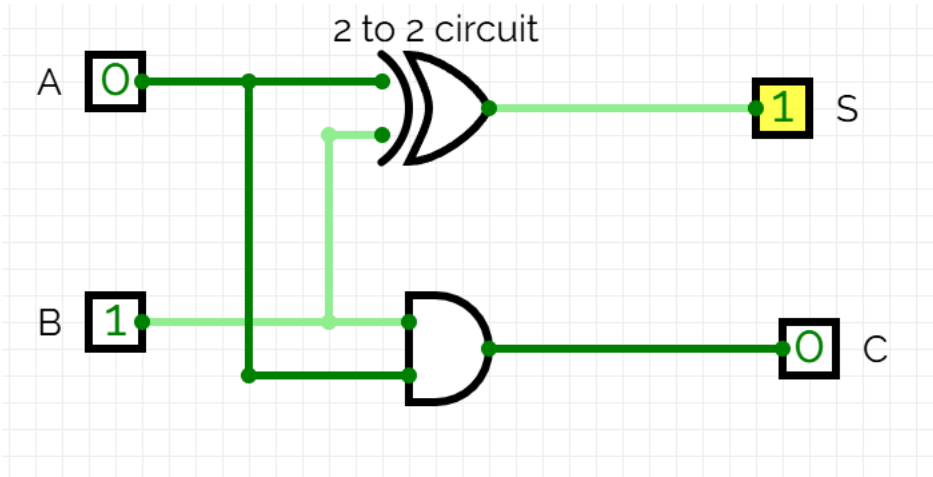

Pic 2:

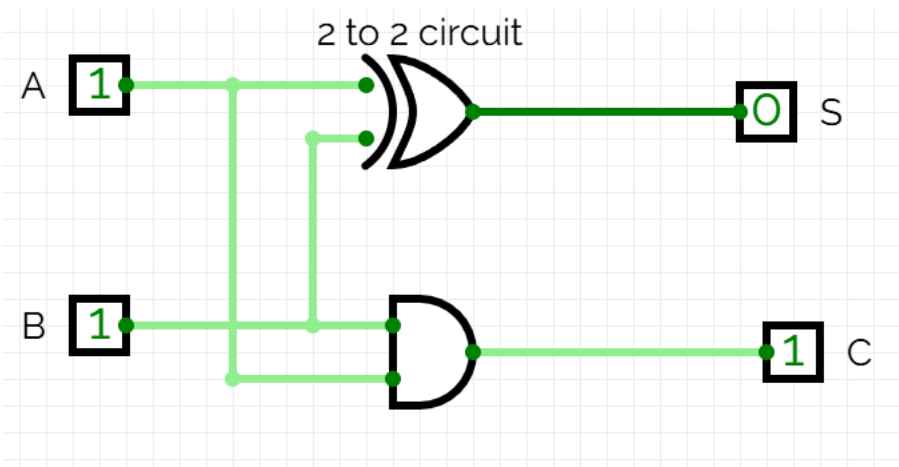

Truth Table:

2 Inputs and 2 outputs

A	B	$A \oplus B$	AB
0	0	0	0
0	1	1	0
1	0	1	0
1	1	0	1

5)

Pic 1:

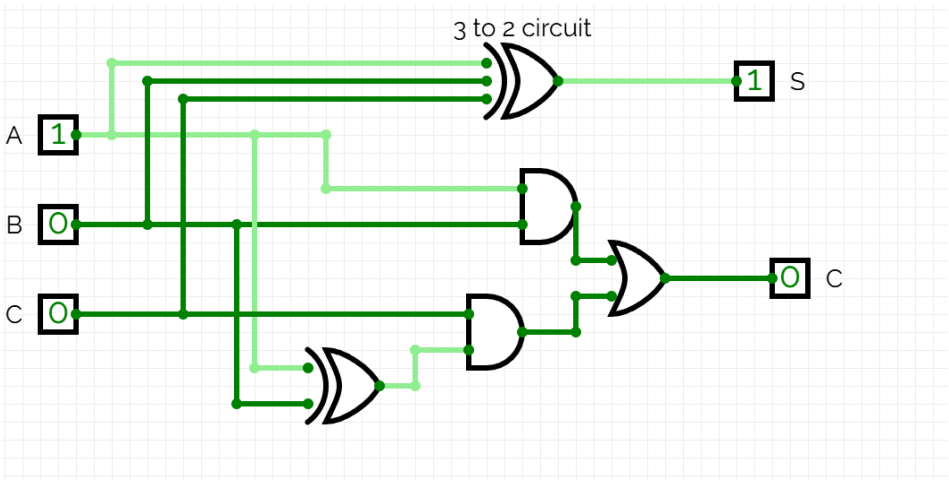

Pic 2:

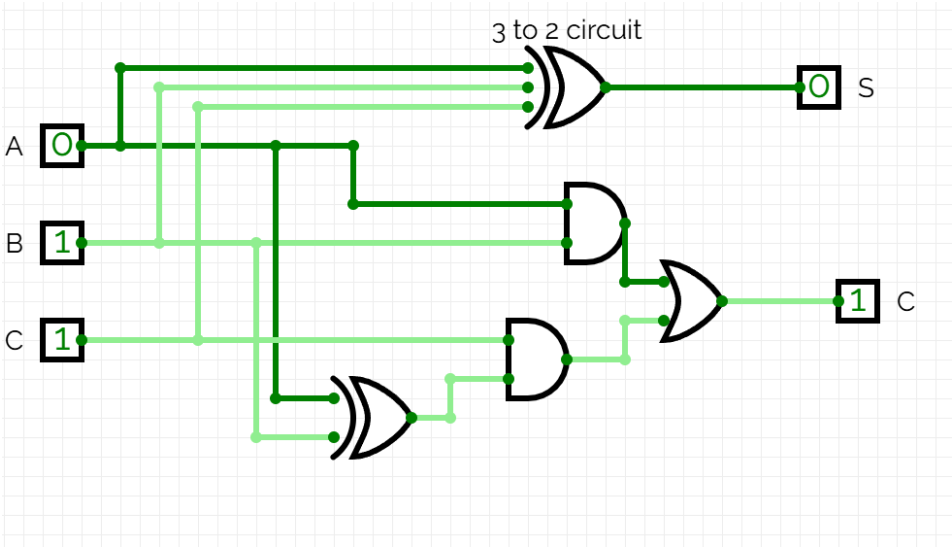

Truth Table:

3 Inputs and 2 outputs

A	B	C	AB	$A \oplus B$	$C(A \oplus B)$	$A \oplus B \oplus C$	$(AB) + (C(A \oplus B))$
0	0	0	0	0	0	0	0
0	0	1	0	0	0	1	0
0	1	0	0	1	0	1	0
0	1	1	0	1	1	0	1
1	0	0	0	1	0	1	0
1	0	1	0	1	1	0	1
1	1	0	1	0	0	0	1