Module 1 Assessment

1)

A	~A	~(A*A)
0	1	1
0	1	1
0	1	1
0	1	1
1	0	0
1	0	0
1	0	0
1	0	0

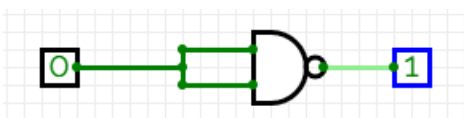

The circuit is performing the NOT function. The circuit would be useful since it minimizes the gates needed to get the inverted value of the input. It provides a more efficient version that doesn't solely rely on a NOT gate for an inverted value.

2)

a)

a) $X \cdot (X + Y) = X$

$\underbrace{X \cdot X}_{X} + X \cdot Y$ (Distributive)

$X + X \cdot Y$ (Simplify)

$(1 \cdot X) \longrightarrow$ (Identity)

$(1 \cdot X) + (X \cdot Y)$ (Factor)

$X \cdot \underbrace{(1 + Y)}_{1}$ (OR property)

$\underbrace{X \cdot 1}_{X} = X$ (AND property)

b)

b) $X \cdot (\overline{X} + Y) = X \cdot Y$

$X \cdot \overline{X} + X \cdot Y$ (Distributive)

$0 + X \cdot Y$ (AND property)

$X \cdot Y$ ($0 + X = X$; OR property)

c)

c) $(X+Y)\cdot(X+\overline{Y}) = X$

$\underbrace{X\cdot X}_{X} + X\cdot\overline{Y} + Y\cdot X + \underbrace{Y\cdot\overline{Y}}_{0}$ (Distributive)

$X + X\overline{Y} + XY + 0$ (AND property)

$X(\underbrace{1+\overline{Y}+Y})$ (Factor)

$X(1)$ (OR property)

X

d)

d) $(X+Y)\cdot(\overline{X}+Z) = X\cdot Z + \overline{X}\cdot Y$

$X\overline{X} + XZ + \overline{X}Y + YZ$ (Distributive)

$0 + XZ + \overline{X}Y + \underline{YZ}$ (AND property)

$XZ + \overline{X}Y$ (Consensus theorem)

e)

e) $(X+\overline{Y})\cdot(\overline{X}+Z)\cdot(Y+\overline{Z}) = X\cdot Y\cdot Z + \overline{X}\cdot\overline{Y}\cdot\overline{Z}$

$\underline{X\overline{X}} + XZ + \overline{Y}\,\overline{X} + \overline{Y}Z$

$XZ + \overline{Y}\,\overline{X} + \overline{Y}Z$ (AND property)

$(XZ + \overline{Y}\,\overline{X} + \overline{Y}Z)\cdot(Y+\overline{Z})$

$XZY + \underbrace{\overline{Y}\,\overline{X}Y}_{0} + \underbrace{\overline{Y}ZY}_{0} + \underbrace{XZ\overline{Z}}_{0} + \overline{Y}\,\overline{X}\,\overline{Z} + \underbrace{\overline{Y}Z\overline{Z}}_{0}$

$XZY + 0 + 0 + 0 + \overline{X}\,\overline{Y}\,\overline{Z} + 0$ ($\overline{Y}\cdot Y = 0$, $\overline{Z}\cdot Z = 0$; AND property)

$XZY + \overline{X}\,\overline{Y}\,\overline{Z}$

3)

a)

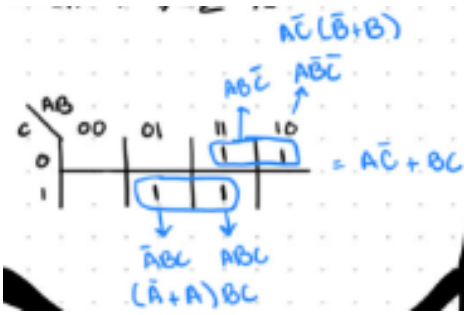

b)

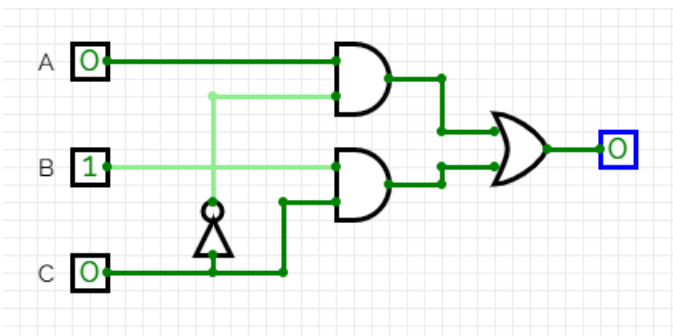

The circuit is performing a 2-to-1 multiplexor due to A being associated, “turned on”, with the NOT C value. And with the regular C value, B would then be associated, “turned on”, and A wouldn’t be regarded with this output value.

c)

$$F = A\bar{C} + BC$$

$$\bar{\bar{F}} = F = \overline{\overline{(A\bar{C}) + (BC)}}$$

$$= \overline{\overline{(A\bar{C})} \cdot \overline{(BC)}} \rightarrow \overline{(\bar{A} + \bar{\bar{C}}) \cdot (\bar{B} + \bar{C})}$$

$$\bar{\bar{F}} = \overline{(\bar{A} + C) \cdot (\bar{B} + \bar{C})}$$

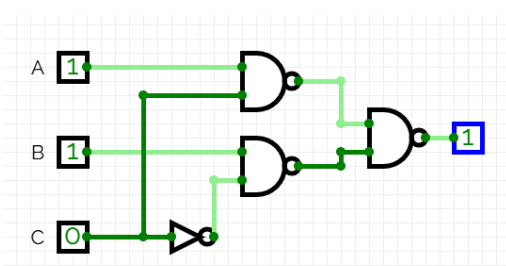

4)

a)

A	B	C	D	F(A,B,C,D)	
0	0	0	0	0	
0	0	0	1	1	$\bar{A}\bar{B}\bar{C}D$
0	0	1	0	1	$\bar{A}\bar{B}C\bar{D}$
0	0	1	1	0	
0	1	0	0	1	$\bar{A}B\bar{C}\bar{D}$
0	1	0	1	0	
0	1	1	0	0	
0	1	1	1	1	$\bar{A}BCD$
1	0	0	0	1	$A\bar{B}\bar{C}\bar{D}$
1	0	0	1	0	
1	0	1	0	0	
1	0	1	1	1	$A\bar{B}CD$
1	1	0	0	0	
1	1	0	1	1	$AB\bar{C}D$
1	1	1	0	1	$ABC\bar{D}$
1	1	1	1	0	

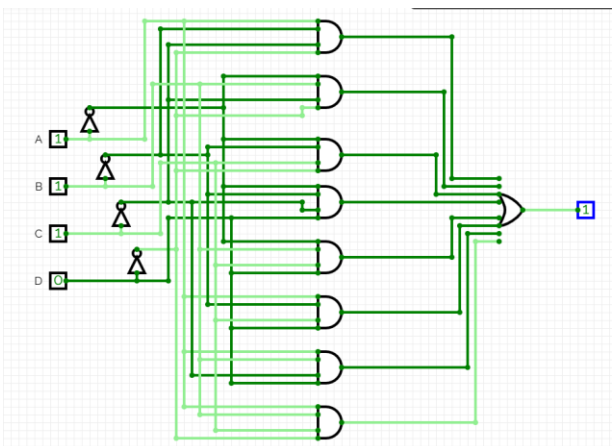

b)

CD \ AB	00	01	11	10
00		1		1
01	1		1	
11		1		1
10	1		1	

This Karnaugh map of the function can be reduced down to XOR function for A,B,C,D. The function before it was reduced showed that the output was 1 if there was an odd number of variables turned on the circuit. The XOR function runs the same idea, since the multiple inputs would go through the same rules for the odd detectors in the function.