International Journal of Forecasting 39 (2023) 1145–1162

Contents lists available at ScienceDirect

International Journal of Forecasting

journal homepage: www.elsevier.com/locate/ijforecast

Forecasting CPI inflation components with Hierarchical Recurrent Neural Networks☆

Oren Barkan [a], Jonathan Benchimol [b], Itamar Caspi [b], Eliya Cohen [c], Allon Hammer [c], Noam Koenigstein [c,*]

[a] Department of Computer Science, The Open University, Israel
[b] Research Department, Bank of Israel, Israel
[c] Iby and Aladar Fleischman Faculty of Engineering, Tel Aviv University, Israel

ARTICLE INFO

Keywords:
Inflation Forecasting
Disaggregated Inflation
Consumer Price Index
Machine Learning
Gated Recurrent Unit
Recurrent Neural Networks

ABSTRACT

We present a hierarchical architecture based on recurrent neural networks for predicting disaggregated inflation components of the Consumer Price Index (CPI). While the majority of existing research is focused on predicting headline inflation, many economic and financial institutions are interested in its partial disaggregated components. To this end, we developed the novel Hierarchical Recurrent Neural Network (HRNN) model, which utilizes information from higher levels in the CPI hierarchy to improve predictions at the more volatile lower levels. Based on a large dataset from the US CPI-U index, our evaluations indicate that the HRNN model significantly outperforms a vast array of well-known inflation prediction baselines. Our methodology and results provide additional forecasting measures and possibilities to policy and market makers on sectoral and component-specific price changes.

© 2022 The Authors. Published by Elsevier B.V. on behalf of International Institute of Forecasters. This is an open access article under the CC BY license (http://creativecommons.org/licenses/by/4.0/).

1. Introduction

The consumer price index (CPI) is a measure of the average change over time in the prices paid by a representative consumer for a common basket of goods and services. The CPI attempts to quantify and measure the average cost of living in a given country by estimating the purchasing power of a single unit of currency. Therefore, it is the key macroeconomic indicator for measuring inflation (or deflation). As such, the CPI is a major driving force in the economy, influencing a plethora of market dynamics. In this work, we present a novel model based on recurrent neural networks (RNNs) for forecasting disaggregated CPI inflation components.

In the mid-1980s, many advanced economies began a major process of disinflation known as the Great Moderation. This period was characterized by steady low inflation and moderate yet steady economic growth (Faust & Wright, 2013). Later, the Global Financial Crisis (GFC) of 2008, and more recently the economic effects of the Covid-19 pandemic, were met with unprecedented monetary policies, potentially altering the underlying inflation dynamics worldwide (Bernanke et al., 2018; Gilchrist et al., 2017; Woodford, 2012). While economists still debate the underlying forces that drive inflation, all agree on the importance and value of contemporary inflation research, measurements, and estimation. Moreover, the CPI is a composite index comprising an elaborate hierarchy of sub-indexes each with its own dynamics and driving forces. Hence, in order to better understand inflation dynamics, it is useful to deconstruct the CPI index and look into the specific disaggregated components underneath the main headline.

☆ The views expressed in this paper are those of the authors and do not necessarily reflect the views of the Bank of Israel.

* Corresponding author.
E-mail address: noamk@tauex.tau.ac.il (N. Koenigstein).

https://doi.org/10.1016/j.ijforecast.2022.04.009
0169-2070/© 2022 The Authors. Published by Elsevier B.V. on behalf of International Institute of Forecasters. This is an open access article under the CC BY license (http://creativecommons.org/licenses/by/4.0/).

In the US, the CPI is calculated and reported by the Bureau of Labor Statistics (BLS). It represents the cost of a basket of goods and services across the country on a monthly basis. The CPI is a hierarchical composite index system that partitions all consumer goods and services into a hierarchy of increasingly detailed categories. In the US, the top CPI headline is composed of eight major sector indexes: (1) Housing, (2) Food and Beverages, (3) Medical Care, (4) Apparel, (5) Transportation, (6) Energy, (7) Recreation, and (8) Other Goods and Services. Each sector is composed of finer and finer sub-indexes until the entry levels or "leaves" are reached. These entry-level indexes represent concrete measurable products or services whose price levels are being tracked. For example, the White Bread entry is classified under the following eight-level hierarchy: All Items → Food and Beverages → Food at Home → Cereals and Bakery Products → Cereals and Cereal Products → Bakery Products → Bread → White Bread.

The ability to accurately estimate the upcoming disaggregated inflation rate is of high interest to policymakers and market players: Inflation forecasting is a critical tool for adjusting monetary policies around the world (Friedman, 1961). Central banks predict future inflation trends to justify interest rate decisions and to control and maintain inflation around their targets. Better understanding of upcoming inflation dynamics at the component level can help inform and elucidate decision-makers for optimal monetary policy (Ida, 2020). Predicting disaggregated inflation rates is also important to fiscal authorities that wish to forecast sectoral inflation dynamics to adjust social security payments and assistance packages to specific industrial sectors. In the private sector, investors in fixed-income markets wish to estimate future sectorial inflation in order to foresee upcoming trends in discounted real returns. Additionally, some private firms need to predict specific inflation components in order to forecast price dynamics and mitigate risks accordingly. Finally, both government and private debt levels and interest payments heavily depend on the expected path of inflation. These are just a few examples that emphasize the importance of disaggregated inflation forecasting.

Most existing inflation forecasting models attempt to predict the headline CPI while implicitly assuming that the same approach can be effectively applied to its disaggregated components (Faust & Wright, 2013). However, as we show below, and in line with the literature, the disaggregated components are more volatile and harder to predict. Moreover, changes in the CPI components are more prevalent at the lower levels than up at the main categories. As a result, lower hierarchy levels often have fewer historical measurements for training modern machine learning algorithms.

In this work, we present the hierarchical recurrent neural network (HRNN) model, a novel model based on RNNs that utilizes the CPI's inherent hierarchy for improved predictions at its lower levels. The HRNN is a hierarchical arrangement of RNNs analogous to the CPI's hierarchy. This architecture allows information to propagate from higher to lower levels in order to mitigate volatility and information sparsity that otherwise impedes advanced machine learning approaches. Hence, a key advantage of the HRNN model stems from its superiority at inflation predictions at lower levels of the CPI hierarchy. Our evaluations indicate that the HRNN outperforms many existing baselines at inflation forecasting of different CPI components below the top headline and across different time horizons.

Finally, our data and code are publicly available on GitHub[1] to enable reproducibility and foster future evaluations of new methods. By doing so, we comply with the call to make data and algorithms more open and transparent to the community (Makridakis et al., 2018, 2020).

The remainder of the paper is organized as follows. Section 2 presents a literature review of baseline inflation forecasting models and machine learning models. Section 3 explains RNN methodologies. Our novel HRNN model is presented in Section 4. Section 5 describes the price data and data transformations. In Section 6, we present our results and compare them to alternative approaches. Finally, we conclude in Section 7 by discussing potential implications of the current research and several future directions.

2. Related work

While inflation forecasting is a challenging task of high importance, the literature indicates that significant improvement upon basic time-series models and heuristics is hard to achieve. Indeed, Atkeson & Ohanian (2001) found that forecasts based on simple averages of past inflation were more accurate than all other alternatives, including the canonical Phillips curve and other forms of structural models. Similarly, Stock & Watson (2007, 2010) provided empirical evidence for the superiority of univariate models in forecasting inflation during the Great Moderation period (1985 to 2007) and during the recovery following the GFC. More recently, Faust & Wright (2013) conducted an extensive survey of inflation forecasting methods and found that a simple "glide path" prediction from the current inflation rate performs as well as model-based forecasts for long-run inflation rates and often outperforms them.

Recently, an increasing amount of effort has been directed towards the application of machine learning models for inflation forecasting. For example, Medeiros et al. (2021) compared inflation forecasting with several machine learning models such as lasso regression, random forests, and deep neural networks. However, Medeiros et al. (2021) mainly focused on using exogenous features such as cash and credit availability, online prices, housing prices, consumer data, exchange rates, and interest rates. When exogenous features are considered, the emphasis shifts from learning the endogenous time series patterns to effectively extracting the predictive information from the exogenous features. In contrast to Medeiros et al. (2021), we preclude the use of any exogenous features and focus on harnessing the internal patterns of

[1] The code and data are available at https://github.com/AllonHammer/CPI_HRNN.

the CPI series. Moreover, unlike previous works that dealt with estimating the main headline, this work is focused on predicting the disaggregated indexes that comprise the CPI.

In general, machine learning methods flourish where data are found in abundance and many training examples are available. Unfortunately, this is not the case with CPI inflation data. While a large amount of relevant exogenous features exists, there are only 12 monthly readings annually. Hence, the amount of available training examples is limited. Furthermore, Stock & Watson (2007) show that statistics such as the average inflation rate, conditional volatility, and persistency levels are shifting in time. Hence, inflation is a non-stationary process, which further limits the amount of relevant historical data points.

Goulet Coulombe et al. (2022), Chakraborty & Joseph (2017), Athey & Susan (2018), and Mullainathan & Spiess (2017) present comprehensive surveys of general machine learning applications in economics. Here, we do not attempt to cover the plethora of research employing machine learning for economic forecasting. Instead, we focus on models that apply neural networks to CPI forecasting in the next section.

This paper joins several studies that apply neural network methods to the specific task of inflation forecasting: Nakamura (2005) employed a simple feed-forward network to predict quarterly CPI headline values. Special emphasis is placed on early stopping methodologies in order to prevent over-fitting. Their evaluations are based on US CPI data from 1978–2003, and predictions are compared against several autoregressive (AR) baselines. Presented in Section 6, our evaluations confirm the findings of Nakamura (2005), that a fully connected network is indeed effective at predicting the headline CPI. However, when the CPI components are considered, we show that the model in this work demonstrates superior accuracy.

Choudhary & Haider (2012) used several neural networks to forecast monthly inflation rates in 28 countries in the Organisation for Economic Cooperation and Development (OECD). Their findings showed that, on average, neural network models were superior in 45% of the countries while simple AR models of order one (AR1) performed better in 23% of the countries. They also proposed combining an ensemble of multiple networks arithmetically for further accuracy.

Chen et al. (2001) explored semi-parametric nonlinear autoregressive models with exogenous variables (NLARX) based on neural networks. Their investigation covered a comparison of different nonlinear activation functions such as the sigmoid activation, radial basis activation, and ridgelet activation.

McAdam & McNelis (2005) explored thick neural network models that represent trimmed-mean forecasts from several models. By combining the network with a linear Phillips curve model, they predict the CPI for the US, Japan, and Europe at different levels.

In contrast to the aforementioned works, our model predicts monthly CPI values in *all* hierarchy levels. We utilize information patterns from higher levels of the CPI hierarchy in order to assist the predictions at lower levels. Such predictions are more challenging due to the inherent noise and information sparsity at the lower levels. Moreover, the HRNN model in this work is better equipped to harness sequential patterns in the data by employing recurrent neural networks. Finally, we exclude the use of exogenous variables and rely solely on historical CPI data to focus on internal CPI pattern modeling.

Almosova & Andresen (2019) employed long short-term memory (LSTM) for inflation forecasting. They compared their approach to multiple baselines such as autoregressive models, random walk models, seasonal autoregressive models, Markov switching models, and fully connected neural networks. At all time horizons, the root mean squared forecast of their LSTM model was approximately one-third of the random walk model and significantly more accurate than the other baselines.

As we explain in Section 3.3, our model uses gated recurrent networks (GRUs), which are similar to LSTMs. Unlike Almosova & Andresen (2019) and Zahara et al. (2020), a key contribution of our model stems from its ability to propagate useful information from higher levels in the hierarchy down to the nodes at lower levels. By ignoring the hierarchical relations between the different CPI components, our model is reduced to a set of simple, unrelated GRUs. This setup is similar to Almosova & Andresen (2019), as the difference between LSTMs and GRUs is negligible. In Section 6, we perform an ablation study in which the HRNN ignores the hierarchical relations and is reduced to a collection of independent GRUs, similar to the model in Almosova & Andresen (2019). Our evaluations indicate that this approach is not optimal at any level of the CPI hierarchy.

3. Recurrent neural networks

Before describing the HRNN model in detail, we briefly overview the main RNN approaches. RNNs are neural networks that model sequences of data in which each value is assumed to be dependent on previous values. Specifically, RNNs are feed-forward networks augmented by implementing a feedback loop (Mandic & Chambers, 2001). As such, RNNs introduce a notion of time to the standard feed-forward neural networks and excel at modeling temporal dynamic behavior (Chung et al., 2014). Some RNN units retain an internal memory state from previous time steps representing an arbitrarily long context window. Many RNN implementations were proposed and studied in the past. A comprehensive review and comparison of the different RNN architectures is available in Chung et al. (2014) and Lipton et al. (2015). In this section, we cover the three most popular units: basic RNNs, long short-term memory (LSTM), and gated recurrent units (GRUs).

3.1. Basic recurrent neural networks

Let $\{x_t\}_{t=1}^{T}$ be the model's input time series consisting of T samples. Similarly, let $\{s_t\}_{t=1}^{T}$ be the model's results consisting of T samples from the target time series. The model's input at t is x_t, and its output (prediction) is s_t. The following set of equations defines a basic RNN unit:

$$s_t = \tanh(x_t u + s_{t-1} w + b), \tag{1}$$

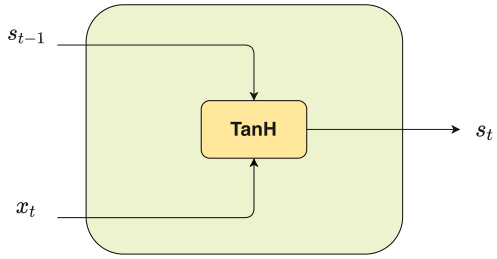

Fig. 1. Illustration of a basic RNN unit.
Each line carries an entire vector, from the output of one node to the inputs of others. The yellow box is a learned neural network layer.

where u, w, and b are the model's parameters, and $\tanh(x) = \frac{e^x - e^{-x}}{e^x + e^{-x}}$ is the hyperbolic tangent function. The model's output from the previous period s_{t-1} is used as an additional input to the model at time t, along with the current input x_t. The linear combination $x_t u + s_{t-1} w + b$ is the argument of a hyperbolic tangent *activation* function allowing the unit to model nonlinear relations between inputs and outputs. Different implementations may employ other activation functions, e.g., the sigmoid function, some logistic functions, or a rectified linear unit (ReLU) function (Ramachandran et al., 2017). Fig. 1 depicts a basic RNN unit.

3.2. Long short-term memory networks

Basic RNNs suffer from the "short-term memory" problem: they utilize data from recent history to forecast, but if a sequence is long enough, it cannot carry relevant information from earlier periods to later ones, e.g., relevant patterns from the same month in previous years. Long short-term memory networks (LSTMs) mitigate the "short-term memory" problem by introducing gates that enable the preservation of relevant "long-term memory" and combining it with the most recent data (Hochreiter & Schmidhuber, 1997). The introduction of LSTMs paved the way for significant strides forward in various fields, such as natural language processing, speech recognition, and robot control (Yu et al., 2019).

An LSTM unit has the ability to "memorize" or "forget" information through the use of a special memory *cell state*, carefully regulated by three gates: an input gate, a forget gate, and an output gate. The gates regulate the flow of information into and out of the memory cell state. An LSTM unit is defined by the following set of equations:

$$\begin{aligned} i &= \sigma(x_t u^i + s_{t-1} w^i + b^i), \\ f &= \sigma(x_t u^f + s_{t-1} w^f + b^f), \\ o &= \sigma(x_t u^o + s_{t-1} w^o + b^o), \\ \tilde{c} &= \tanh(x_t u^c + s_{t-1} w^c + b^c), \\ c_t &= f \times c_{t-1} + i \times \tilde{c}, \\ s_t &= o \times \tanh(c_t), \end{aligned} \tag{2}$$

where $\sigma(x) = \frac{1}{1+e^{-x}}$ is the sigmoid or logistic activation function; u^i, w^i, and b^i are the learned parameters that control the input gate i; u^f, w^f, and b^f are the learned parameters that control the forget gate f; u^o, w^o, and b^o are the learned parameters that control the output gate o; and $\tilde{c}$ is the new candidate activation for the cell state determined by the parameters u^c, w^c, and b^c. The *cell state* c_t is itself updated by the linear combination $c_t = f \times c_{t-1} + i \times \tilde{c}$, where c_{t-1} is its previous value of the cell state. The input gate i determines which parts of the candidate $\tilde{c}$ should be used to modify the memory cell state, and the forget gate f determines which parts of the previous memory c_{t-1} should be discarded. Finally, the recently updated *cell state* c_t is "squashed" through a nonlinear hyperbolic tangent, and the output gate o determines which parts of it should be presented in the output s_t. Fig. 2 depicts an LSTM unit.

3.3. Gated recurrent units

A gated recurrent unit (GRU) improves the LSTM unit by dropping the *cell state* in favor of a more simplified unit that requires fewer learnable parameters (Dey & Salemt, 2017). GRUs employ only two gates instead of three: an update gate and a reset gate. Using fewer parameters, GRUs are faster and more efficient, especially when training data are limited, such as in the case of inflation predictions and particularly disaggregated inflation components.

The following set of equations defines a GRU unit:

$$\begin{aligned} z &= \sigma(x_t u^z + s_{t-1} w^z + b^z), \\ r &= \sigma(x_t u^r + s_{t-1} w^r + b^r), \\ v &= \tanh(x_t u^v + (s_{t-1} \times r) w^v + b^v), \\ s_t &= z \times v + (1 - z) s_{t-1}, \end{aligned} \tag{3}$$

where u^z, w^z, and b^z are the learned parameters that control the *update gate* z, and u^r, w^r, and b^r are the learned parameters that control the reset gate r. The candidate activation v is a function of the input x_t and the previous output s_{t-1}, and is controlled by the learned parameters: u^v, w^v, and b^v. Finally, the output s_t combines the candidate activation v, and the previous state s_{t-1} controlled by the update gate z. Fig. 3 depicts a GRU unit.

GRUs enable the "memorization" of relevant information patterns with significantly fewer parameters compared to LSTMs (see Fig. 2). Hence, GRUs constitute the basic unit for our novel HRNN model described in Section 4.

4. Hierarchical recurrent neural networks

The disaggregated components at lower levels of the CPI hierarchy (e.g., newspapers, medical care, etc.) suffer from missing data as well as higher volatility in change rates. The HRNN exhibits a network graph in which each node is associated with an RNN unit that models the inflation rate of a specific (sub-) index (node) in the full CPI hierarchy. The HRNN's unique architecture allows it to propagate information from RNN nodes in higher levels to lower levels in the CPI hierarchy, coarse to fine grained, via a chain of hierarchical informative priors over the RNNs' parameters. This unique property of the HRNN is materialized in better predictions for nodes at lower levels of the hierarchy, as we show in Section 6,

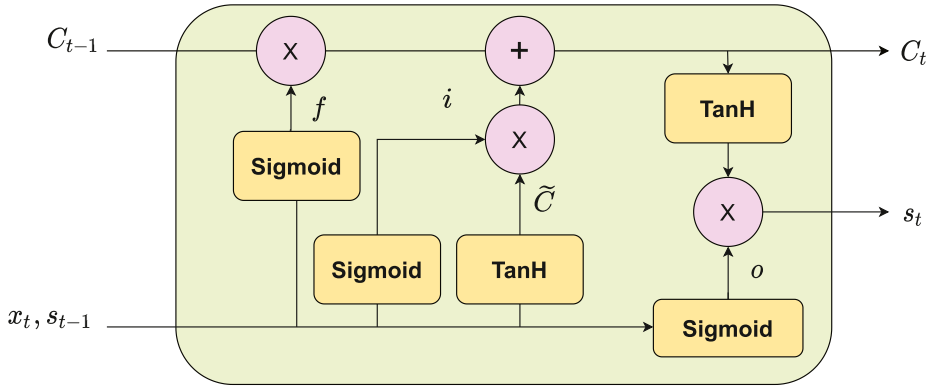

Fig. 2. Illustration of an LSTM unit.
Each line carries an entire vector, from the output of one node to the inputs of others. The pink circles represent point-wise operations, while the yellow boxes are learned neural network layers. Lines merging denote concatenation, while a line forking denotes its content being copied and the copies going to different locations.

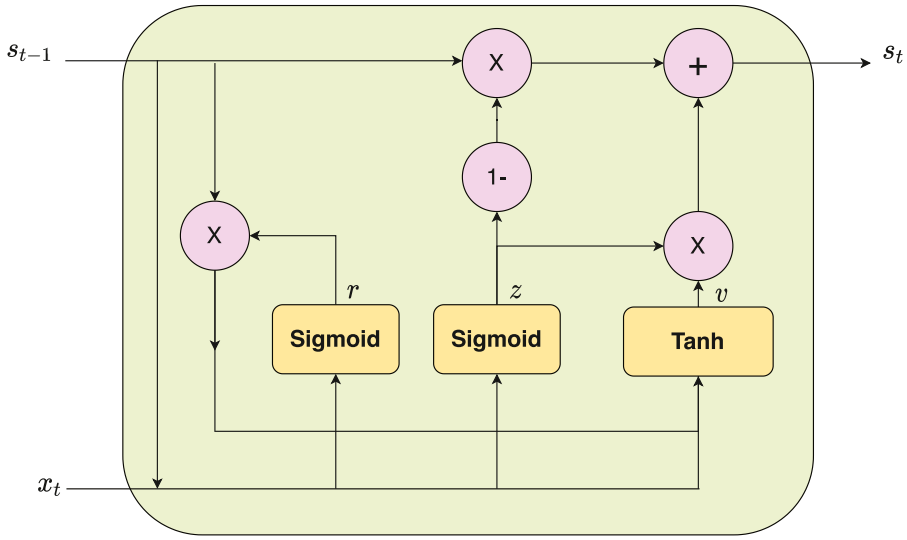

Fig. 3. Illustration of a GRU unit.
Each line carries an entire vector, from the output of one node to the inputs of others. The pink circles represent point-wise operations, while the yellow boxes are learned neural network layers. Lines merging denote concatenation, while a line forking denotes its content being copied and the copies going to different locations.

4.1. Model formulation

Let $\mathcal{I} = \{n\}_{n=1}^{N}$ be an enumeration of the nodes in the CPI hierarchy graph. In addition, we define $\pi_n \in \mathcal{I}$ as the parent node of the node n. For example, if the nodes $n = 5$ and $n = 19$ represent the indexes of Tomatoes and Vegetables, respectively, then $\pi_5 = 19$ (i.e., the parent node of Tomatoes is Vegetables).

For each node $n \in \mathcal{I}$, we denote by $x_t^n \in \mathbb{R}$ the observed random variable that represents the CPI value of the node n at timestamp $t \in \mathbb{N}$. We further denote $X_t^n \triangleq (x_1^n, \ldots, x_t^n)$, where $1 \leq t \leq T_n$, and T_n is the last timestamp for node n. Let $g : \mathbb{R}^m \times \Omega \to \mathbb{R}$ be a parametric function representing an RNN node in the hierarchy. Specifically, $\mathbb{R}^m$ is the space of parameters that control the RNN unit, Ω is the input time series space, and the function g predicts a scalar value for the next value of the input series. Hence, our goal is to learn the parameters $\theta_n \in \mathbb{R}^m$ such that for $X_t^n \in \Omega$, $g(\theta_n, X_t^n) = x_{t+1}^n$, $\forall n \in \mathcal{I}$, and $1 \leq t < T_n$.

We proceed by assuming a Gaussian error on g's predictions and receive the following expression for the likelihood of the observed time series:

$$p(X_{T_n}^n|\theta_n, \tau_n) = \prod_{t=1}^{T_n} p(x_t^n|X_{t-1}^n, \theta_n, \tau_n)$$
$$= \prod_{t=1}^{T_n} \mathcal{N}(x_t^n; g(\theta_n, X_{t-1}^n), \tau_n^{-1}), \quad (4)$$

where $\tau_n^{-1} \in \mathbb{R}$ is the variance of g's errors.

Next, we define a hierarchical network of normal priors over the nodes' parameters that attach each node's parameters with those of its parent node. The hierarchical

priors follow

$$p(\theta_n|\theta_{\pi_n}, \tau_{\theta_n}) = \mathcal{N}(\theta_n; \theta_{\pi_n}, \tau_{\theta_n}^{-1}\mathbf{I}), \tag{5}$$

where τ_{θ_n} is a configurable precision parameter that determines the "strength" of the relation between node n's parameters and the parameters of its parent π_n. Higher values of τ_{θ_n} strengthen the attachment between θ_n and its prior θ_{π_n}.

The precision parameter τ_{θ_n} can be seen as a global hyperparameter of the model to be optimized via cross-validation. However, different nodes in the CPI hierarchy have varying degrees of correlation with their parent nodes. Hence, the value of τ_{θ_n} in HRNN is given by

$$\tau_{\theta_n} = e^{\alpha + C_n}, \tag{6}$$

where α is a hyperparameter, and $C_n = \rho(X_{T_n}^n, X_{T_{\pi_n}}^{\pi_n})$ is the Pearson correlation coefficient between the time series of n and its parent π_n.

Importantly, Eq. (5) describes a novel prior relationship between the parameters of a node and its parent in the hierarchy that grows increasingly stronger according to the historical correlation between the two series. This ensures that a child node n is kept close to its parent node π_n in terms of the squared Euclidean distance in the parameter space, especially if they are highly correlated. Note that in the case of the root node (the headline CPI), π_n does not exist and hence we set a normal non-informative regularization prior with zero mean and unit variance.

Let us now denote the aggregation of all series from all levels by $X = \{X_{T_n}^n\}_{n\in\mathcal{I}}$. Similarly, we denote by $\theta = \{\theta_n\}_{n\in\mathcal{I}}$ and $\mathrm{T} = \{\tau_n\}_{n\in\mathcal{I}}$ the aggregation of all the RNN parameters and precision parameters from all levels, respectively. Note that X (the data) is observed, θ denotes unobserved learned variables, and T is determined by Eq. (6). The hyperparameter α from Eq. (6) is set by a cross-validation procedure.

With these definitions at hand, we now proceed with the Bayes rule. From Eq. (4) and Eq. (5), we extract the posterior probability:

$$\begin{aligned} p(\theta|X, \mathrm{T}) = & \frac{p(X|\theta, \mathrm{T})p(\theta)}{P(X)} \propto \\ & \prod_{n\in\mathcal{I}} \prod_{t=1}^{T_n} \mathcal{N}(x_t^n; g(\theta_n, X_{t-1}^n), \tau_n^{-1}) \\ & \prod_{n\in\mathcal{I}} \mathcal{N}(\theta_n; \theta_{\pi_n}, \tau_{\theta_n}^{-1}\mathbf{I}). \end{aligned} \tag{7}$$

HRNN optimization follows a maximum a posteriori (MAP) approach. Namely, we wish to find optimal parameter values θ^*, such that

$$\theta^* = \underset{\theta}{\operatorname{argmax}} \log p(\theta|X, \mathrm{T}). \tag{8}$$

Note that the objective in Eq. (8) depends on the parametric function g. The HRNN is a general framework that can use any RNN, e.g., a simple RNN, LSTM, GRU, etc. In this work, we chose g to be a scalar GRU because GRUs are capable of long-term memory but with fewer parameters than LSTMs. Hence, each node n is associated with a GRU with its own parameters: $\theta_n = [u_n^z, u_n^r, u_n^v, w_n^z, w_n^r, w_n^v, b_n^z, b_n^r, b_n^v]$. Then, $g(\theta_n, X_t^n)$ is computed by t successive applications of the GRU to x_i^n with $1 \le i \le t$ according to Eq. (3). Finally, the HRNN optimization proceeds with stochastic gradient ascent over the objective in Eq. (8). Fig. 4 depicts the entire HRNN architecture.

4.2. HRNN inference

In machine learning, after the model's parameters have been estimated in the training process, the model can be applied to make predictions in a process known as inference. In our case, equipped with the MAP estimate θ^*, inference with the HRNN model is achieved as follows: Given a sequence of historical CPI values X_t^n for node n, we predict the next CPI value $y_{t+1}^n = g(\theta_n, X_t^n)$, as explained in . This type of prediction is for next month's CPI, namely, horizon $h = 0$. In this work, we also tested the ability of the model to perform predictions for further horizons $h \in \{0, \ldots, 8\}$. The h-horizon predictions are obtained in a recursive manner, whereby each predicted value y_t^n is fed back as an input for the prediction of y_{t+1}^n. As expected, Section 6 shows that the forecasting accuracy gradually degrades as horizon h increases.

5. Dataset

This work is based on monthly CPI data released by the US Bureau of Labor and Statistics (BLS). In what follows, we discuss the dataset's characteristics and our pre-processing procedures. For the sake of reproducibility, the final version of the processed data is available in our HRNN code.

5.1. The US consumer price index

The official CPI of each month is released by the BLS several days into the following month. The price tags are collected in 75 urban areas throughout the US from about 24,000 retail and service establishments. The housing and rent rates are collected from about 50,000 landlords and tenants across the country. The BLS releases two different measurements according to urban demographics:

1. The **CPI-U** represents the CPI for urban consumers and covers approximately 93% of the total population. According to the Consumer Expenditure Survey, the CPI items and their relative weights are derived from their estimated expenditure. These items and their weights are updated each year in January.
2. The **CPI-W** represents the CPI for urban wage earners and clerical workers and covers about 29% of the population. This index is focused on households with at least 50% of income coming from clerical or wage-paying jobs, and at least one of the household's earners must have been employed for at least 70% of the year. The CPI-W indicates changes in the cost of benefits, as well as future contract obligations.

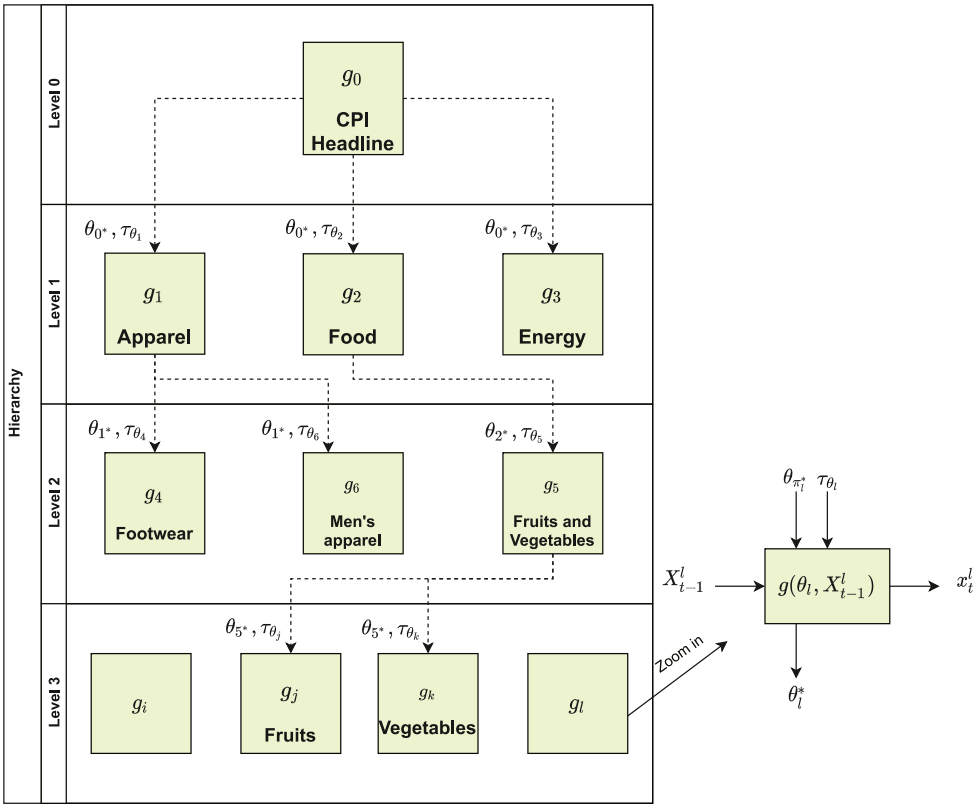

Fig. 4. Illustration of the full HRNN model.

In this work, we focus on CPI-U, as it is generally considered the best measure for the average cost of living in the US. Monthly CPI-U data per product are generally available from January 1994. Our samples thus span from January 1994 to March 2019. Note that throughout the years, new indexes were added, and some indexes have been omitted. Consequently, hierarchies can change, which contributes to the challenge of our exercise.

5.2. The CPI hierarchy

The CPI-U is an eight-level-deep hierarchy comprising 424 different nodes (indexes). Level 0 represents the headline CPI, or the aggregated index of all components. An index at any level is associated with a weight between 0 and 100, which represents its contribution to the headline CPI at level 0. Level 1 consists of the eight main aggregated categories or sectors: (1) Food and Beverages, (2) Housing, (3) Apparel, (4) Transportation, (5) Medical Care, (6) Recreation, (7) Education and Communication, and (8) Other Goods and Services. Mid-levels (2–5) consist of more specific aggregations, e.g., Energy Commodities, Household Insurance, etc. The lower levels (6–8) consist of fine-grained indexes, e.g., Apples, Bacon and Related Products, Eyeglasses and Eye Care, Tires, Airline Fares, etc.

Tables 7 and 8 (in Appendix) depict the first three hierarchies of the CPI (levels 0–2).

5.3. Data preparation

We used publicly available data from the BLS website.[2] However, the BLS releases hierarchical data on a monthly basis in separate files. Hence, separate monthly files from January 1994 until March 2019 were processed and aggregated to create a single repository. Moreover, the format of these files has changed over the years (e.g., txt, pdf, and csv formats were all in use) and significant effort was made to parse the changing formats from different time periods.

The hierarchical CPI data is released in terms of monthly index values. We transformed the CPI values to monthly logarithmic change rates as follows: We denote by x_t the CPI value (of any node) at month t. The logarithmic change rate at month t is denoted by $rate(t)$ and given by

$$rate(t) = 100 \times \log\left(\frac{x_t}{x_{t-1}}\right). \tag{9}$$

Unless otherwise mentioned, the remainder of the paper relates to monthly logarithmic change rates, as in Eq. (9).

We split the data into a training dataset and a test dataset as follows: For each time series, we kept the first (early in time) 70% of the measurements for the training dataset. The remaining 30% of the measurements were

[2] www.bls.gov/cpi.

Table 1
Descriptive statistics.

Dataset	# of monthly measurements	Mean	STD	Min	Max	# of indexes	Avg. measurements per index
Headline only	303	0.18	0.33	−1.93	1.22	1	303
Level 1	6742	0.17	0.96	−18.61	11.32	34	198.29
Level 2	6879	0.12	1.10	−19.60	16.81	46	149.54
Level 3	7885	0.17	1.31	−34.23	16.37	51	121.31
Level 4	7403	0.08	1.97	−35.00	28.17	58	107.89
Level 5	10,809	0.01	1.43	−21.04	242.50	92	87.90
Level 6	7752	0.09	1.49	−11.71	16.52	85	86.13
Level 7	4037	0.11	1.53	−11.90	9.45	50	80.74
Level 8	595	0.08	1.56	−5.27	5.02	7	85.00
Full hierarchy	52,405	0.10	1.75	−35.00	242.50	424	123.31

Notes: General statistics of the headline CPI and CPI-U for each level in the hierarchy and the full hierarchy of indexes.

removed from the training dataset and used to form the test dataset. The training dataset was used to train the HRNN model as well as the other baselines. The test dataset was used for evaluations. The results in Section 6 are based on this split.

Table 1 summarizes the number of data points and general statistics of the CPI time series after applying Eq. (9). When comparing the headline CPI with the full hierarchy, we see that at lower levels, the standard deviation (STD) is significantly higher and the dynamic range is larger, implying much more volatility. The average number of measurements per index decreases at the lower levels of the hierarchy, as not all indexes are available for the entire period.

Fig. 5 depicts box plots of the CPI change rate distributions at different levels. The boxes depict the median value and the upper 75th and lower 25th percentiles. The whiskers indicate the overall minimum and maximum rates. Fig. 5 further emphasizes that the change rates are more volatile as we go down the CPI hierarchy.

High dynamic range, high standard deviation, and less training data are all indicators of the difficulty of making predictions inside the hierarchy. Based on this information, we can expect that the disaggregated component predictions inside the hierarchy will be more difficult than the headline.

Finally, Fig. 6 depicts a box plot of the CPI change rate distribution for different sectors. We notice that some sectors (e.g., apparel and energy) suffer from higher volatility than others. As expected, predictions for these sectors will be more difficult.

6. Evaluation and results

We evaluated the HRNN and compared it with well-known baselines for inflation prediction as well as some alternative machine learning approaches. We use the following notation: Let x_t be the CPI log-change rate at month t. We consider models for $\hat{x}_t$—an estimate for x_t based on historical values. Additionally, we denote by ε_t the estimation error at time t. In all cases, the h-horizon forecasts were generated by recursively iterating the one-step forecasts forward. Hyperparameters were set through a ten-fold cross-validation procedure.

6.1. Baseline models

We compared the HRNN with the following CPI prediction baselines:

1. **Autoregression (AR) –** The AR(ρ) estimates $\hat{x}_t$ based on the previous ρ months as follows: $\hat{x}_t = \alpha_0 + \left(\sum_{i=1}^{\rho} \alpha_i x_{t-i}\right) + \varepsilon_t$, where $\{\alpha_i\}_{i=0}^{\rho}$ denotes the model's parameters.
2. **Phillips curve (PC) –** A PC(ρ) is an extension of AR(ρ) that considers the unemployment rate u_t at month t in the CPI forecasting model as follows: $\hat{x}_t = \alpha_0 + \left(\sum_{i=1}^{\rho} \alpha_i x_{t-i}\right) + \beta u_{t-1} + \varepsilon_t$, where $\{\alpha_i\}_{i=0}^{\rho}$ and β are the model's parameters.
3. **Vector autoregression (VAR) –** The VAR(ρ) model is a multivariate generalization of AR(ρ). It is frequently used to model two or more time series together. VAR(ρ) estimates next month's values of k time series based on their historical values from the previous ρ months as follows: $\hat{X}_t = A_0 + (\sum_{i=1}^{\rho} A_i X_{t-i}) + \epsilon_t$, where X_t denotes the last ρ values from k different time series at month t, and $\hat{X}_t$ denotes the model's estimates of these values; $\{A_i\}_{i=0}^{\rho}$ denotes $(k \times k)$ matrices of parameters, and ϵ_t is a vector of error terms.
4. **Random walk (RW) –** We consider the RW(ρ) model of Atkeson & Ohanian (2001). RW(ρ) is a simple yet effective model that predicts next month's CPI as an average of the last ρ months: $\hat{y}_t = \frac{1}{\rho} \sum_{i=1}^{\rho} x_{t-i} + \varepsilon_t$.
5. **Autoregression in gap (AR-GAP) –** The AR-GAP model subtracts a fixed inflation trend before predicting the inflation in gap (Faust & Wright, 2013). Inflation gap is defined as $g_t = x_t - \tau_t$, where τ_t is the inflation trend at time t, which represents a slowly varying local mean. This trend value is estimated using RW(ρ) as follows: $\tau_t = \frac{1}{\rho} \sum_{i=1}^{\rho} x_{t-i}$. By accounting for the local inflation trend τ_t, the model attempts to increase stationarity in g_t and estimate it by $\hat{g}_t = \alpha_0 + \sum_{i=1}^{\rho} \alpha_i g_{t-i} + \varepsilon_t$, where $\{\alpha_i\}_{i=0}^{\rho}$ denotes the model's parameters. Finally, τ_t is added back to $\hat{g}_t$ to achieve the forecast for the final inflation prediction: $\hat{x}_t = \hat{g}_t + \tau_t$.
6. **Logistic smooth transition autoregressive model (LSTAR) –** The LSTAR model is an extension of

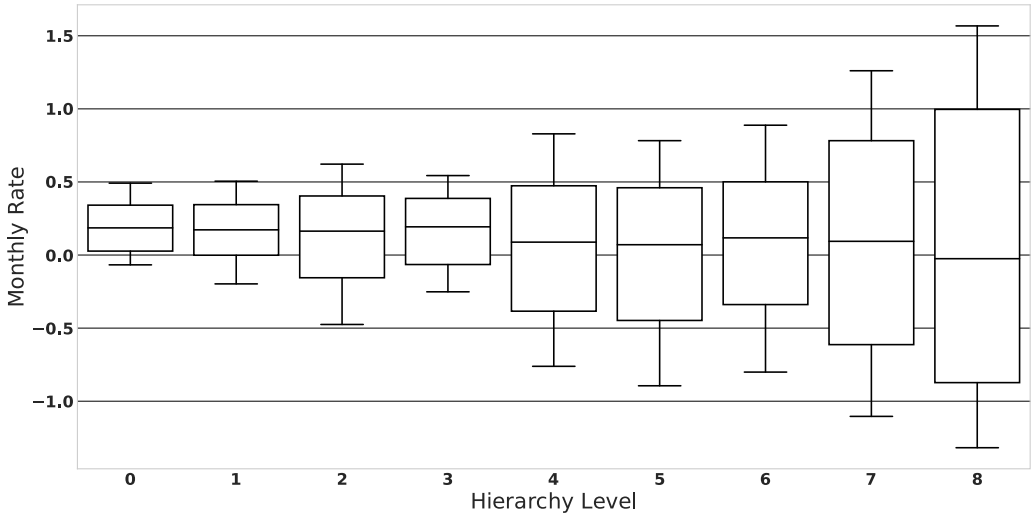

Fig. 5. Box plots of monthly inflation rate per hierarchy level.

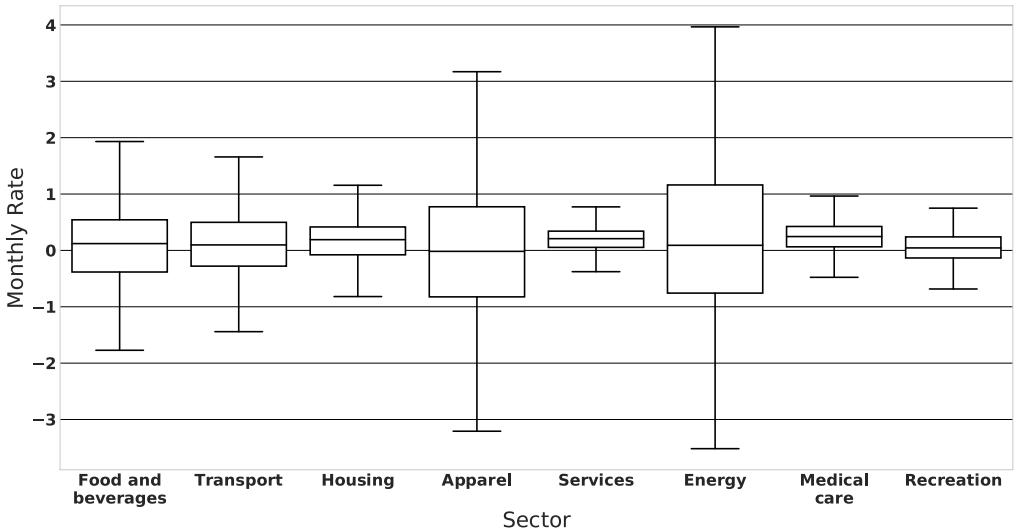

Fig. 6. Box plots of monthly inflation rate per sector.

AR that allows for changes in the model parameters according to a transition variable $F(t; c, \gamma)$. LSTAR(ρ, c, γ) consists of two AR(ρ) components that describe two trends in the data (high and low) and a nonlinear transition function that links them as follows:

$$\hat{x}_t = \left(\alpha_0 + \sum_{i=1}^{\rho} \alpha_i x_{t-i}\right)(1 - F(t; \gamma, c)) + \left(\beta_0 + \sum_{i=1}^{\rho} \beta_i x_{t-i}\right) F(t; \gamma, c) + \varepsilon_t, \quad (10)$$

where $F(t; \gamma, c) = \frac{1}{1+e^{-\gamma(t-c)}}$ is a first-order logistic transition function that depends on the location parameter c and a smoothing parameter γ. The location parameter c can be interpreted as the threshold between the two AR(ρ) regimes, in the sense that the logistic function changes monotonically from 0 to 1 as t increases and balances symmetrically at $t = c$ (van Dijk et al., 2002). The model's parameters are $\{\alpha_i\}_{i=0}^{\rho}$ and $\{\beta_i\}_{i=0}^{\rho}$, while γ, and c are hyperparameters.

7. **Random forests (RF) –** The RF(ρ) model is an ensemble learning method which builds a set of decision trees (Song & Ying, 2015) in order to mitigate overfitting and improve generalization (Breiman, 2001). At prediction time, the average prediction of the individual trees is returned. The inputs to the RF(ρ) model are the last ρ samples, and the output is the predicted value for the next month.
8. **Gradient boosted trees (GBT) –** The GBT(ρ) model (Friedman, 2002) is based on an ensemble of decision trees which are trained in a stage-wise fashion similar to other boosting models Schapire (1999).

Unlike RF(ρ), which averages the prediction of several decision trees, the GBT(ρ) model trains each tree to minimize the remaining residual error of all previous trees. At prediction time, the sum of predictions of all the trees is returned. The inputs to the GBT(ρ) model are the last ρ samples, and the output is the predicted value for the next month.

9. **Fully connected neural network (FC) –** The FC(ρ) model is a fully connected neural network with one hidden layer and a ReLU activation (Ramachandran et al., 2017). The output layer employs no activation to formulate a regression problem with a squared loss optimization. The inputs to the FC(ρ) model are the last ρ samples, and the output is the predicted value for the next month.
10. **Deep neural network (Deep-NN) –** The Deep-NN(ρ) model is a deep neural network consisting of ten layers with 100 neurons, as in Olson et al. (2018), which was shown to perform well for inflation prediction (Goulet Coulombe, 2020). We used the original setup of Olson et al. (2018) and tuned its hyperparameters as follows: the learning rate was set to $lr = 0.005$, training lasted 50 epochs (instead of 200), and the ELU activation functions (Clevert et al., 2016) were replaced by ReLU activation functions. These changes yielded more accurate predictions. Hence we decided to include them in all our evaluations. The inputs to the Deep-NN(ρ) model are the last ρ samples, and the output is the predicted value for the next month.
11. **Deep neural network with unemployment (Deep-NN + Unemployment) –** Similar to PC(ρ), which extends AR(ρ) by including unemployment data, the Deep-NN(ρ) + Unemployment model extends Deep-NN(ρ) by including the last ρ samples of the unemployment rate u_t. In terms of hyperparameters, we used identical values as in the Deep-NN(ρ).

6.2. Ablation models

In order to demonstrate the contribution of the hierarchical component of the HRNN model, we conducted an ablation study that considered simpler alternatives to the HRNN based on GRUs without the hierarchical component:

1. **Single GRU (S-GRU) –** The S-GRU(ρ) is a single GRU that receives the last ρ values as inputs in order to predict the next value. In GRU(ρ), a single GRU is used for all the time series that comprise the CPI hierarchy. This baseline utilizes all the benefits of a GRU but assumes that the different components of the CPI behave similarly and that a single unit is sufficient to model all the nodes.
2. **Independent GRUs (I-GRUs) –** In I-GRUs(ρ), we trained a different GRU(ρ) unit for each CPI node. The S-GRU and I-GRU approaches represent two extremes: The first attempts to model all the CPI nodes with a single model, while the second treats each node separately. I-GRUs(ρ) is equivalent to a variant of the HRNN that ignores the hierarchy by setting the precision parameter $\tau_{\theta_n} = 0;\ \forall n \in \mathcal{I}$. That is, this is a simple variant of the HRNN that trains independent GRUs, one for each index in the hierarchy.
3. **k-nearest neighbors GRU (KNN-GRU) –** In order to demonstrate the contribution of the hierarchical structure of HRNN, we devised the KNN-GRU(ρ) baseline. KNN-GRU attempts to utilize information from multiple Pearson-correlated CPI nodes without employing the hierarchical informative priors. Hence, KNN-GRU presents a simpler alternative to the HRNN that replaces the hierarchical structure with elementary vector GRUs as follows: First, the k nearest neighbors of each CPI node were found using the Pearson correlation measure. Then, separate vector GRU(ρ) units were trained for each CPI aggregate along its k most similar nodes using the last ρ values of node n and its k-nearest nodes. By doing so, the KNN-GRU(ρ) baseline was able to utilize the benefits of GRU units together with relevant information that comes from correlated nodes.

6.3. Evaluation metrics

Following Aparicio & Bertolotto (2020) and Faust & Wright (2013), we report results in terms of three evaluation metrics:

1. **Root mean squared error (RMSE) –** The RMSE is given by
$$RMSE = \sqrt{\frac{1}{T}\sum_{t=1}^{T}\left(x_t - \hat{x}_t\right)^2}, \tag{11}$$
where x_t is the monthly change rate for month t, and $\hat{x}_t$ is the corresponding prediction.
2. **Pearson correlation coefficient –** The Pearson correlation coefficient ϕ is given by
$$\phi = \frac{COV(X_T, \hat{X}_T)}{\sigma_X \times \sigma_{\hat{X}}}, \tag{12}$$
where $COV(X_T, \hat{X}_T)$ is the covariance between the series of actual values and the predictions, and σ_{X_T} and $\sigma_{\hat{X}_T}$ are the standard deviations of the actual values and the predictions, respectively.
3. **Distance correlation coefficient –** In contrast to the Pearson correlation measure, which detects linear associations between two random variables, the distance correlation measure can also detect nonlinear correlations (Székely et al., 2007; Zhou, 2012). The distance correlation coefficient r_d is given by
$$r_d = \frac{\mathrm{dCov}(X_T, \hat{X}_T)}{\sqrt{\mathrm{dVar}(X_T) \times \mathrm{dVar}(\hat{X}_T)}}, \tag{13}$$
where $\mathrm{dCov}(X_T, \hat{X}_T)$ is the distance covariance between the series of actual values and the predictions, and $\mathrm{dVar}(X_T)$ and $\mathrm{dVar}(\hat{X}_T)$ are the distance variance of the actual values and the predictions, respectively.

Table 2
Average results on disaggregated CPI components.

Model name	RMSE per horizon AR(1) = 1.00						Correlation (at horizon = 0)	
	0	1	2	3	4	8	Pearson	Distance
AR(1)	1.00	1.00	1.00	1.00	1.00	1.00	0.06	0.05
AR(2)	1.00	1.00	1.00	1.00	1.00	1.00	0.08	0.06
AR(3)	1.00	1.00	1.00	1.00	1.00	1.00	0.08	0.06
AR(4)	1.00	1.00	1.00	1.00	1.00	1.00	0.09	0.07
AR-GAP(3)	1.00	1.00	1.00	1.00	1.00	1.00	0.08	0.06
AR-GAP(4)	1.00	1.00	1.00	1.00	1.00	1.00	0.09	0.07
RW(4)	1.00	1.00	1.00	1.00	1.00	1.00	0.05	0.04
Phillips(4)	1.00	1.00	1.00	1.00	0.98	1.00	0.06	0.04
VAR(1)	1.03	1.03	1.04	1.03	1.04	1.05	0.04	0.03
VAR(2)	1.03	1.03	1.04	1.03	1.04	1.05	0.06	0.03
VAR(3)	1.03	1.03	1.03	1.03	1.04	1.05	0.06	0.03
VAR(4)	1.02	1.03	1.03	1.03	1.03	1.04	0.07	0.04
LSTAR($\rho = 4$, $c = 2$, $\gamma = 0.3$)	1.04	1.07	1.07	1.07	1.08	1.1	0.09	0.07
GBT(4)	0.83	0.83	0.83	0.84	0.84	0.86	0.18	0.27
RF(4)	0.84	0.85	0.86	0.86	0.86	0.87	0.19	0.29
FC(4)	1.03	1.03	1.04	1.04	1.04	1.05	0.12	0.09
Deep-NN(4)	0.90	0.90	0.90	0.90	0.91	0.91	0.13	0.22
Deep-NN(4) + Unemployment	0.85	0.85	0.85	0.85	0.85	0.86	0.12	0.22
S-GRU(4)	1.02	1.06	1.06	1.07	1.04	1.12	0.10	0.08
I-GRU(4)	0.83	0.84	0.85	0.85	0.86	0.89	0.17	0.13
KNN-GRU(1)	0.91	0.93	0.96	0.97	0.96	0.96	0.19	0.15
KNN-GRU(2)	0.90	0.93	0.95	0.97	0.96	0.96	0.20	0.15
KNN-GRU(3)	0.89	0.92	0.95	0.96	0.96	0.95	0.20	0.15
KNN-GRU(4)	0.89	0.91	0.95	0.95	0.95	0.95	0.20	0.15
HRNN(1)	0.79	0.79	0.81	0.81	0.81	0.83	0.23	0.28
HRNN(2)	**0.78**	0.79	0.81	0.81	0.80	0.82	0.22	0.29
HRNN(3)	0.79	**0.78**	0.80	0.81	0.81	0.81	0.23	**0.30**
HRNN(4)	**0.78**	**0.78**	**0.79**	**0.79**	**0.79**	**0.80**	**0.24**	0.29

Notes: Average results across all 424 inflation indexes that make up the headline CPI. The RMSE results are relative to the $AR(1)$ model and normalized according to its results, i.e., $\frac{RMSE_{Model}}{RMSE_{AR(1)}}$. The results are statistically significant according to a Diebold–Mariano test with $p < 0.02$.

6.4. Results

The HRNN model is unique in its ability to utilize information from higher levels in the CPI hierarchy in order to make predictions at lower levels. Therefore, we provide results for each level of the CPI hierarchy—overall, 424 disaggregated indexes belonging to eight different hierarchies. For the sake of completion, we also provide results for the headline CPI index by itself. It is important to note that in this case, the HRNN model cannot utilize its hierarchical mechanism and has no advantage over the alternatives, so we do not expect it to outperform.

Table 2 shows the average results from all the disaggregated indexes in the CPI hierarchy. We present prediction results for horizons 0, 1, 2, 3, 4, and 8 months. The results are relative to the $AR(1)$ model and normalized according to $\frac{RMSE_{Model}}{RMSE_{AR(1)}}$. In the HRNN, we set $\alpha = 1.5$, and the V-GRU(ρ) models were based on $k = 5$ nearest neighbors.

Table 2 shows that different versions of the HRNN model repeatedly outperform the alternatives at any horizon. Notably, the HRNN is superior to I-GRU, emphasizing the importance of using hierarchical information and the superiority of the HRNN over regular GRUs. Additionally, the HRNN is superior to the different KNN-GRU models, emphasizing the specific way the HRNN employs informative priors based on the CPI hierarchy. These results are statistically significant according to Diebold & Mariano (1995) pairwise tests for a squared loss-differential with p-values below 0.02. Additionally, we performed a model confidence set (MCS) test (Hansen et al., 2011) for the leading models: RF(4), Deep-NN(4), Deep-NN(4) + Unemployment, GBT(4), IGRU(4), HRNN(1), HRNN(2), HRNN(3), and HRNN(4). The MCS removed all the baselines and left only the four HRNN variants, with HRNN(4) as the leading model ($p_{HRNN(4)} = 1.00$).

For the sake of completion, we also provide results for predictions at the head of the CPI index. Table 3 summarizes these results. When considering only the headline, the hierarchical mechanism of the HRNN is redundant and the model is identical to a single GRU. In this case, we do not observe much advantage for employing the HRNN model. In contrast, we see an advantage for the other deep learning models, such as FC(4) and Deep-NN(4) + Unemployment, which outperform the more traditional approaches.

Table 4 lists the results of the best model, HRNN(4), across all hierarchies (1–8, excluding the headline). We include the results of the best ablation model, the I-GRU(4) model, for comparison. The results are averaged over all disaggregated components and normalized by the AR(1) model RMSE, as before. As evident from Table 4, the HRNN model shows the best relative performance at the lower levels of the hierarchy where the CPI indexes are more volatile and the hierarchical priors are most effective.

Table 5 compares the results of HRNN(4) across different sectors. Again, we include the results of the I-GRU(4)

Table 3
CPI headline only.

Model name*	RMSE per horizon AR(1) = 1.00						Correlation (at horizon = 0)	
	0	1	2	3	4	8	Pearson	Distance
AR(1)	1.00	1.00	1.00	1.00	1.00	1.00	0.29	0.22
AR(2)	1.00	0.97	0.99	1.01	1.00	0.98	0.32	0.24
AR(3)	1.00	0.98	0.98	1.00	0.96	0.97	0.33	0.25
AR(4)	1.00	0.95	0.95	0.96	0.93	0.96	0.33	0.25
AR-GAP(3)	1.00	0.98	0.98	1.00	0.96	0.97	0.33	0.25
AR-GAP(4)	0.99	0.95	0.95	0.96	0.93	0.96	0.33	0.25
RW(4)	1.05	0.98	0.99	1.01	0.97	0.96	0.23	0.2
Phillips(4)	0.93	0.94	0.95	0.95	0.93	0.95	0.33	0.25
LSTAR($\rho = 4$, $c = 2$, $\gamma = 0.3$)	0.98	0.95	0.95	0.97	0.95	0.95	0.32	0.24
RF(4)	1.05	1.06	1.03	1.07	1.04	1.03	0.27	0.28
GBT(4)	0.97	0.99	0.93	0.95	0.93	0.93	0.25	0.35
FC(4)	**0.92**	**0.94**	0.94	0.96	0.93	0.94	0.33	0.25
Deep-NN(4)	0.94	0.97	0.96	0.98	0.94	0.92	0.31	0.32
Deep-NN(4) + Unemployment	1.00	0.97	**0.92**	**0.94**	**0.92**	**0.91**	**0.37**	0.32
HRNN(4)/GRU(4)	1.00	0.97	0.99	0.99	0.96	0.99	0.35	**0.37**

Notes: Prediction results for the CPI headline index alone. The RMSE results are relative to the *AR*(1) model and normalized according to its results, i.e., $\frac{RMSE_{Model}}{RMSE_{AR(1)}}$.

Table 4
HRNN(4) vs. I-GRU(4) at different levels of the CPI hierarchy with respect to AR(1).

Hierarchy level	HRNN(4)						I-GRU(4)					
	RMSE per horizon AR(1) = 1.00				Correlation (at horizon = 0)		RMSE per horizon AR(1) = 1.00				Correlation (at horizon = 0)	
	0	2	4	8	Pearson	Distance	0	2	4	8	Pearson	Distance
Level 1	0.95	0.97	0.99	1.00	0.33	0.37	0.98	0.98	0.99	0.97	0.25	0.38
Level 2	0.91	0.90	0.91	0.91	0.30	0.35	0.90	092	0.94	0.93	0.26	0.34
Level 3	0.79	0.79	0.80	0.81	0.21	0.31	0.82	0.89	0.94	0.94	0.23	0.37
Level 4	0.77	0.77	0.76	0.77	0.26	0.32	0.84	0.87	0.90	0.92	0.20	0.33
Level 5	0.79	0.77	0.77	0.80	0.21	0.31	0.85	0.89	0.89	0.93	0.22	0.29
Level 6	0.75	0.76	0.81	0.81	0.19	0.23	0.85	0.89	0.90	0.92	0.21	0.21
Level 7	0.75	0.78	0.77	0.80	0.17	0.17	0.87	0.89	0.92	0.94	0.18	0.15
Level 8	0.72	0.78	0.77	0.78	0.10	0.23	0.89	0.90	0.92	0.94	0.10	0.12

Notes: The RMSE results are relative to the *AR*(1) model and normalized according to its results, i.e., $\frac{RMSE_{Model}}{RMSE_{AR(1)}}$.

Table 5
HRNN(4) vs. I-GRU(4) results for different CPI sectors with respect to AR(1).

Industry sector	HRNN(4)						I-GRU(4)					
	RMSE per horizon AR(1) = 1.00				Correlation (at horizon = 0)		RMSE per horizon AR(1) = 1.00				Correlation (at horizon = 0)	
	0	2	4	8	Pearson	Distance	0	2	4	8	Pearson	Distance
Apparel	0.83	0.87	0.84	0.88	0.04	0.19	0.88	0.88	0.85	0.92	0.05	0.23
Energy	0.94	0.96	0.99	0.98	0.34	0.32	0.94	0.98	1.02	0.99	0.18	0.28
Food & Beverages	0.72	0.73	0.75	0.76	0.22	0.13	0.80	0.80	0.81	0.82	0.18	0.22
Housing	0.79	0.80	0.82	0.82	0.17	0.24	0.77	0.79	0.82	0.82	0.18	0.27
Medical Care	0.79	0.82	0.81	0.82	0.03	0.17	0.79	0.83	0.83	0.84	0.08	0.15
Recreation	0.99	0.99	1.00	1.00	0.05	0.17	1.00	0.99	1.00	1.00	−0.07	0.17
Services	0.90	0.92	0.95	0.94	0.04	0.15	0.89	0.94	0.95	0.96	0.02	0.21
Transportation	0.83	0.84	0.85	0.85	0.27	0.28	0.82	0.85	0.86	0.88	0.26	0.36

Notes: The RMSE results are relative to the *AR*(1) model and normalized according to its results, i.e., $\frac{RMSE_{Model}}{RMSE_{AR(1)}}$.

model for comparison. The results are averaged over all disaggregated components and presented as normalized gains with respect to the AR(1) model, as before. The best relative improvement of the HRNN(4) model appears to be in the Food and Beverages group. This can be explained by the fact that the Food and Beverages sub-hierarchy is the deepest and most elaborate hierarchy in the CPI tree. When the hierarchy is deeper and more elaborate, the advantages of the HRNN are emphasized.

Finally, Fig. 7 provides specific examples of three disaggregated indexes: Tomatoes, Bread, and Information Technology. The solid red line presents the actual CPI values. The dashed green line presents HRNN(4) predictions, while the dotted blue line presents I-GRU(4) predictions.

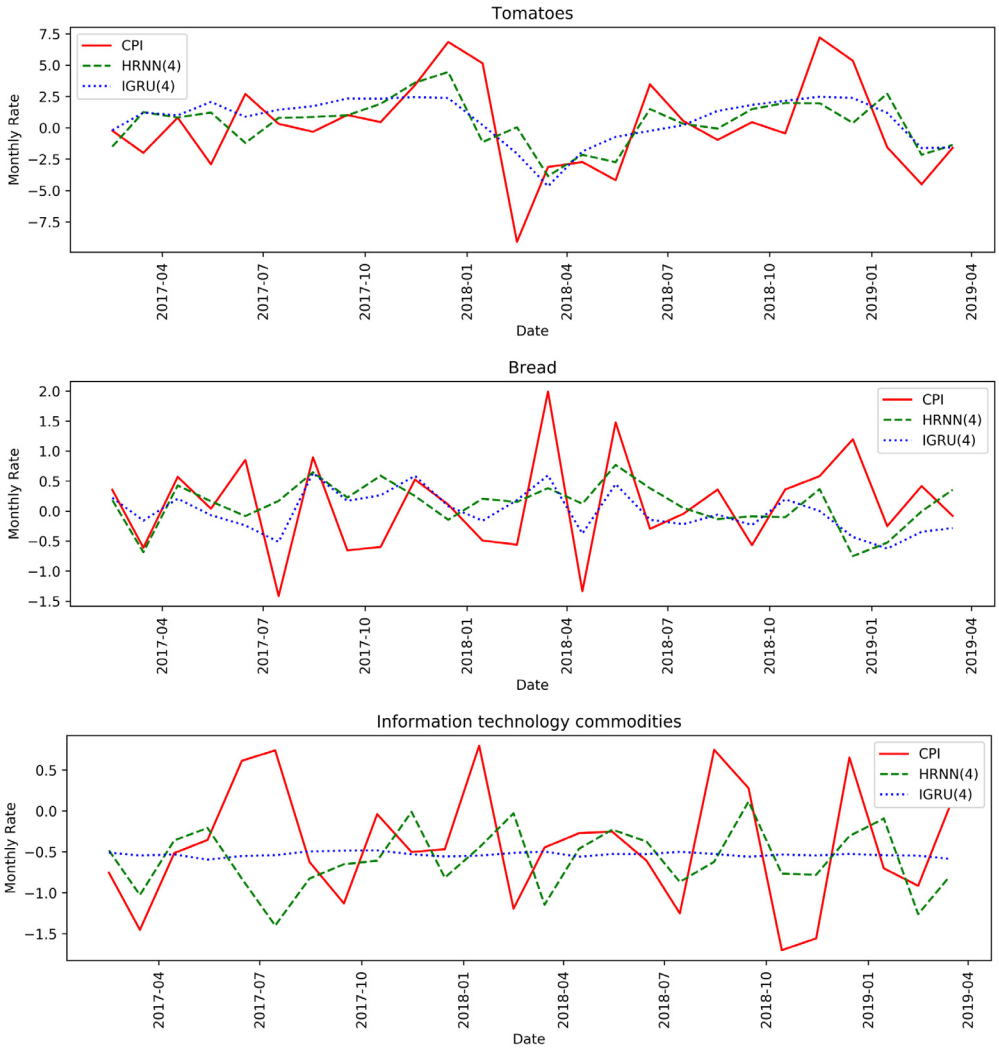

Fig. 7. Examples of HRNN(4) predictions for disaggregated indexes.

These indexes are located at the bottom of the CPI hierarchy and suffer from relatively high volatility. The HRNN(4) model seems to track and predict the trends of the real index accurately and often perform better than I-GRU(4). As can be seen, I-GRU's predictions appear to be more conservative than HRNN. At first, this may appear counterintuitive, as the HRNN has more regularization than I-GRU. However, this additional regularization is actually *informative regularization* coming from the parameters of the upper levels in the CPI hierarchy. This allows the HRNN model to be more expressive without overfitting. In contrast, in order to ensure that I-GRU does not overfit the training data, its other regularization techniques, such the learning rate hyperparameter and the early stopping procedure, prevent the I-GRU model from becoming overconfident. Figs. 9 and 10 in Appendix provide additional examples for a large variety of disaggregated CPI components.

6.5. HRNN dynamics

In what follows, we take a closer look at several characteristics of the HRNN model that result from the nonstationary nature of the CPI. The HRNN model is a deep learning hierarchical model that requires substantial training time depending on the available hardware. In this work, the HRNN model was trained once using the training dataset and evaluated on the test dataset, as explained above. In order to investigate the potential benefit from retraining the HRNN every quarter, we performed the following experiment: For a test-set period from 2001–2018, we retrained HRNN(4) after each quarter, each time adding the hierarchical CPI values of the last three months. Fig. 8 presents the results of this experiment. The dashed green line presents the RMSE of HRNN(4) with the regular training used in this work, while the dotted blue line presents the results of retraining the HRNN every quarter. As expected, in most cases, retraining the model with additional data from the recent period improves the

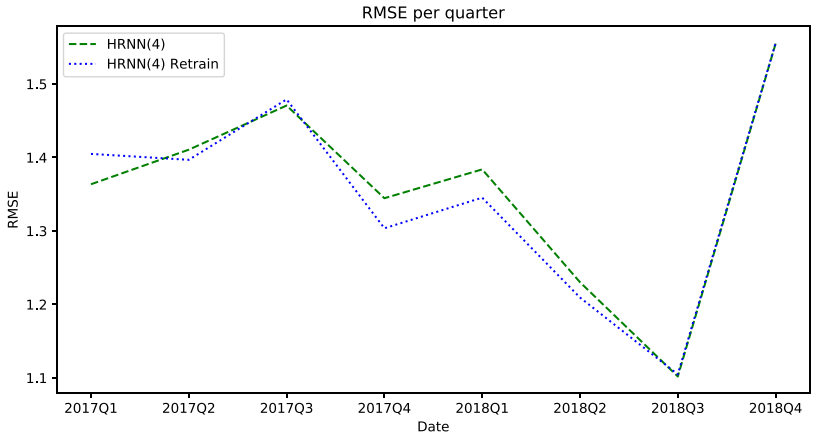

Fig. 8. Effect of retraining HRNN(4) each quarter.

Table 6
Average results on disaggregated CPI components prior to the GFC.

Model name*	RMSE per horizon AR(1) = 1.00						Correlation (at horizon = 0)	
	0	1	2	3	4	8	Pearson	Distance
AR(1)	1.00	1.00	1.00	1.00	1.00	1.00	0.07	0.05
AR(2)	1.00	1.00	1.00	1.00	1.00	1.00	0.08	0.06
AR(3)	1.00	1.00	1.00	1.00	1.00	1.00	0.09	0.07
AR(4)	1.00	1.00	1.00	1.00	1.00	1.00	0.09	0.07
AR-GAP(3)	1.00	1.00	1.00	1.00	1.00	1.00	0.09	0.07
AR-GAP(4)	1.00	1.00	1.00	1.00	1.00	1.00	0.10	0.07
RW(4)	1.00	1.00	1.00	1.00	1.00	1.00	0.05	0.04
Phillips(4)	1.00	1.00	0.99	0.99	1.00	1.00	0.05	0.03
VAR(1)	1.04	1.04	1.04	1.05	1.05	1.06	0.04	0.03
VAR(2)	1.03	1.04	1.04	1.04	1.05	1.05	0.05	0.03
VAR(3)	1.03	1.03	1.03	1.04	1.04	1.05	0.06	0.03
VAR(4)	1.02	1.03	1.03	1.03	1.03	1.04	0.06	0.04
LSTAR($\rho = 4$, $c = 2$, $\gamma = 0.3$)	1.05	1.06	1.05	1.08	1.09	1.10	0.08	0.06
RF(4)	0.92	0.91	0.91	0.92	0.92	0.95	0.2	0.29
GBT(4)	0.91	0.92	0.91	0.93	0.92	0.97	0.18	0.34
FC(4)	0.99	0.99	1.00	1.00	1.02	1.05	0.11	0.08
Deep-NN(4)	0.94	0.95	0.94	0.94	0.94	0.95	0.15	0.32
Deep-NN(4) + Unemployment	0.92	0.92	0.94	0.95	0.93	0.95	0.2	0.35
S-GRU(4)	1.05	1.09	1.09	1.10	1.09	1.10	0.09	0.07
I-GRU(4)	0.86	0.90	0.90	0.92	0.93	0.94	0.33	0.35
KNN-GRU(1)	0.94	0.96	0.96	0.96	0.97	0.98	0.10	0.07
KNN-GRU(2)	0.94	0.96	0.95	0.96	0.97	0.98	0.11	0.08
KNN-GRU(3)	0.93	0.96	0.95	0.96	0.96	0.98	0.11	0.08
KNN-GRU(4)	0.93	0.96	0.96	0.95	0.96	0.97	0.12	0.09
HRNN(1)	0.85	0.89	0.90	0.92	0.91	0.94	0.23	0.27
HRNN(2)	0.84	0.89	0.90	0.92	0.91	0.94	0.24	0.25
HRNN(3)	0.84	0.89	0.89	0.92	0.91	**0.93**	0.28	0.34
HRNN(4)	**0.83**	**0.88**	**0.88**	**0.91**	**0.90**	**0.93**	**0.35**	**0.37**

Notes: Average results across all 424 inflation indexes that make up the headline CPI. In contrast to Table 2, here we focus on the results up to the GFC of 2008. The RMSE results are relative to the *AR*(1) model and normalized according to its results, i.e., $\frac{RMSE_{Model}}{RMSE_{AR(1)}}$. The results are statistically significant according to a Diebold–Mariano test with $p < 0.05$.

results. However, this improvement is moderate and the overall model quality is about the same.

In order to study the GFC effect on HRNN's performance, we removed the data from 2008 onward and repeated the experiment of Table 2, using only the data from 1997 up to 2008. The results of this experiment are summarized in Table 6. In terms of the RMSE, the gains of the HRNN in Table 2 vary from 0.78 up to 0.8, in contrast to Table 6 where the gains vary from 0.83 to 0.93. This reveals that during the turmoil of the GFC, when the demand for reliable and precise forecasting tools is enhanced, the HRNN's forecasting abilities remain robust. In fact, its forecasting superiority was somewhat enhanced during the GFC when compared to the AR(1) baseline.

7. Concluding remarks

Policymakers have a wide range of predictive tools at their disposal to forecast headline inflation: survey data,

Table 7
Indexes, levels 0 and 1.

Level	Index	Parent
0	All items	–
1	All items less energy	All items
1	All items less food	All items
1	All items less food and energy	All items
1	All items less food and shelter	All items
1	All items less food, shelter, and energy	All items
1	All items less food, shelter, energy, and used cars and trucks	All items
1	All items less homeowners costs	All items
1	All items less medical care	All items
1	All items less shelter	All items
1	Apparel	All items
1	Apparel less footwear	All items
1	Commodities	All items
1	Commodities less food	All items
1	Durables	All items
1	Education and communication	All items
1	Energy	All items
1	Entertainment	All items
1	Food	All items
1	Food and beverages	All items
1	Fuels and utilities	All items
1	Household furnishings and operations	All items
1	Housing	All items
1	Medical care	All items
1	Nondurables	All items
1	Nondurables less food	All items
1	Nondurables less food and apparel	All items
1	Other goods and services	All items
1	Other services	All items
1	Recreation	All items
1	Services	All items
1	Services less medical care services	All items
1	Services less rent of shelter	All items
1	Transportation	All items
1	Utilities and public transportation	All items

Note: Levels and parents of indexes might change through time.

expert forecasts, inflation swaps, economic and econometric models, etc. However, policy institutions lack models and data to assist with forecasting CPI components, which are essential for a deeper understanding of the underlying dynamics. The understanding of disaggregated inflation trends can provide insight into the nature of future inflation pressures, their transitory factors (seasonal factors, energy, etc.), and other factors that influence market-makers and the conduct of monetary policy, among other decision-makers. Hence, our hierarchical approach uses endogenous historical data to forecast the CPI at the disaggregated level, rather than forecasting headline inflation, even if it performs well (Ibarra, 2012).

The business cycle plays an important role in inflation dynamics, particularly through specific product classes. CPI inflation dynamics are sometimes driven by components unrelated to central bank policy objectives, such as food and energy prices. A disaggregated CPI forecast provides a more accurate picture of the sources and features of future inflation pressures in the economy, which in turn improves policymakers' response efficiency. Indeed, forecasting sectoral inflation may improve the optimization problem faced by the central bank (Ida, 2020).

While similar headline inflation forecasts may correspond to various underlying economic factors, a disaggregated perspective allows understanding and analyzing the decomposition of these inflation forecasts at the sectoral or component level. Instead of disaggregating inflation to forecast the headline inflation (Stock & Watson, 2020), our approach allows policy- and market-makers to forecast specific sector and component prices, where information is less available: almost no component- or sector-specific survey forecasts, expert forecasts, or market-based forecasts exist. For instance, a central bank could use such modeling features to consider components that contribute to inflation (military, food, cigarettes, and energy) unrelated to its primary inflation objectives to improve their final assessment of their inflation forecasts. Sector-specific inflation forecasts should also inform economic policy recommendations at the sectoral level, and market-makers can better direct and tune their investment strategies (Swinkels, 2018).

In traditional approaches for inflation forecasting, a theoretical or a linear model is often used, which inevitably biases the estimated forecasts. Our novel approach may overcome the usual shortcomings of traditional forecasts, giving policymakers new insights from a different angle. Disaggregated forecasts include explanatory variables with hierarchies that reduce measurement errors at the component level. Additionally, our model structure attenuates component-specific residuals derived from each level and sector, resulting in improved forecasting. For all these reasons, we believe that the

Table 8
Indexes, level 2.

Level	Index	Parent
2	All items less food and energy	All items less energy
2	Apparel commodities	Apparel
2	Apparel services	Apparel
2	Commodities less food	Commodities
2	Commodities less food and beverages	Commodities
2	Commodities less food and energy commodities	All items less food and energy
2	Commodities less food, energy, and used cars and trucks	Commodities
2	Communication	Education and communication
2	Domestically produced farm food	Food and beverages
2	Education	Education and communication
2	Energy commodities	Energy
2	Energy services	Energy
2	Entertainment commodities	Entertainment
2	Entertainment services	Entertainment
2	Food	Food and beverages
2	Food at home	Food
2	Food away from home	Food
2	Footwear	Apparel
2	Fuels and utilities	Housing
2	Homeowners costs	Housing
2	Household energy	Fuels and utilities
2	Household furnishings and operations	Housing
2	Infants' and toddlers' apparel	Apparel
2	Medical care commodities	Medical care
2	Medical care services	Medical care
2	Men's and boys' apparel	Apparel
2	Nondurables less food	Nondurables
2	Nondurables less food and apparel	Nondurables
2	Nondurables less food and beverages	Nondurables
2	Nondurables less food, beverages, and apparel	Nondurables
2	Other services	Services
2	Personal and educational expenses	Other goods and services
2	Personal care	Other goods and services
2	Pets, pet products and services	Recreation
2	Photography	Recreation
2	Private transportation	Transportation
2	Public transportation	Transportation
2	Rent of shelter	Services
2	Services less energy services	All items less food and energy
2	Services less medical care services	Services
2	Services less rent of shelter	Services
2	Shelter	Housing
2	Tobacco and smoking products	Other goods and services
2	Transportation services	Services
2	Video and audio	Recreation
2	Women's and girls' apparel	Apparel

Note: Levels and parents of indexes have changed over the years.

HRNN can be a valuable tool for asset managers, policy institutions, and market-makers lacking component-specific price forecasts critical to their decision processes.

The HRNN model was designed for predicting disaggregated CPI components. However, we believe its merits may be useful for predicting other hierarchical time series, such as GDP. In future work, we plan to investigate the performance of the HRNN model on additional hierarchical time series. Moreover, in this paper we focused mainly on endogenous models that do not consider other economic variables. The HRNN can naturally be extended to include different variables as side information by changing the input for the GRU components to be a multidimensional time series (instead of a one-dimensional vector). We plan to experiment with additional side information that can potentially improve the prediction accuracy. In particular, we will experiment with online price data, as in Aparicio & Bertolotto (2020). Finally, we will try to replace the RNNs in the model with neural self-attention (Shaw et al., 2018). Hopefully, this will lead to improved accuracy and better explainability through the analysis of attention scores (Hsieh et al., 2021).

Declaration of competing interest

The authors declare that they have no known competing financial interests or personal relationships that could have appeared to influence the work reported in this paper.

Appendix. Additional tables and figures

See Figs. 9 and 10 and Tables 7 and 8.

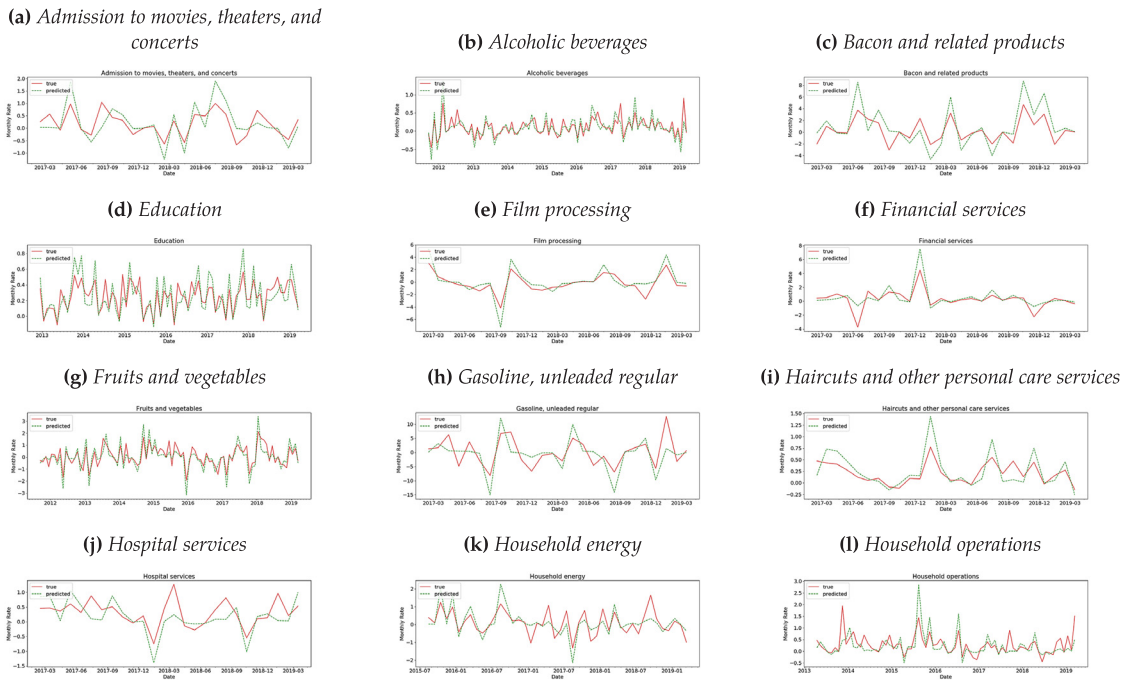

Fig. 9. Additional examples of HRNN(4) predictions for disaggregated indexes.

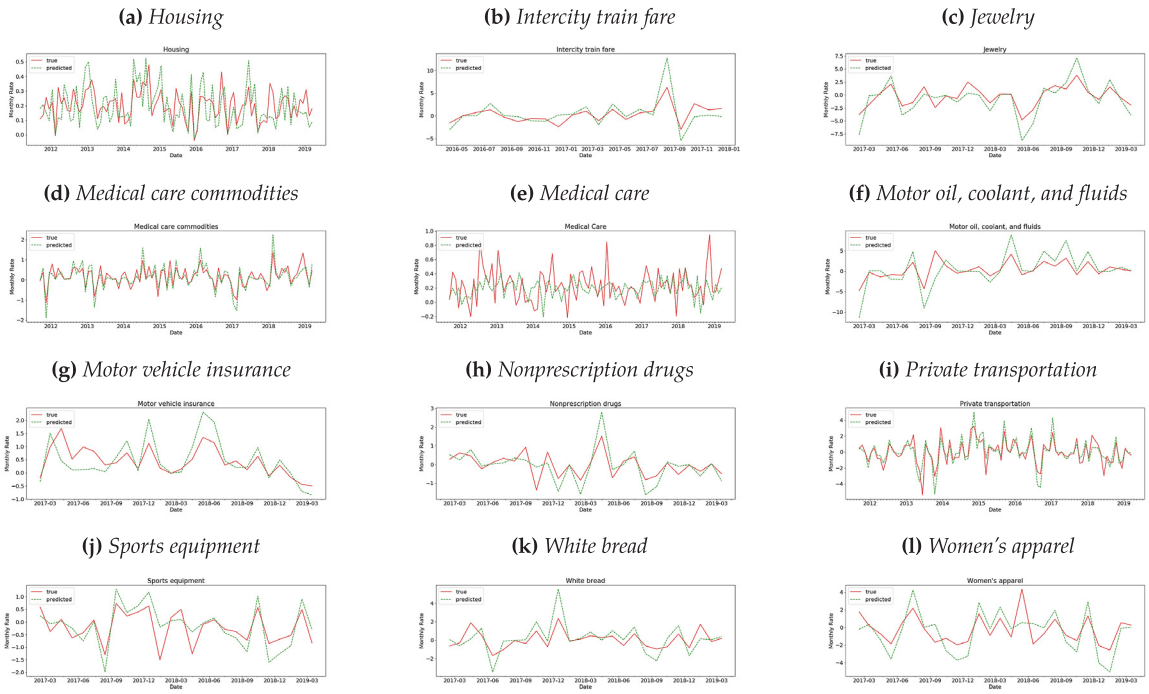

Fig. 10. Additional examples of HRNN(4) predictions for disaggregated indexes. Indexes in Figs. 9 and 10 were selected from different hierarchies and sectors.

References

Almosova, A., & Andresen, N. (2019). *Nonlinear inflation forecasting with recurrent neural networks*: *Technical Report*, European Central Bank (ECB).

Aparicio, D., & Bertolotto, M. I. (2020). Forecasting inflation with online prices. *International Journal of Forecasting*, *36*(2), 232–247.

Athey, & Susan (2018). The impact of machine learning on economics. In *The economics of artificial intelligence: An agenda* (pp. 507–547). University of Chicago Press.

Atkeson, A., & Ohanian, L. E. (2001). Are phillips curves useful for

forecasting inflation? *Federal Reserve Bank of Minneapolis Quarterly Review*, *25*(1), 2–11.
Bernanke, B. S., Laubach, T., Mishkin, F. S., & Posen, A. S. (2018). *Inflation targeting: lessons from the international experience*. Princeton, NJ: Princeton University Press.
Breiman, L. (2001). Random forests. *Machine Learning*, *45*(1), 5–32.
Chakraborty, C., & Joseph, A. (2017). Machine learning at central banks. *Bank of England Working Papers, Number 674*.
Chen, X., Racine, J., & Swanson, N. R. (2001). Semiparametric ARX neural-network models with an application to forecasting inflation. *IEEE Transactions on Neural Networks*, *12*(4), 674–683.
Choudhary, M. A., & Haider, A. (2012). Neural network models for inflation forecasting: An appraisal. *Applied Economics*, *44*(20), 2631–2635.
Chung, J., Gulcehre, C., Cho, K., & Bengio, Y. (2014). Empirical evaluation of gated recurrent neural networks on sequence modeling. arXiv preprint arXiv:1412.3555.
Clevert, D. A., Unterthiner, T., & Hochreiter, S. (2016). Fast and accurate deep network learning by exponential linear units (ELUs). arXiv: Learning.
Dey, R., & Salemt, F. M. (2017). Gate-variants of gated recurrent unit (GRU) neural networks. In *2017 IEEE 60th international midwest symposium on circuits and systems* (pp. 1597–1600). IEEE.
Diebold, F. X., & Mariano, R. S. (1995). Comparing predictive accuracy. *Journal of Business & Economic Statistics*, *13*(3), 253–263.
van Dijk, D., Terasvirta, T., & Franses, P. H. (2002). Smooth transition autoregressive models — A survey of recent developments. *Econometric Reviews*, *21*(1), 1–47.
Faust, J., & Wright, J. H. (2013). Forecasting inflation. In G. Elliott, C. Granger, & A. Timmermann (Eds.), *Handbook of economic forecasting*: *vol. 2*, *Handbook of economic forecasting* (pp. 2–56). Elsevier.
Friedman, M. (1961). The lag in effect of monetary policy. *Journal of Political Economy*, *69*, 447.
Friedman, J. H. (2002). Stochastic gradient boosting. *Computational Statistics & Data Analysis*, *38*(4), 367–378.
Gilchrist, S., Schoenle, R., Sim, J., & Zakrajšek, E. (2017). Inflation dynamics during the financial crisis. *American Economic Review*, *107*(3), 785–823.
Goulet Coulombe, P. (2020). To bag is to prune. arXiv e-Prints, arXiv–2008.
Goulet Coulombe, P., Leroux, M., Stevanovic, D., & Surprenant, S. (2022). How is machine learning useful for macroeconomic forecasting? *Journal of Applied Econometrics*, in press.
Hansen, P. R., Lunde, A., & Nason, J. M. (2011). The model confidence set. *Econometrica*, *79*(2), 453–497.
Hochreiter, S., & Schmidhuber, J. (1997). Long short-term memory. *Neural Computation*, *9*(8), 1735–1780.
Hsieh, T.-Y., Wang, S., Sun, Y., & Honavar, V. (2021). Explainable multivariate time series classification: A deep neural network which learns to attend to important variables as well as time intervals. In *Proceedings of the 14th ACM international conference on web search and data mining* (pp. 607–615).
Ibarra, R. (2012). Do disaggregated CPI data improve the accuracy of inflation forecasts? *Economic Modelling*, *29*(4), 1305–1313.
Ida, D. (2020). Sectoral inflation persistence and optimal monetary policy. *Journal of Macroeconomics*, *65*(C).
Lipton, Z. C., Berkowitz, J., & Elkan, C. (2015). A critical review of recurrent neural networks for sequence learning. *CoRR*.
Makridakis, S., Assimakopoulos, V., & Spiliotis, E. (2018). Objectivity, reproducibility and replicability in forecasting research. *International Journal of Forecasting*, *34*(4), 835–838.
Makridakis, S., Spiliotis, E., & Assimakopoulos, V. (2020). The M4 competition: 100,000 time series and 61 forecasting methods. *International Journal of Forecasting*, *36*(1), 54–74.
Mandic, D., & Chambers, J. (2001). *Recurrent neural networks for prediction: Learning algorithms, architectures and stability*. Wiley.
McAdam, P., & McNelis, P. (2005). Forecasting inflation with thick models and neural networks. *Economic Modelling*, *22*(5), 848–867.
Medeiros, M., Vasconcelos, G., Veiga, A., & Zilberman, E. (2021). Forecasting inflation in a data-rich environment: the benefits of machine learning methods. *Journal of Business & Economic Statistics*, *39*(1).
Mullainathan, S., & Spiess, J. (2017). Machine learning: an applied econometric approach. *Journal of Economic Perspectives*, *31*(2), 87–106.
Nakamura, E. (2005). Inflation forecasting using a neural network. *Economics Letters*, *86*(3), 373–378.
Olson, M., Wyner, A. J., & Berk, R. (2018). Modern neural networks generalize on small data sets. In *Proceedings of the 32nd international conference on neural information processing systems* (pp. 3623–3632).
Ramachandran, P., Zoph, B., & Le, Q. V. (2017). Searching for activation functions. *CoRR*.
Schapire, R. E. (1999). A brief introduction to boosting. In *IJCAI'99*, *Proceedings of the 16th international joint conference on artificial intelligence - Vol. 2* (pp. 1401–1406). San Francisco, CA, USA: Morgan Kaufmann Publishers Inc..
Shaw, P., Uszkoreit, J., & Vaswani, A. (2018). Self-attention with relative position representations. arXiv preprint arXiv:1803.02155.
Song, Y.-Y., & Ying, L. (2015). Decision tree methods: applications for classification and prediction. *Shanghai Archives of Psychiatry*, *27*(2), 130.
Stock, J. H., & Watson, M. W. (2007). Why has US inflation become harder to forecast? *Journal of Money, Credit and Banking*, *39*, 3–33.
Stock, J. H., & Watson, M. W. (2010). *Modeling inflation after the crisis*: *Technical Report*, National Bureau of Economic Research.
Stock, J. H., & Watson, M. W. (2020). Trend, seasonal, and sectorial inflation in the euro area. In G. Castex, J. Galí, & D. Saravia (Eds.), *Central banking, analysis, and economic policies book series*: *vol. 27*, *Changing inflation dynamics,evolving monetary policy* (pp. 317–344). Central Bank of Chile.
Swinkels, L. (2018). Simulating historical inflation-linked bond returns. *Journal of Empirical Finance*, *48*(C), 374–389.
Székely, G. J., Rizzo, M. L., & Bakirov, N. K. (2007). Measuring and testing dependence by correlation of distances. *The Annals of Statistics*, *35*(6), 2769–2794.
Woodford, M. (2012). Inflation targeting and financial stability. *Sveriges Riksbank Economic Review*, *1*, 7–32.
Yu, Y., Si, X., Hu, C., & Zhang, J. (2019). A review of recurrent neural networks: LSTM cells and network architectures. *Neural Computation*, *31*(7), 1235–1270.
Zahara, S., & Ilmiddaviq, M. (2020). Consumer price index prediction using long short term memory (LSTM) based cloud computing. *Journal of Physics: Conference Series*, *1456*, Article 012022.
Zhou, Z. (2012). Measuring nonlinear dependence in time-series, A distance correlation approach. *Journal of Time Series Analysis*, *33*(3), 438–457.