# SAMSUNG SM-A310F Schematic Diagram

SAMSUNG

Schematic Diagram

Mobile1Tech
mobile1tech.com
HARDWARE

SAMSUNG CONFIDENTIAL
THIS DOCUMENT CONTAINS CONFIDENTIAL
AND PROPRIETARY INFORMATION OF
SAMSUNG ELECTRONICS CO'S PROPERTY.
DO NOT DISCLOSE TO OR DUPLICATE FOR OTHERS
EXCEPT AS AUTHORIZED BY SAMSUNG.

# SM-A310F_NEW A3 REV 0.2

Mobile1Tech.com

sheet01 : GSM / WCDMA / LTE RF (MAIN)
sheet02 : GSM / WCDMA / LTE RF (SUB)
sheet03 : GPS, BT/WIFI, NFC
sheet04 : CP/AP (ONE CHIP)
sheet05 : PMIC, eMMC, IF PMIC, SIM&SD COMBO
sheet06 : AUDIO, SENSOR
sheet07 : CAMERA, OCTA, SUB CON

Engineer
Issued by:
R&D CHK:
DOC CTRL CHK:
MFG ENGR CHK:
QA CHK:
TITLE:
SIZE A1
Drawing Number
3/8

Changed by: Date Changed: Total Changed:

SAMSUNG CONFIDENTIAL
THIS DOCUMENT CONTAINS CONFIDENTIAL AND PROPRIETARY INFORMATION OF SAMSUNG ELECTRONICS CO'S PROPERTY. DO NOT DISCLOSE TO OR DUPLICATE FOR OTHERS EXCEPT AS AUTHORIZED BY SAMSUNG.

# #1 RF

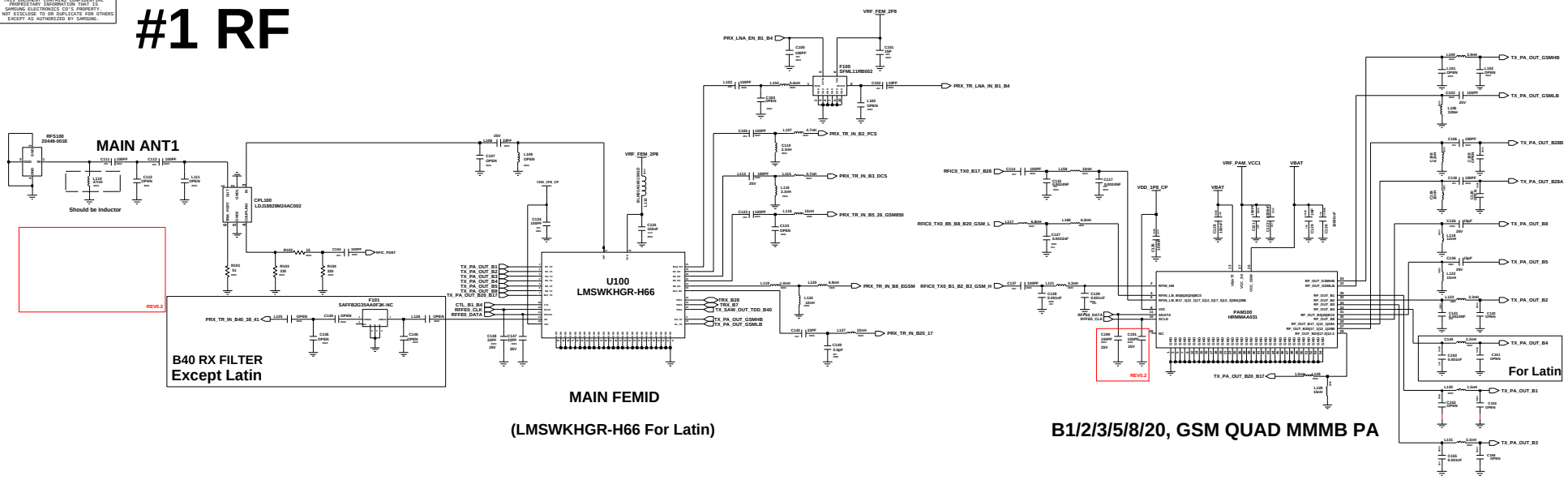


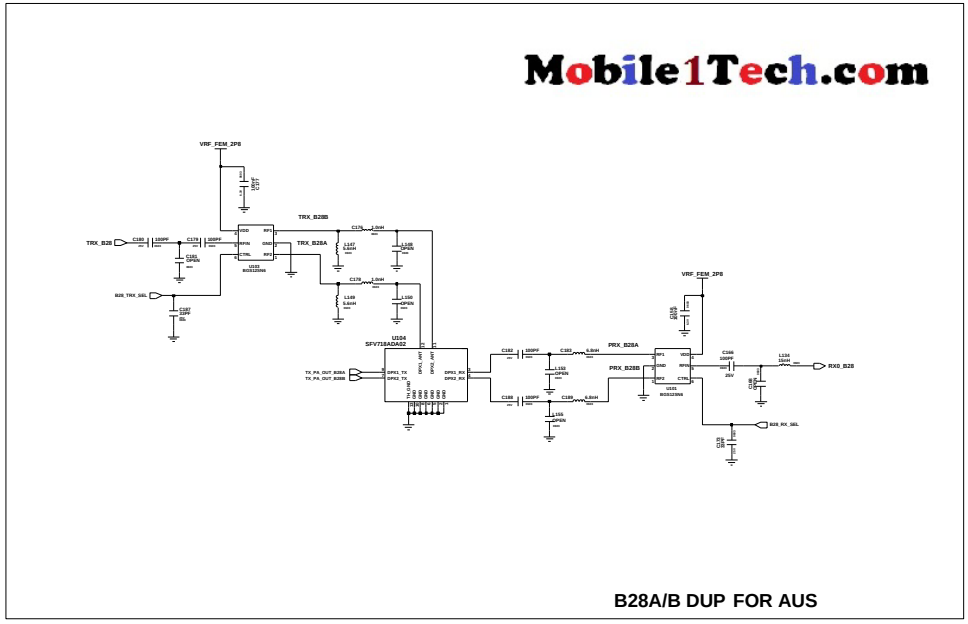


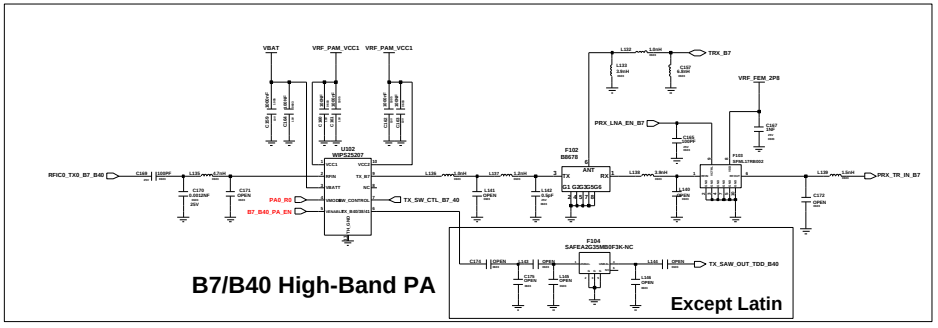


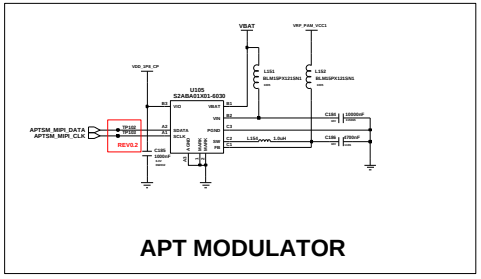


| Engineer | RF |
|---|---|
| Issue No | |
| RED CHK | TITLE: |
| DOC CTRL CHK | |
| MFG ENGR CHK | |
| QA CHK | Drawing Number |

SAMSUNG CONFIDENTIAL
THIS DOCUMENT CONTAINS CONFIDENTIAL PROPRIETARY INFORMATION THAT IS SAMSUNG ELECTRONICS CO'S PROPERTY. DO NOT DISCLOSE TO OR DUPLICATE FOR OTHERS EXCEPT AS AUTHORIZED BY SAMSUNG.

# DIVERSITY

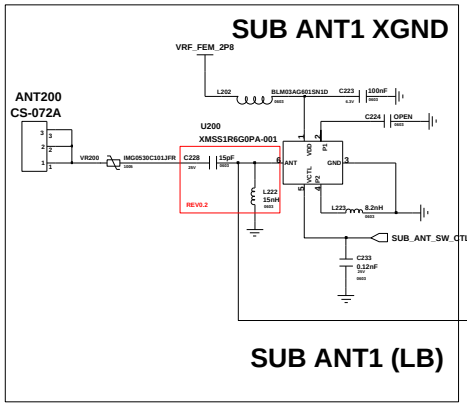


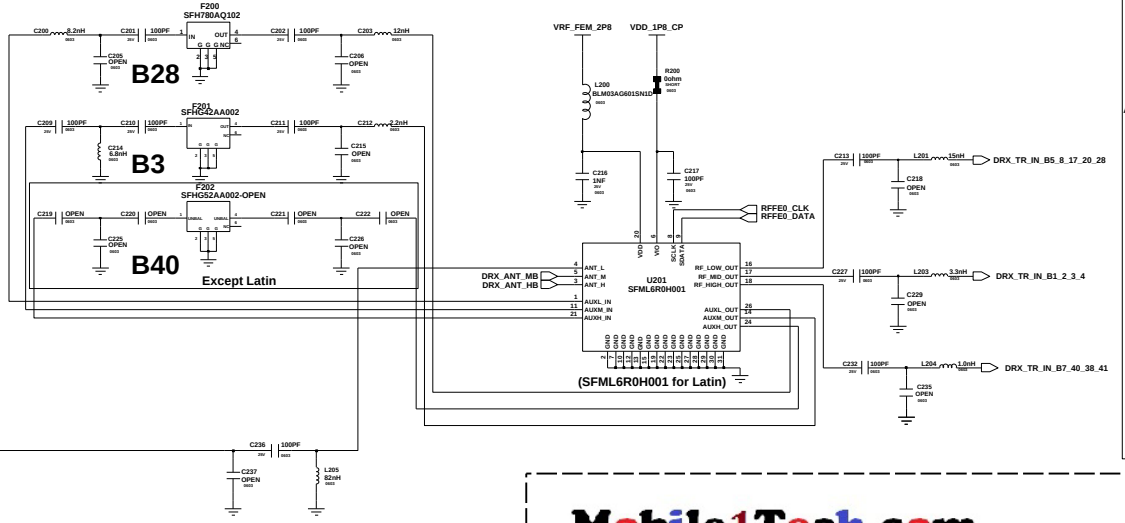


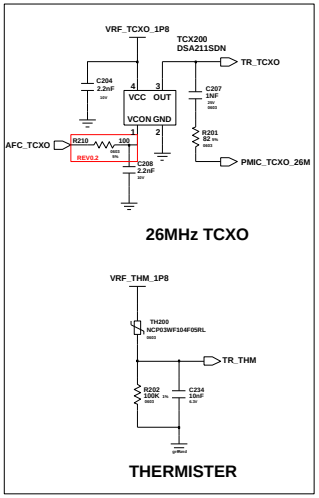


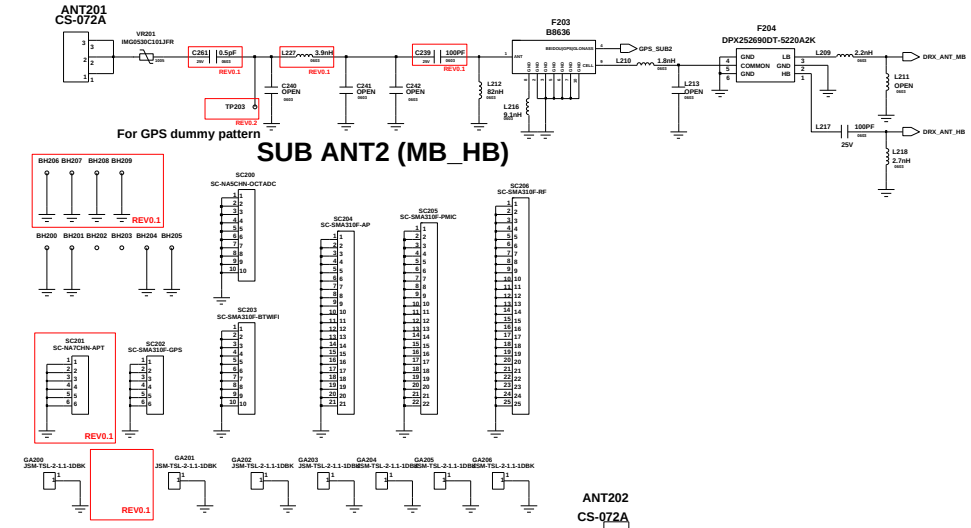


Mobile1Tech.com

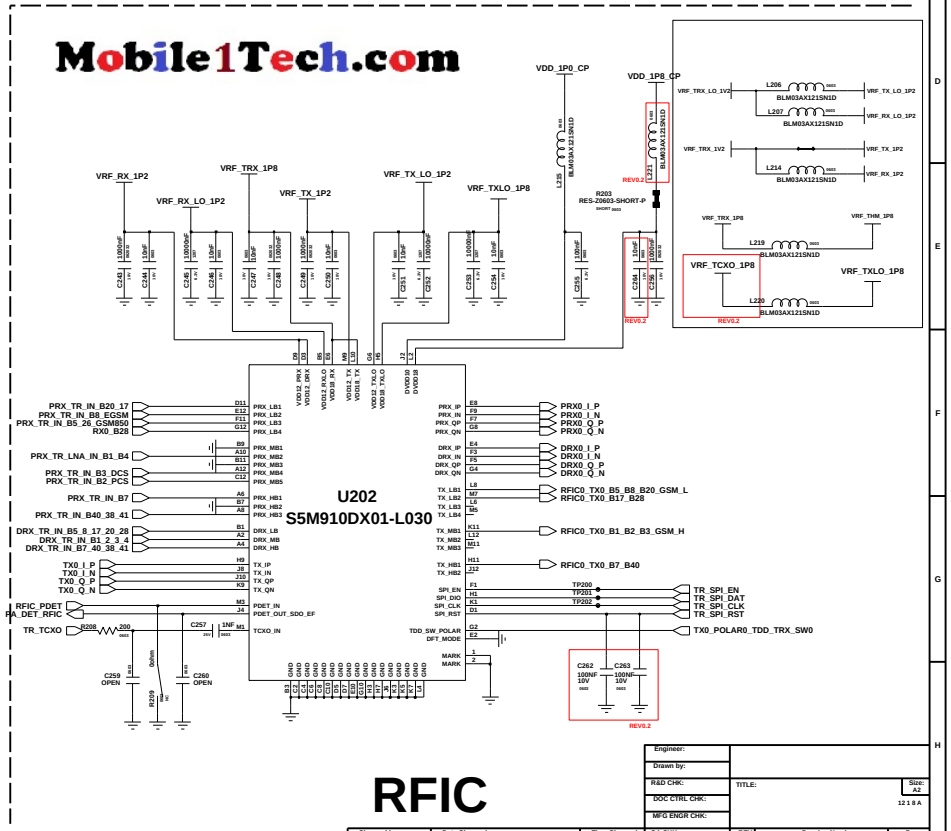


# RFIC

| Changed by: | Date Changed: | Time Changed: | QA CHK: | REV: | Drawing Number: | Page: 2 |
|---|---|---|---|---|---|---|

Engineer:
Drawn by:
R&D CHK:
DOC CTRL CHK:
MFG ENGR CHK:
TITLE:
Size: A2
12 1 8 A

SAMSUNG CONFIDENTIAL
THIS DOCUMENT CONTAINS CONFIDENTIAL
AND PROPRIETARY INFORMATION OF
SAMSUNG ELECTRONICS CO'S PROPERTY.
DO NOT DISCLOSE TO OR DUPLICATE FOR OTHERS
EXCEPT AS AUTHORIZED BY SAMSUNG.

# GPS

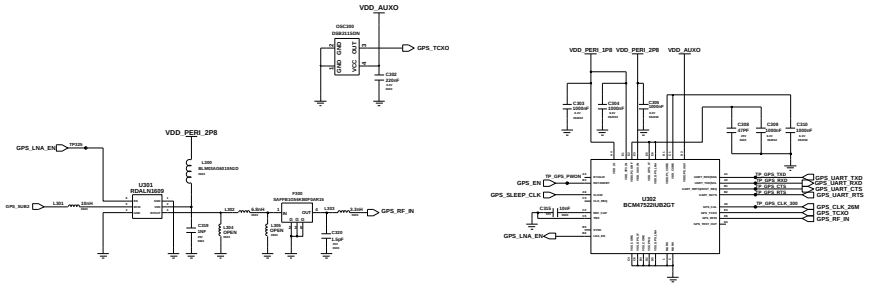


# NFC

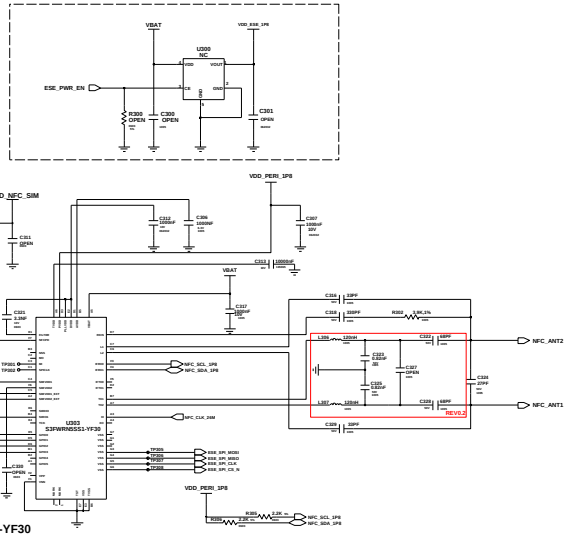


Need tol be change to S3FWRN5SS1-YF30

# BT/WIFI

Mobile1Tech.com

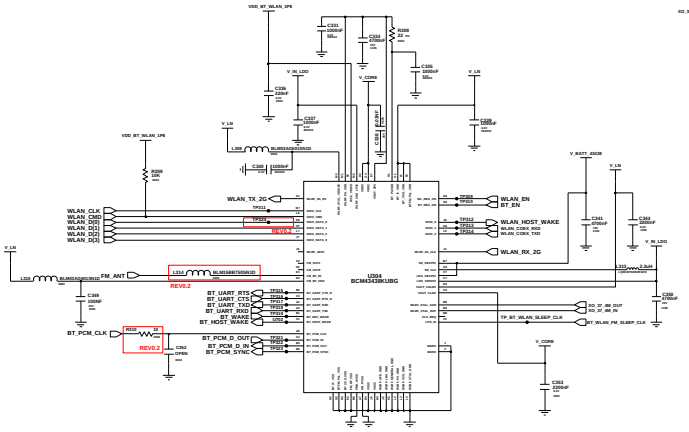


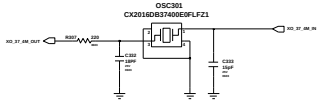


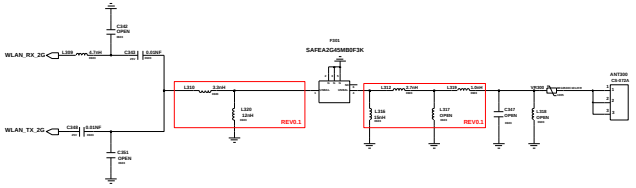


| | |
|---|---|
| | GPS / NFC / BT / WIFI |

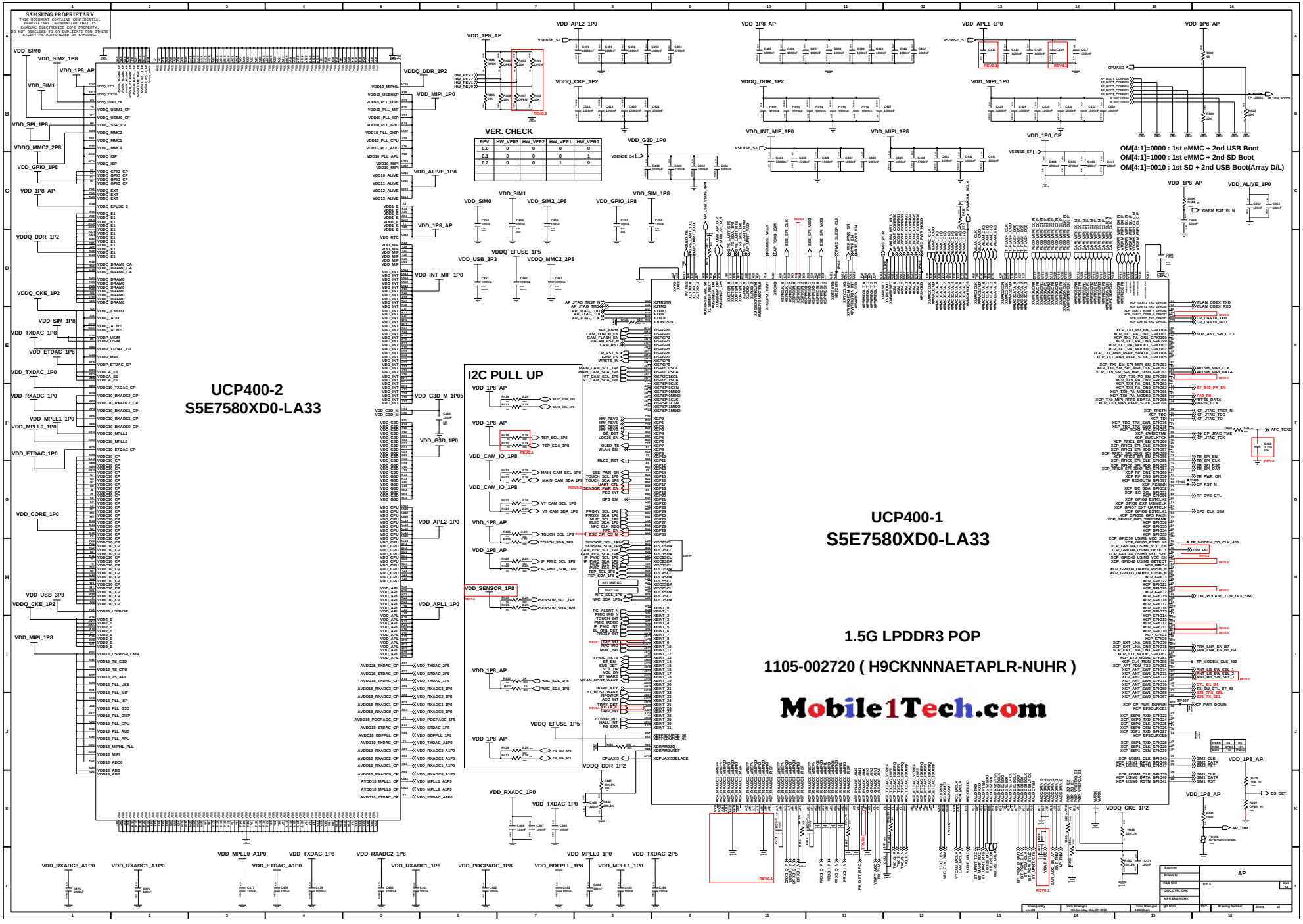


user45|swcad45|10.253.15.68|20151202-115607

SAMSUNG CONFIDENTIAL
THIS DOCUMENT CONTAINS SAMSUNG ELECTRONICS PROPRIETARY INFORMATION THAT IS SAMSUNG ELECTRONICS CO'S PROPERTY. DO NOT COPY OR DISTRIBUTE TO ANYONE WITHOUT SUCH SUCH AUTHORIZED BY SAMSUNG.

# POWER

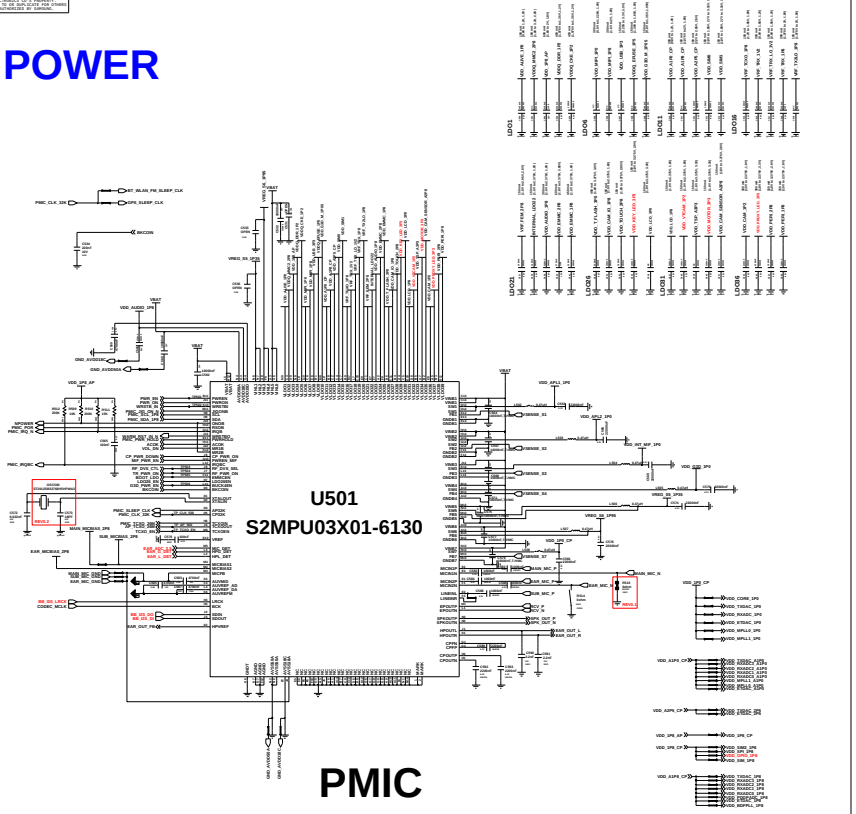


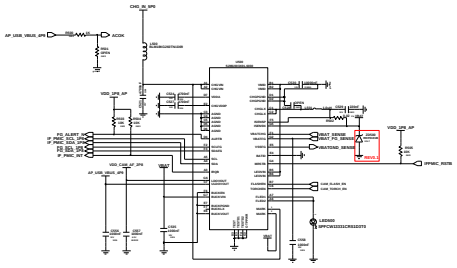

IF PMIC(CHG+FG+BUCK+LDO)

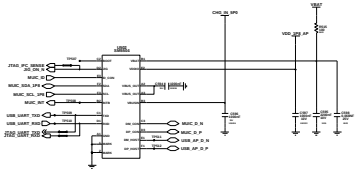

MUIC

# 16GB eMMC 5.0 MLC

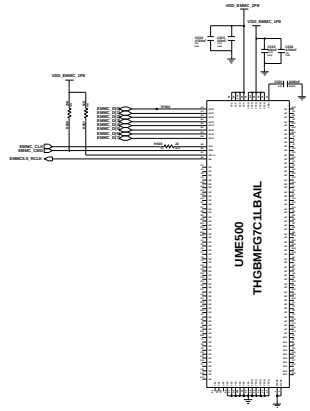


# SIM & SD

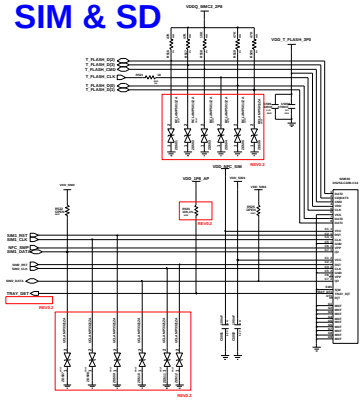

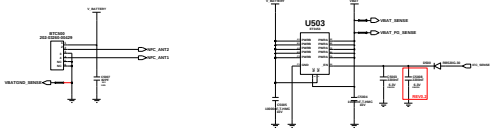


Battery Connector

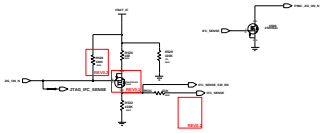

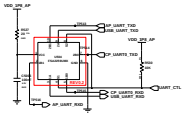

AP/CP UART SWITCH

Mobile1Tech.com

PCB JTAG

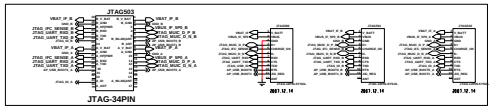


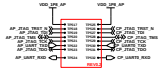

AP JTAG CP JTAG

E
A
L

| | |
|---|---|
| Samsung Electronics | PMU |
| Samsung Electronics Co., Ltd. | |

SAMSUNG CONFIDENTIAL
THIS DOCUMENT CONTAINS CONFIDENTIAL
AND PROPRIETARY INFORMATION OF
SAMSUNG ELECTRONICS CO'S PROPERTY.
DO NOT DISCLOSE TO OR DUPLICATE FOR OTHERS
EXCEPT AS AUTHORIZED BY SAMSUNG.

# AUDIO

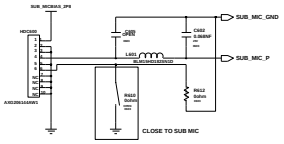


SUB MIC

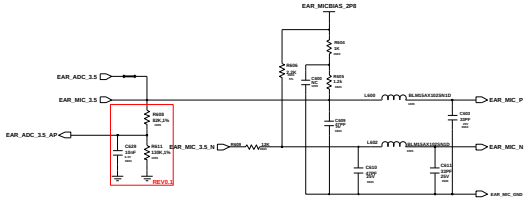


Ear MIC

Mobile1Tech.com

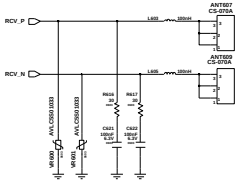


RCV Contact

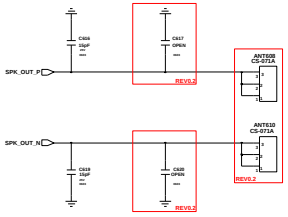


SPK Contact

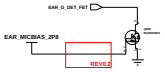


E/J Detect

# SENSOR

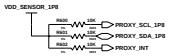


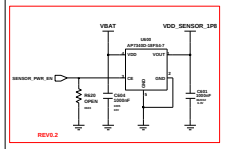


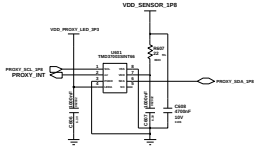


Proxy +RGB Sensor

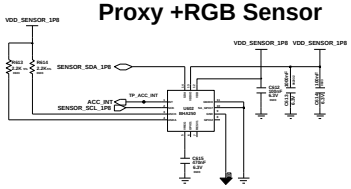


Sensor Hub integrated Accel Sensor

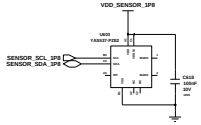


Magnetic Sensor

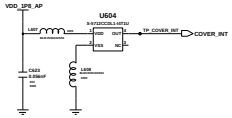


View Cover Detect

# KEY

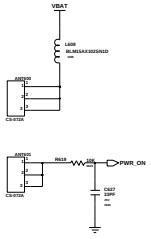


Power Key

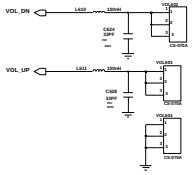


Volmue Key

# MOTOR

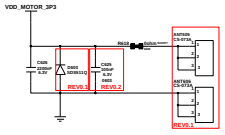


Motor Contact

| | | | |
|---|---|---|---|
| Engineer: | SAMSUNG ELECTRONICS | | |
| Design by: | | | |
| Check by: | | | |
| REV CHK: | TITLE: | SIZE: A4 | |
| DOC CTRL CHK: | N_A5_REV05_0327_2 | 16.5 X A | |
| MFG ENGR CHK: | | | |
| QA CHK: | REV: | Drawing Number: | Page: 1 |

Changed by: jun08 | Date Changed: Wednesday, May 27, 2015 | Time Changed: 4:19:03 pm

SAMSUNG CONFIDENTIAL
THIS DOCUMENT CONTAINS CONFIDENTIAL AND PROPRIETARY INFORMATION OF SAMSUNG ELECTRONICS CO'S PROPERTY. DO NOT DISCLOSE TO OR DUPLICATE FOR OTHERS EXCEPT AS AUTHORIZED BY SAMSUNG.

# CAMERA

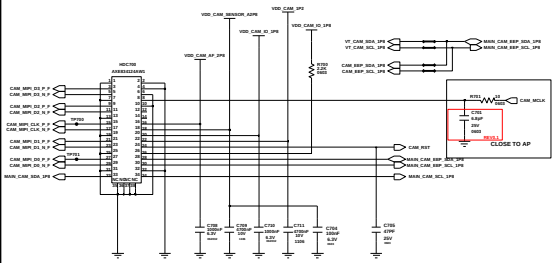

13M CAMERA CON

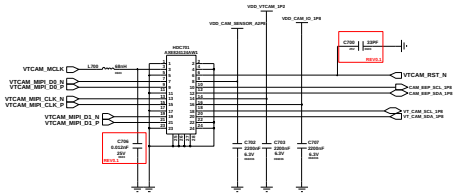

VT_CAMERA (5M)

Mobile1Tech.com

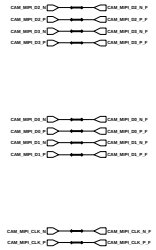

# DISPLAY

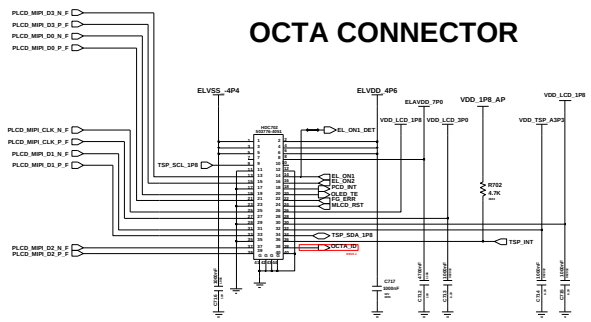


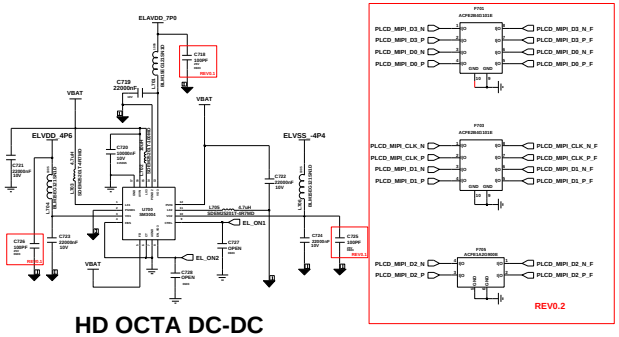

HD OCTA DC-DC

# IF SUB PBA Connector

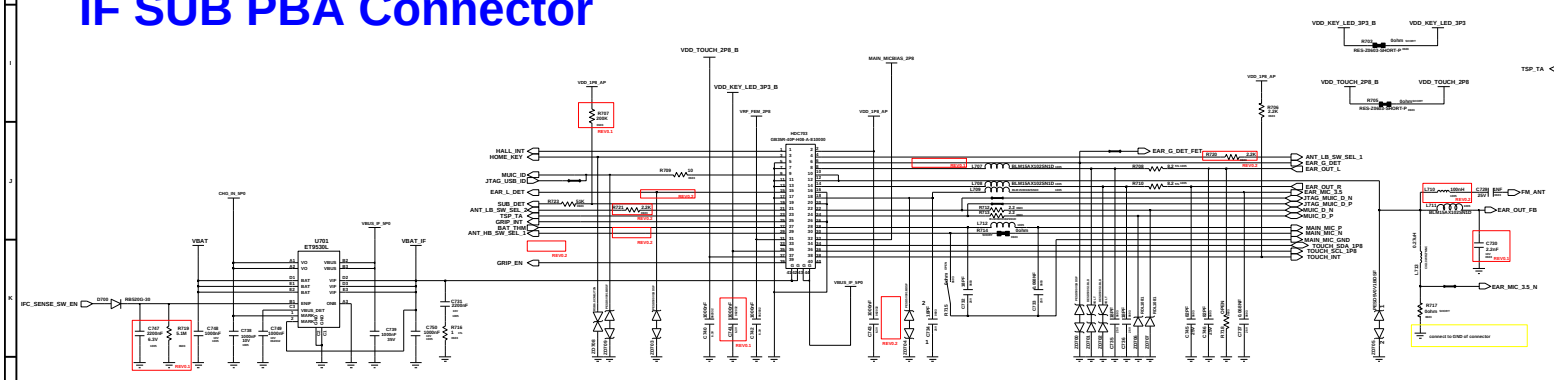

| | |
|---|---|
| Engineer: | CAM / DISPLAY |
| Design by: | |
| Drawn by: | |
| DCS | |
| R&D CHK: | TITLE: |
| DOC CTRL CHK: | |
| MFG ENGR CHK: | |
| QA CHK: | REV: Drawing Number: SIZE |

Changed by: Jaeil98 | Date Changed: Wednesday, May 27, 2015 | Time Changed: 8:13:18 am