(c) JEPPESEN SANDERSON, INC., 2021, ALL RIGHTS RESERVED

JEPPESEN
JeppView for Windows

List of pages in this Trip Kit

Додатково сценарій від Казуар Авіа містить ще й ILS для ЗПС 11 (схема відсутня)

Trip Kit Index
Airport Information For UKLR
Terminal Charts For UKLR
Revision Letter For Cycle 02-2021
Change Notices
Notebook

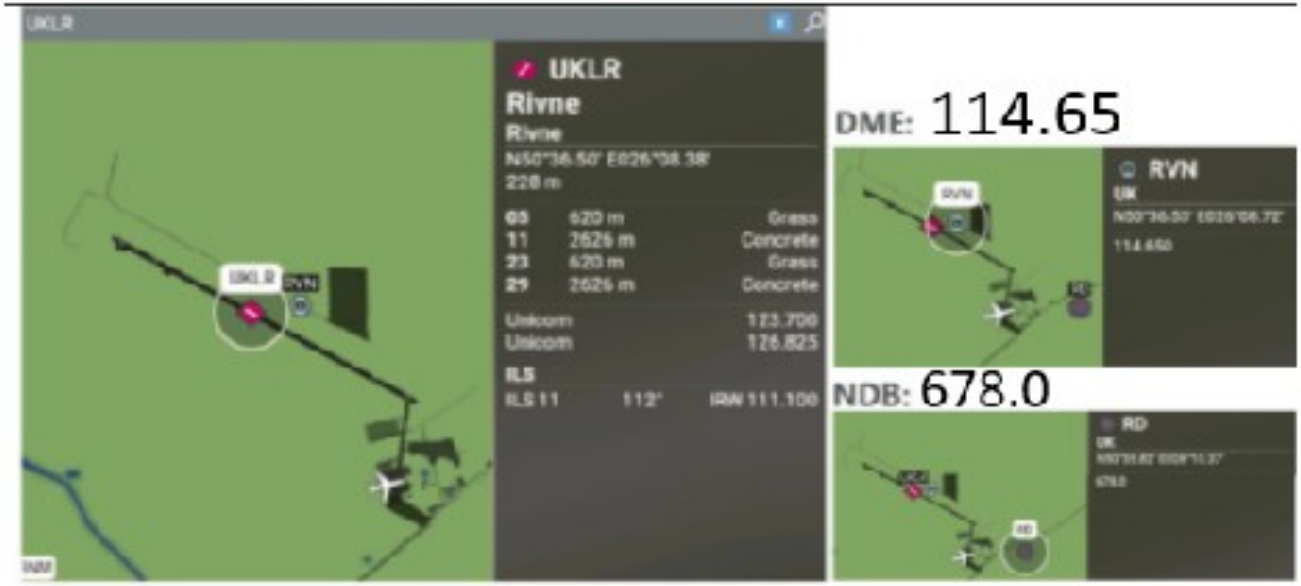

UNIQ ILS RW 11 with 2.67° slope
(instead of 3.00° standard)

**nowadays decommissioned but added to MSFS*

ILS RW 11 (course 112°) 111.100 MHz

(c) JEPPESEN SANDERSON, INC., 2021, ALL RIGHTS RESERVED

General Information

Location: RIVNE UKR
ICAO/IATA: UKLR / RWN
Lat/Long: N50° 36.50', E026° 08.38'
Elevation: 755 ft

Airport Use: Public
Daylight Savings: Observed
UTC Conversion: -2:00 = UTC
Magnetic Variation: 6.0° E

Fuel Types: Jet A-1
Customs: Yes
Airport Type: IFR
Landing Fee: Yes
Control Tower: Yes
Jet Start Unit: No
LLWS Alert: No
Beacon: No

Sunrise: 0607 Z
Sunset: 1446 Z

Runway Information

Runway: 11
Length x Width: 8615 ft x 138 ft
Surface Type: concrete
TDZ-Elev: 748 ft
Lighting: Edge, ALS

Runway: 29
Length x Width: 8615 ft x 138 ft
Surface Type: concrete
TDZ-Elev: 751 ft
Lighting: Edge, ALS

Communication Information

Rivne Tower: 123.700
Lviv Information: 126.825 Flight Info Service RCO

Printed from JeppView for Windows 5.3.0.0 on 20 Jan 2021; Terminal chart data cycle 02-2021; Notice: After 04 Feb 2021, 0000Z, this chart may no longer be valid

Apt Elev 755′

Alt Set: hPa
Trans level: By ATC Trans alt: 10010′

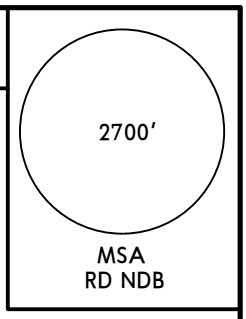

DORER 3P [DORE3P]
DORER 3Q [DORE3Q]
RELNO 3P [RELN3P]
RELNO 3Q [RELN3Q]
ARRIVALS

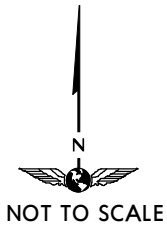

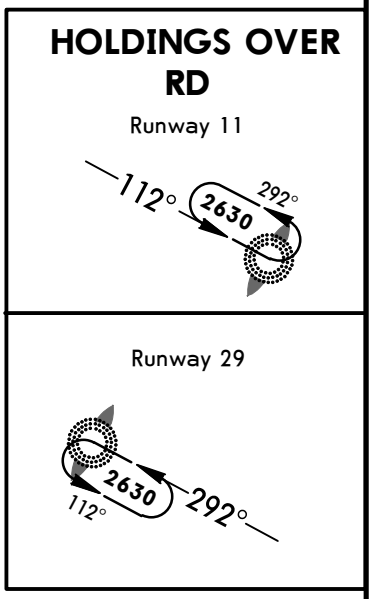

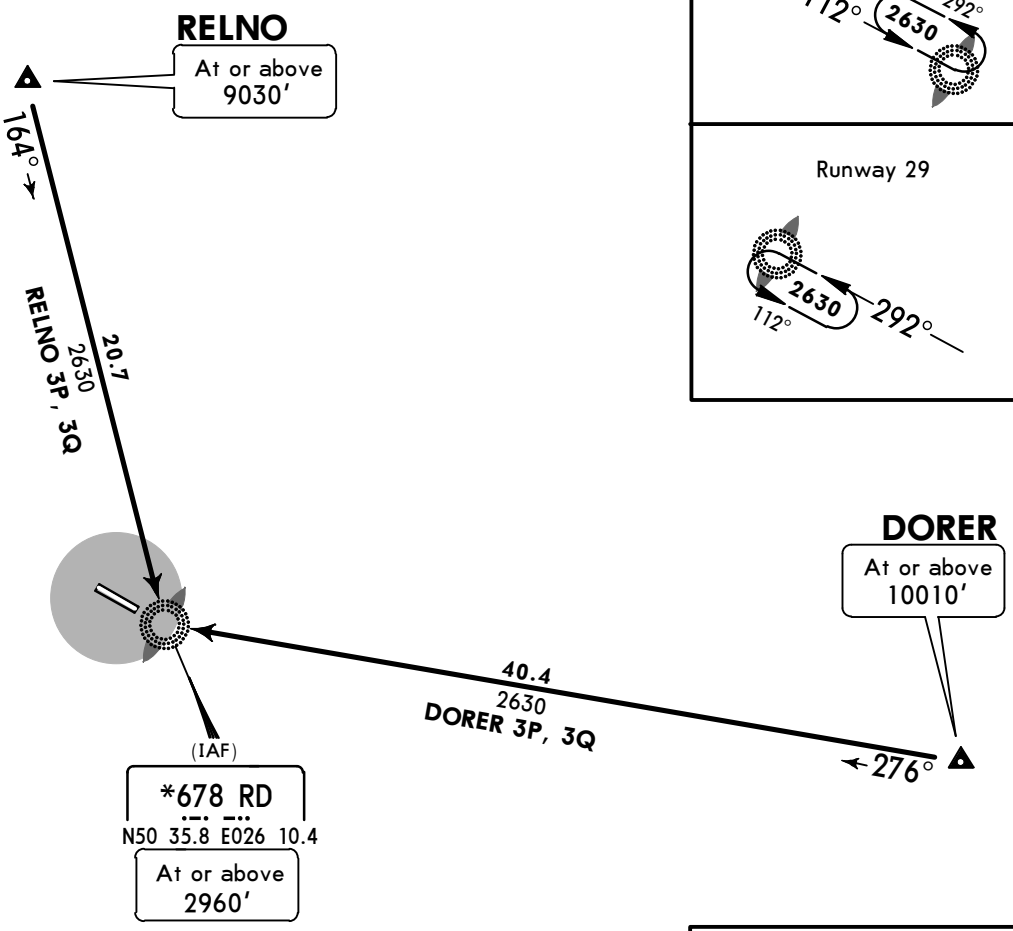

FT/METER CONVERSION
QNH

10010′	-	3050m
9030′	-	2750m
2960′	-	900m
2630′	-	800m

STAR	RWY	ROUTING
DORER 3P	11	On 276° bearing to RD.
DORER 3Q	29	On 276° bearing to RD.
RELNO 3P	11	On 164° bearing to RD.
RELNO 3Q	29	On 164° bearing to RD.

CHANGES: Chart reindexed; tempo stamp removed.

© JEPPESEN, 2017. ALL RIGHTS RESERVED.

Printed from JeppView for Windows 5.3.0.0 on 20 Jan 2021; Terminal chart data cycle 02-2021; Notice: After 04 Feb 2021, 0000Z, this chart may no longer be valid

Apt Elev 755′

Alt Set: hPa Trans level: By ATC Trans alt: 10010′

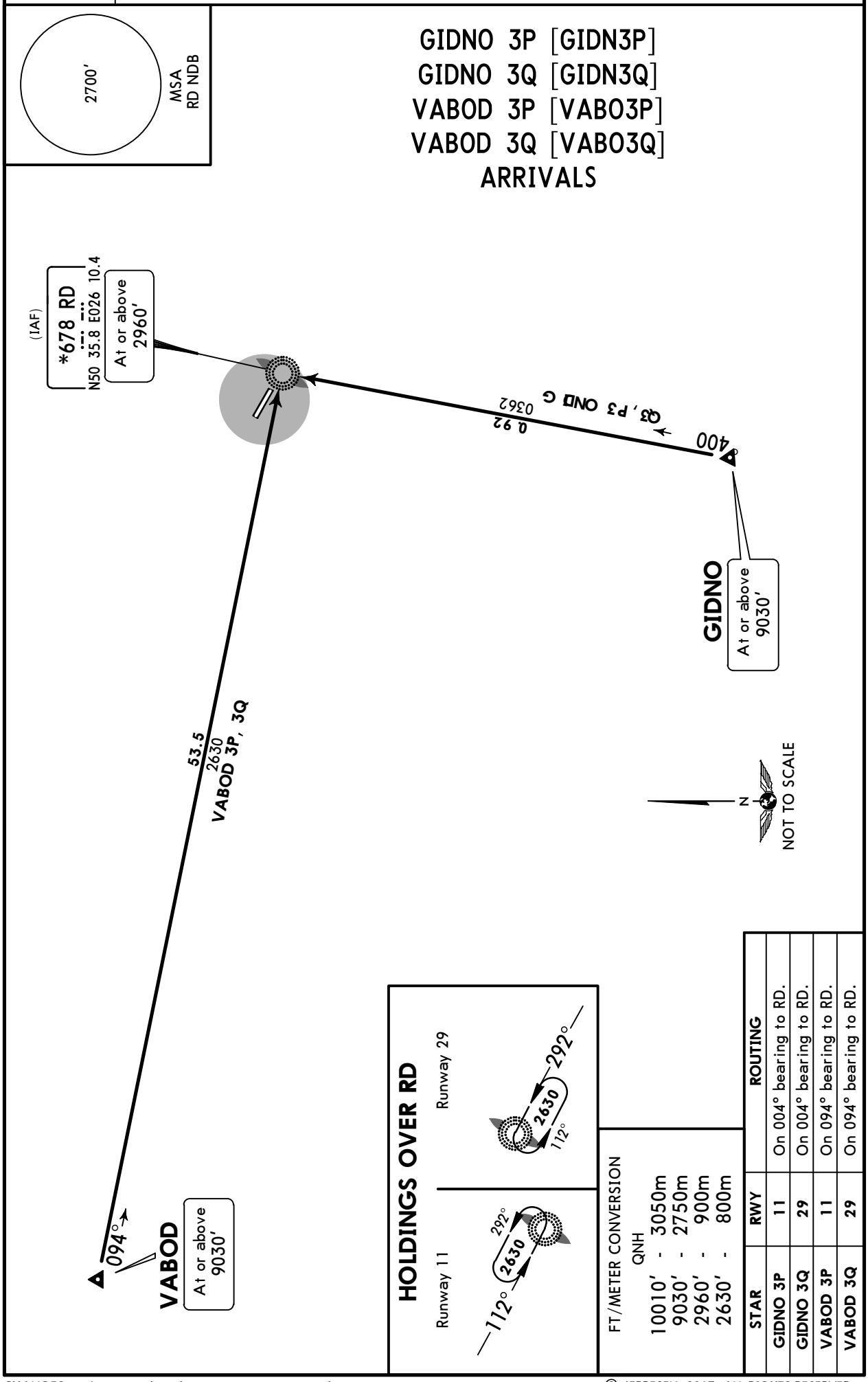

STAR	RWY	ROUTING
GIDNO 3P	11	On 004° bearing to RD.
GIDNO 3Q	29	On 004° bearing to RD.
VABOD 3P	11	On 094° bearing to RD.
VABOD 3Q	29	On 094° bearing to RD.

CHANGES: Chart reindexed; tempo stamp removed.

© JEPPESEN, 2017. ALL RIGHTS RESERVED.

Printed from JeppView for Windows 5.3.0.0 on 20 Jan 2021; Terminal chart data cycle 02-2021; Notice: After 04 Feb 2021, 0000Z, this chart may no longer be valid

Apt Elev	
755′	Trans level: By ATC Trans alt: 10010′ RWY 11: EXPECT close-in obstacles.

2700′
MSA
RD NDB

DORER 3K [DORE3K]
DORER 3M [DORE3M]
GIDNO 3K [GIDN3K]
GIDNO 3M [GIDN3M]
DEPARTURES

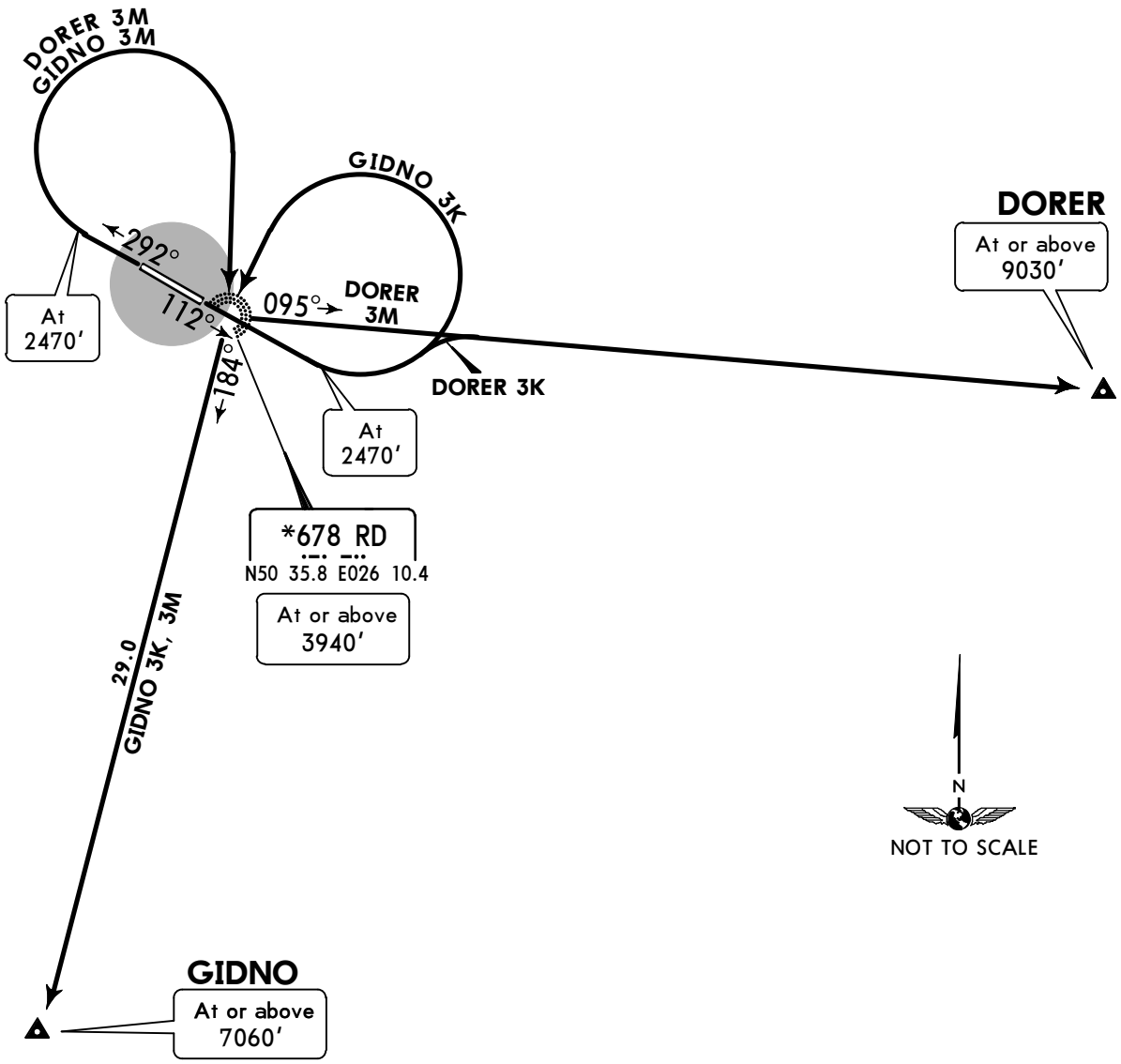

FT/METER CONVERSION
QNH

2470′	-	750m
3940′	-	1200m
7060′	-	2150m
9030′	-	2750m
10010′	-	3050m

SID	RWY	ROUTING
DORER 3K	11	Climb on 112° track to 2470′, turn LEFT, intercept 095° bearing from RD to DORER.
DORER 3M	29	Climb on 292° track to 2470′, turn RIGHT to RD, turn LEFT, intercept 095° bearing from RD to DORER.
GIDNO 3K	11	Climb on 112° track to 2470′, turn LEFT to RD, turn LEFT, 184° track to GIDNO.
GIDNO 3M	29	Climb on 292° track to 2470′, turn RIGHT to RD, turn RIGHT, 184° track to GIDNO.

CHANGES: Chart reindexed; tempo stamp removed.

© JEPPESEN, 2017. ALL RIGHTS RESERVED.

Printed from JeppView for Windows 5.3.0.0 on 20 Jan 2021; Terminal chart data cycle 02-2021; Notice: After 04 Feb 2021, 0000Z, this chart may no longer be valid

Apt Elev	
755′	Trans level: By ATC Trans alt: 10010′ RWY 11: EXPECT close-in obstacles.

2700′
MSA
RD NDB

RELNO 3K [RELN3K]
RELNO 3M [RELN3M]
VABOD 3K [VABO3K]
VABOD 3M [VABO3M]
DEPARTURES

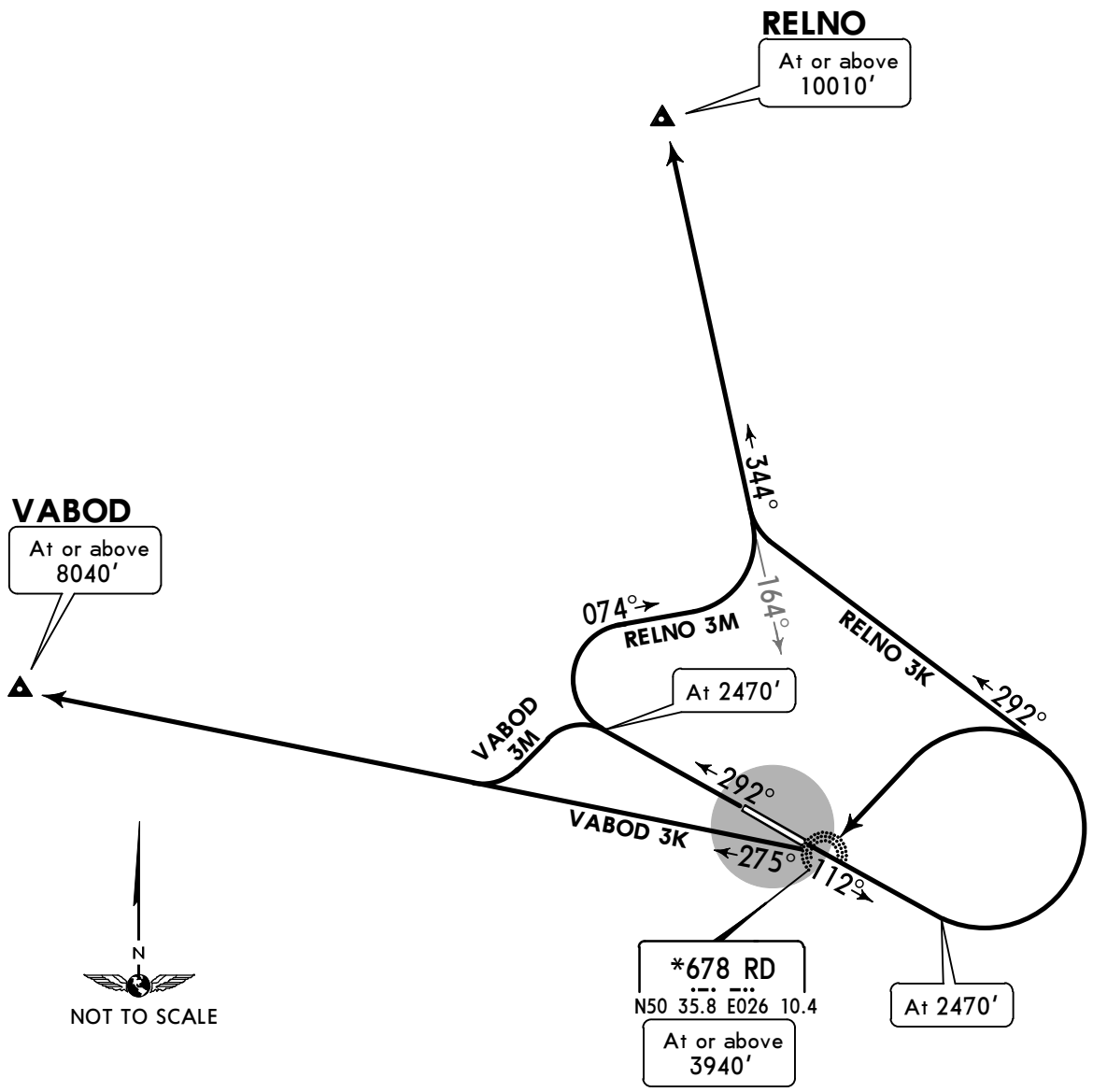

FT/METER CONVERSION
QNH

2470′	-	750m
3940′		1200m
8040′	-	2450m
10010′	-	3050m

SID	RWY	ROUTING
RELNO 3K	**11**	Climb on 112° track to 2470′, turn LEFT, 292° track, turn RIGHT, intercept 344° bearing from RD to RELNO.
RELNO 3M	**29**	Climb on 292° track to 2470′, turn RIGHT, 074° track, turn LEFT, intercept 344° bearing from RD to RELNO.
VABOD 3K	**11**	Climb on 112° track to 2470′, turn LEFT to RD, turn RIGHT, 275° track to VABOD.
VABOD 3M	**29**	Climb on 292° track to 2470′, turn LEFT, intercept 275° bearing from RD to VABOD.

CHANGES: Chart reindexed; tempo stamp removed.

© JEPPESEN, 2017. ALL RIGHTS RESERVED.

Printed from JeppView for Windows 5.3.0.0 on 20 Jan 2021; Terminal chart data cycle 02-2021; Notice: After 04 Feb 2021, 0000Z, this chart may no longer be valid

UKLR/RWN

Apt Elev **755′**
N50 36.5 E026 08.4

JEPPESEN

24 JAN 20 (10-9) **Eff 30 Jan**

RIVNE, UKRAINE

RIVNE INTL.

*RIVNE Tower

123.7

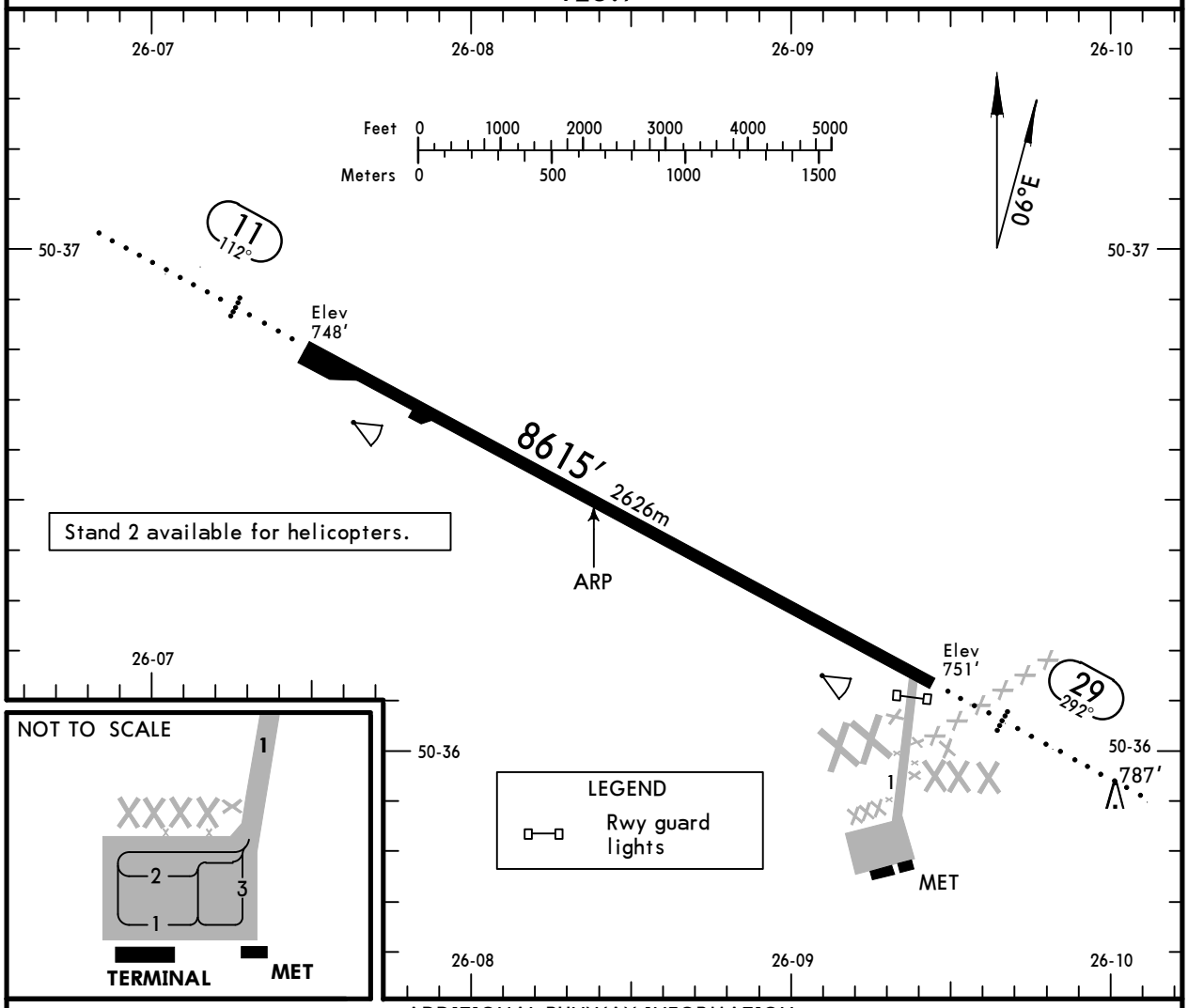

ADDITIONAL RUNWAY INFORMATION

RWY					USABLE LENGTHS LANDING BEYOND Threshold	Glide Slope	TAKE-OFF	WIDTH
11	RL (60m)	ALS	PAPI-L (angle 2.70°)	RVR	❶		8123′ 2476m	138′ 42m
29	RL (60m)	ALS	PAPI-L (angle 3.00°)	RVR				

❶ LDA 8123′ (2476m)

Standard

TAKE-OFF

	Low Visibility Take-off Day: RL & RCLM Night: RL	Day: RL or RCLM Night: RL	Adequate vis ref (Day only)
A B C D	RVR 300m	400m	500m

(CIO) Close-in obstacle: 787′ petrol station 0.4NM (809m) in front of THR Rwy 29.

CHANGES: Apt name. ALS depiction. PAPI angle. RVR and guard lights added.

© JEPPESEN, 1999, 2020. ALL RIGHTS RESERVED.

Printed from JeppView for Windows 5.3.0.0 on 20 Jan 2021; Terminal chart data cycle 02-2021; Notice: After 04 Feb 2021, 0000Z, this chart may no longer be valid

UKLR/RWN
RIVNE

JEPPESEN
4 AUG 17 (16-1) Eff 17 Aug

RIVNE, UKRAINE
NDB Rwy 11

BRIEFING STRIP ™

*RIVNE Tower
123.7

NDB RD *678	Final Apch Crs 112°	With DME Minimum Alt D5.0 1970′(1222′)	With DME DA/MDA(H) 1120′(372′)	Apt Elev 755′
		W/o DME Minimum Alt No FAF	W/o DME MDA(H) 1270′(522′)	Rwy 748′

2700′
MSA RD NDB

MISSED APCH: Climb on 112° to 2470′, then turn RIGHT to RD NDB climbing to 2960′, then according to chart.

Alt Set: hPa | Rwy Elev: 27 hPa | Trans level: By ATC | Trans alt: 10010′

DME required for FAF and SDF determination.

FT/METER CONVERSION
QNH

10010′ -	3050m
2960′ -	900m
2470′ -	750m
2300′ -	700m
1970′ -	600m

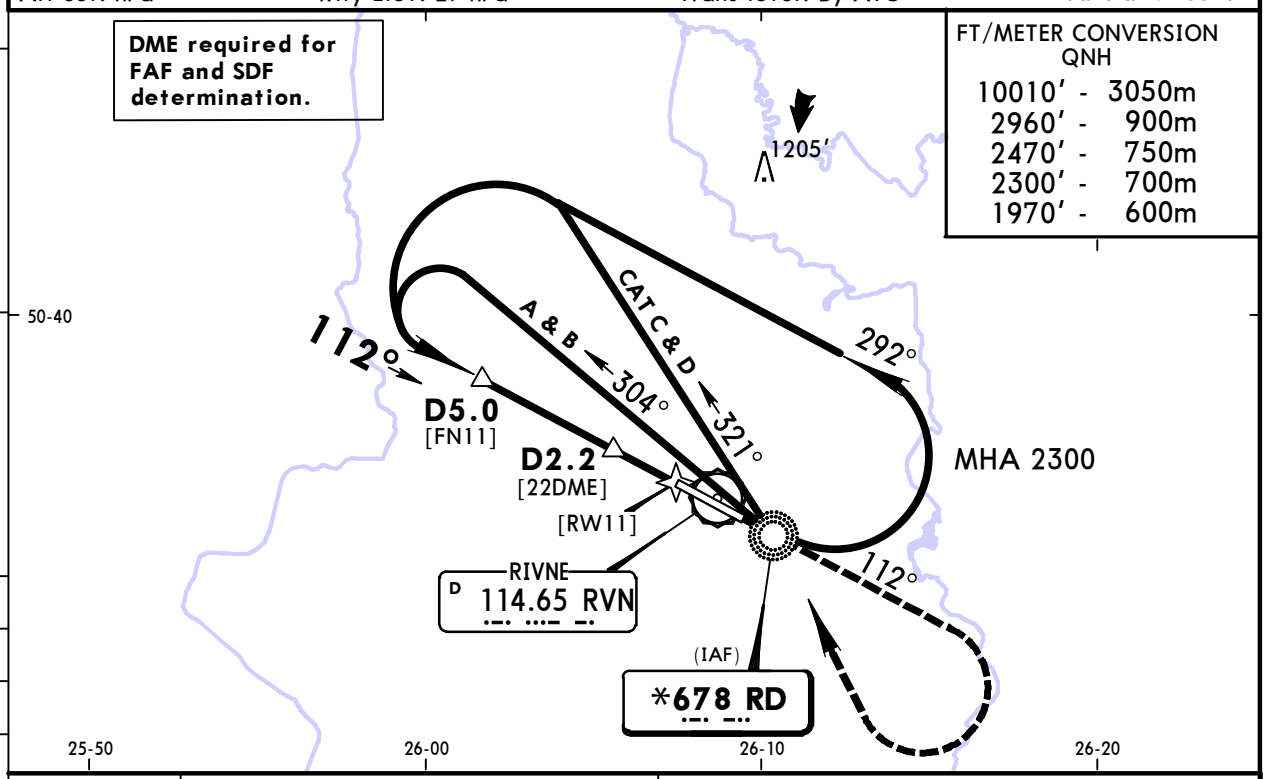

Dist to RW11	3.0	2.0
ALTITUDE	1870′	1510′

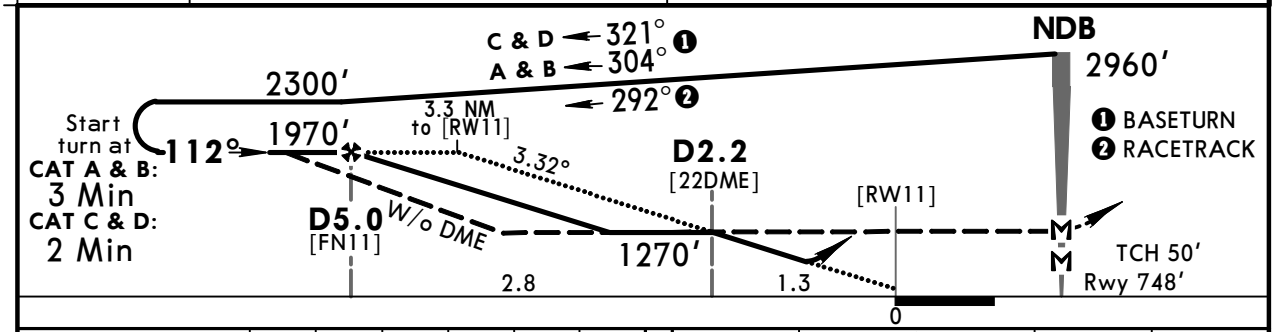

Gnd speed-Kts		70	90	100	120	140	160
Descent Angle	3.32°	411	529	587	705	822	940
MAP at NDB							

ALS PAPI | 2470′ on 112° | 2960′ RT | RD 678

Standard STRAIGHT-IN LANDING RWY 11

	with DME CDFA DA/MDA(H) 1120′(372′)		w/o DME non-CDFA MDA(H) 1270′(522′)	
		ALS out		ALS out
A	RVR 1500m	RVR 1500m	RVR 2400m	RVR 2600m
B				
C		RVR 1700m	RVR 2600m	RVR 2800m
D				

CIRCLE-TO-LAND

Max Kts	MDA(H)	VIS
100	1280′(525′) ❶	1500m
135	1280′(525′) ❶	1600m
180	1360′(605′) ❶	2400m
205	1460′(705′)	3600m

PANS OPS

❶ or higher straight-in minimums

CHANGES: Procedure. Minimums.

© JEPPESEN, 2016, 2017. ALL RIGHTS RESERVED.

Printed from JeppView for Windows 5.3.0.0 on 20 Jan 2021; Terminal chart data cycle 02-2021; Notice: After 04 Feb 2021, 0000Z, this chart may no longer be valid

UKLR/RWN
RIVNE

JEPPESEN
4 AUG 17 (16-2) Eff 17 Aug

RIVNE, UKRAINE
NDB Rwy 29

BRIEFING STRIP

*RIVNE Tower
123.7

NDB RD *678	Final Apch Crs 292°	With DME Minimum Alt D4.8 2140′(1389′)	With DME DA/MDA(H) 1120′(369′)	Apt Elev 755′ Rwy 751′
		W/o DME Minimum Alt No FAF	W/o DME MDA(H) 1370′(619′)	

2700′
MSA RD NDB

MISSED APCH: Climb on 292° to 2470′, then turn RIGHT to RD NDB climbing to 2960′, then according to chart.

Alt Set: hPa | Rwy Elev: 27 hPa | Trans level: By ATC | Trans alt: 10010′

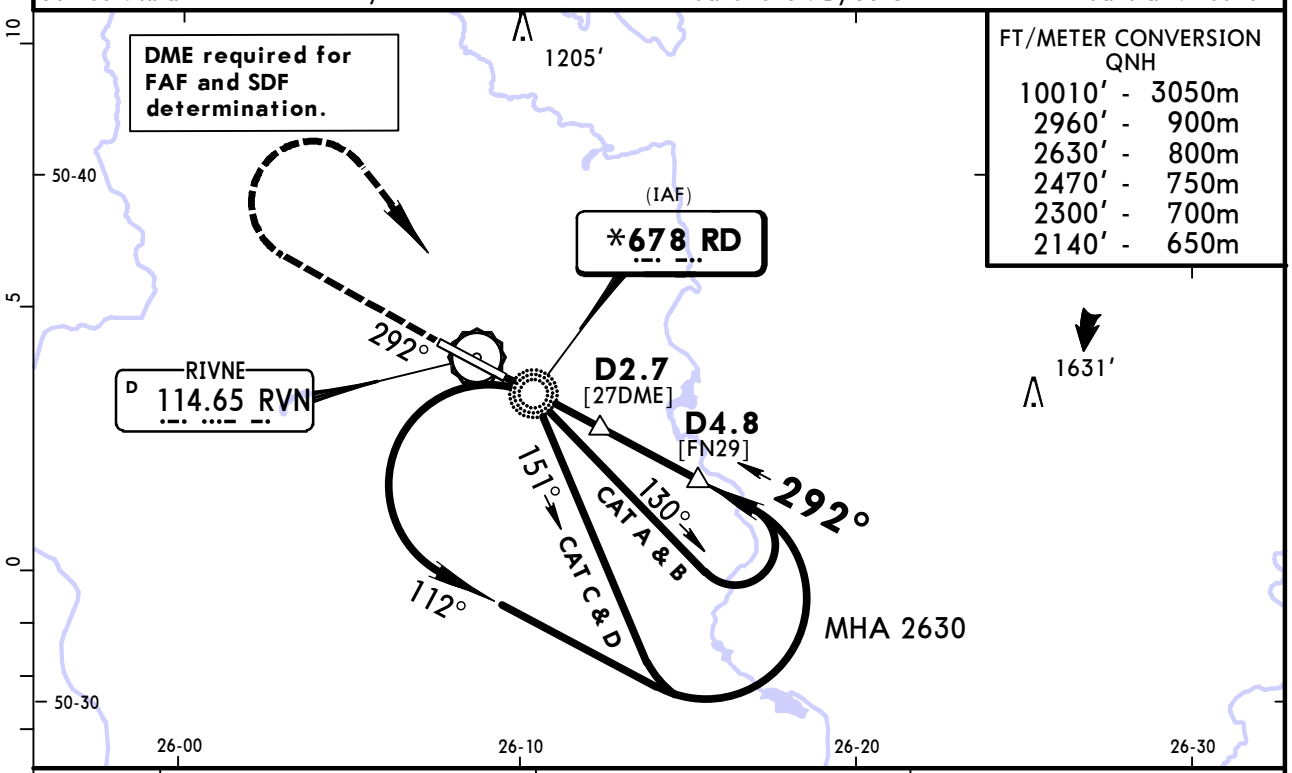

DIST to NDB	1.0	2.0	3.0
ALTITUDE	1350′	1670′	1990′

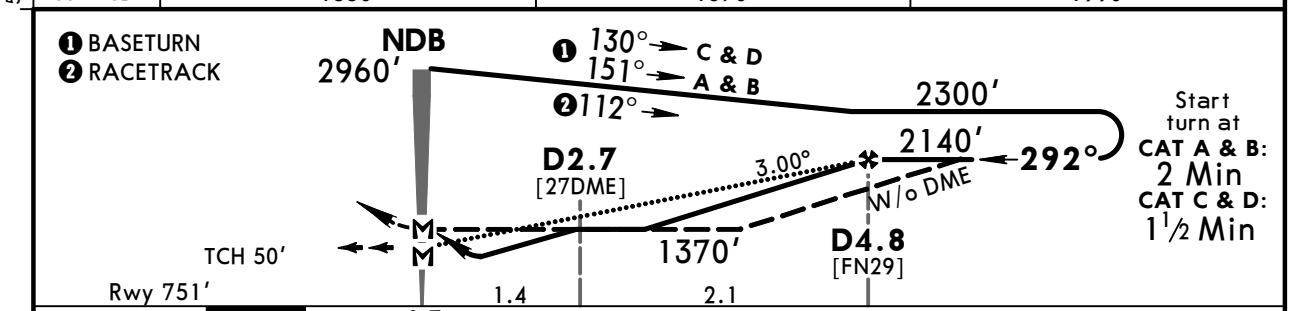

Gnd speed-Kts		70	90	100	120	140	160
Descent Angle	3.00°	372	478	531	637	743	849
MAP at NDB							

ALS PAPI | 2470′ on 292° | 2960′ RT | RD 678

Standard STRAIGHT-IN LANDING RWY 29

	with DME CDFA DA/MDA(H) 1120′(369′)		w/o DME non-CDFA MDA(H) 1370′(619′)	
		ALS out		ALS out
A	RVR 1500m	RVR 1500m	RVR 2800m	RVR 3000m
B				
C		RVR 1700m	RVR 3000m	RVR 3200m
D				

CIRCLE-TO-LAND

Max Kts	MDA(H)	VIS
100	1370′(615′)	❶ 1500m
135	1370′(615′)	❶ 1600m
180	1360′(605′)	❶ 2400m
205	1460′(705′)	3600m

PANS OPS

❶ or higher straight-in minimums

CHANGES: Procedure. Minimums.

© JEPPESEN, 2016, 2017. ALL RIGHTS RESERVED.

(c) JEPPESEN SANDERSON, INC., 2021, ALL RIGHTS RESERVED

JEPPESEN
JeppView for Windows

Chart changes since cycle 01-2021

ADD = added chart, REV = revised chart, DEL = deleted chart.

ACT	PROCEDURE IDENT	INDEX	REV DATE	EFF DATE

RIVNE, (RIVNE INTL - UKLR)

(c) JEPPESEN SANDERSON, INC., 2021, ALL RIGHTS RESERVED

TERMINAL CHART CHANGE NOTICES

Chart Change Notices for Airport UKLR

Type: Terminal
Effectivity: Permanent
Begin Date: 20181108
End Date: No end date

Airport name changed from Rivne to Rivne Intl.