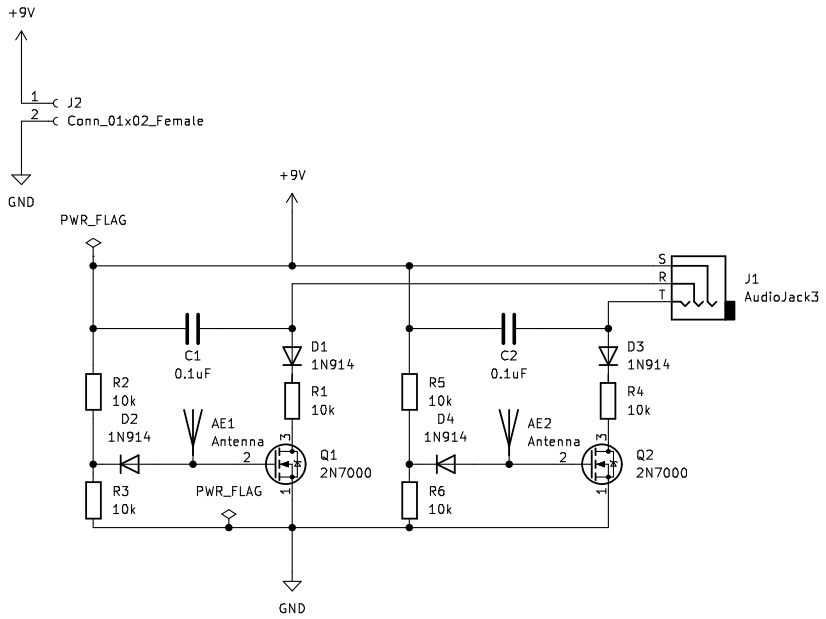

Sheet: /
File: electrophone.kicad_sch

Title: Electrophone

Size: A4	Date:	**Rev:**
KiCad E.D.A. kicad 6.0.7-f9a2dced07~116~ubuntu20.04.1		Id: 1/1