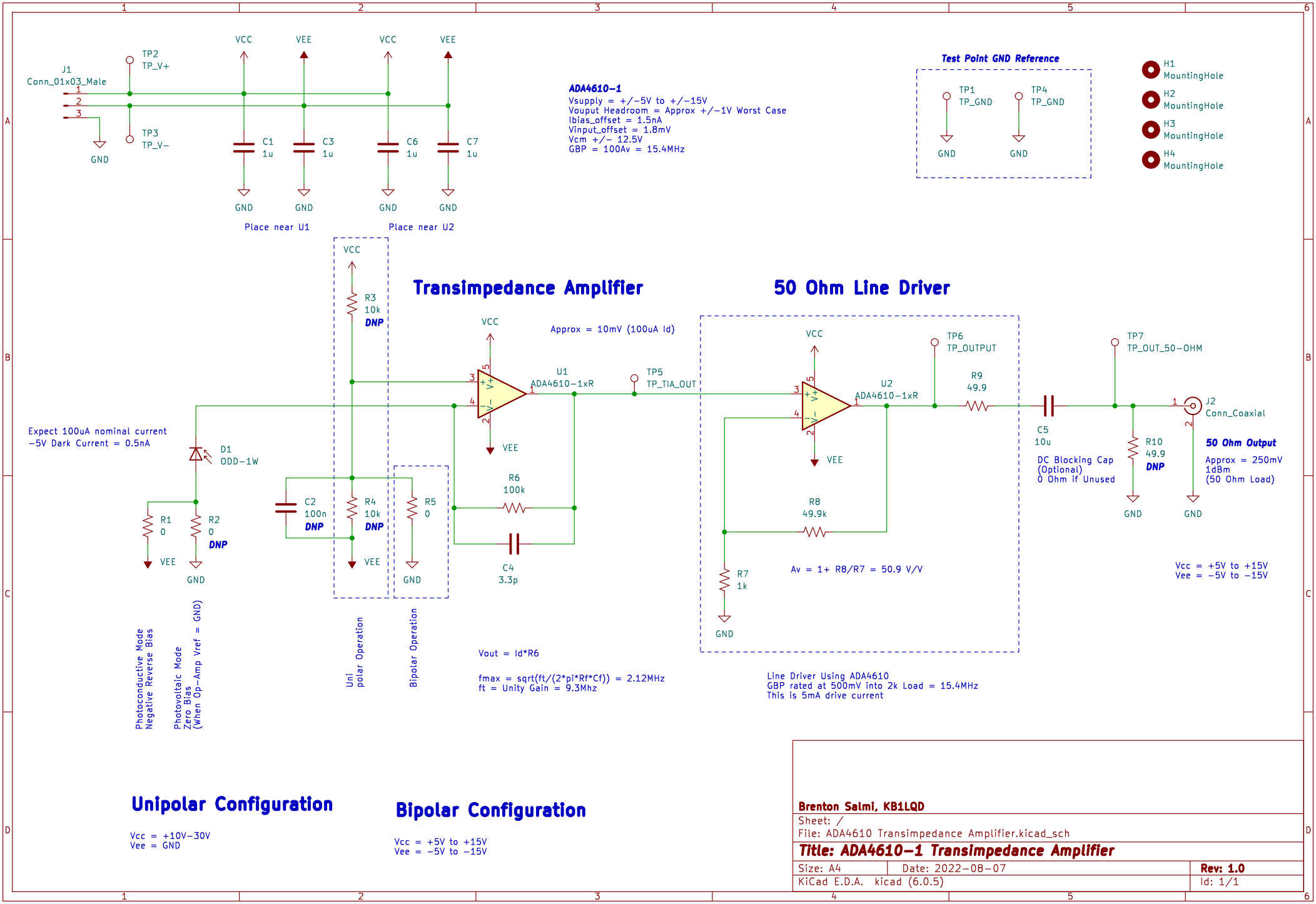
J1
Conn_01x03_Male
TP2
TP_V+
TP3
TP_V−
GND
VCC
VEE
C1
1u
C3
1u
C6
1u
C7
1u
Place near U1
Place near U2
ADA4610−1
Vsupply = +/−5V to +/−15V
Vouput Headroom = Approx +/−1V Worst Case
Ibias_offset = 1.5nA
Vinput_offset = 1.8mV
Vcm +/− 12.5V
GBP = 100Av = 15.4MHz
Test Point GND Reference
TP1
TP_GND
TP4
TP_GND
H1
MountingHole
H2
MountingHole
H3
MountingHole
H4
MountingHole
Transimpedance Amplifier
R3
10k
DNP
Approx = 10mV (100uA Id)
U1
ADA4610−1xR
TP5
TP_TIA_OUT
Expect 100uA nominal current
−5V Dark Current = 0.5nA
D1
ODD−1W
R1
0
R2
0
DNP
C2
100n
DNP
R4
10k
DNP
R5
0
R6
100k
C4
3.3p
Photoconductive Mode
Negative Reverse Bias
Photovoltaic Mode
Zero Bias
(When Op−Amp Vref = GND)
Uni
polar Operation
Bipolar Operation
Vout = Id*R6
fmax = sqrt(ft/(2*pi*Rf*Cf)) = 2.12MHz
ft = Unity Gain = 9.3Mhz
50 Ohm Line Driver
TP6
TP_OUTPUT
U2
ADA4610−1xR
R9
49.9
R8
49.9k
R7
1k
Av = 1+ R8/R7 = 50.9 V/V
Line Driver Using ADA4610
GBP rated at 500mV into 2k Load = 15.4MHz
This is 5mA drive current
TP7
TP_OUT_50−OHM
C5
10u
DC Blocking Cap
(Optional)
0 Ohm if Unused
R10
49.9
DNP
J2
Conn_Coaxial
50 Ohm Output
Approx = 250mV
1dBm
(50 Ohm Load)
Vcc = +5V to +15V
Vee = −5V to −15V
Unipolar Configuration
Vcc = +10V−30V
Vee = GND
Bipolar Configuration
Vcc = +5V to +15V
Vee = −5V to −15V
Brenton Salmi, KB1LQD
Sheet: /
File: ADA4610 Transimpedance Amplifier.kicad_sch
Title: ADA4610−1 Transimpedance Amplifier
Size: A4
Date: 2022−08−07
Rev: 1.0
KiCad E.D.A. kicad (6.0.5)
Id: 1/1