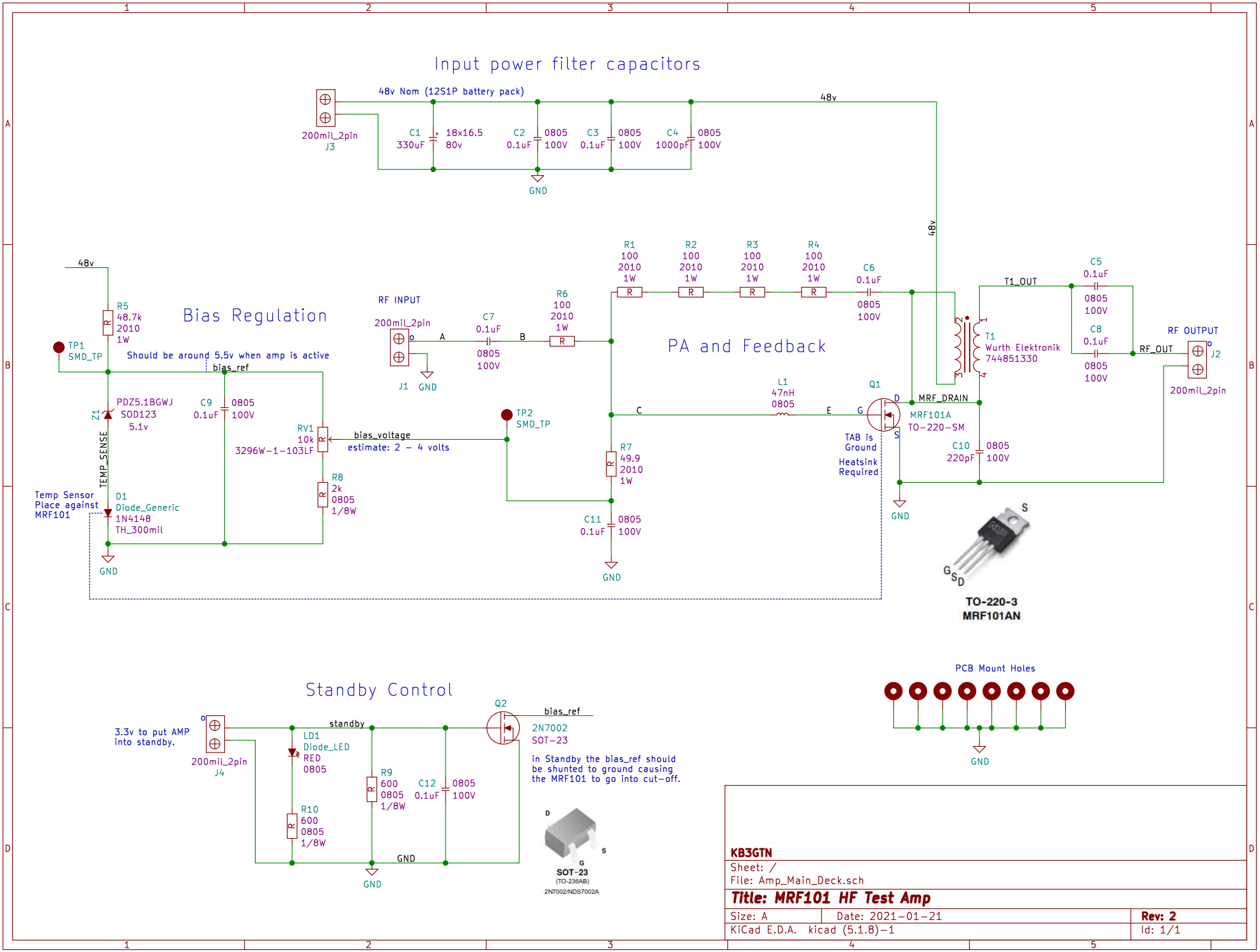

KB3GTN

Sheet: /

File: Amp_Main_Deck.sch

Title: MRF101 HF Test Amp

Size: A	Date: 2021-01-21	**Rev: 2**
KiCad E.D.A. kicad (5.1.8)-1		Id: 1/1