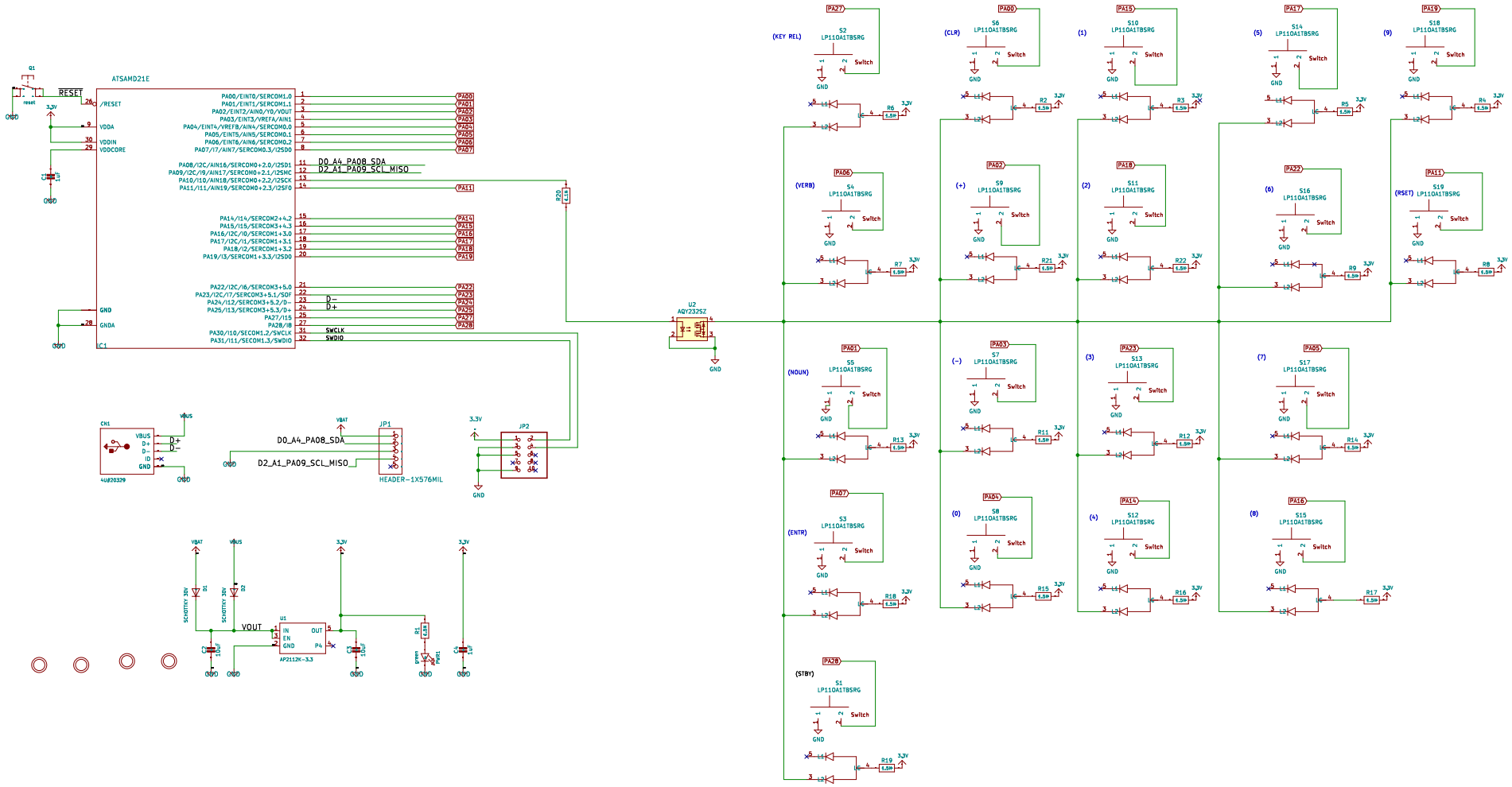

DSKY-matic Project	
Sheet: /	
File: DSKY_keyboard.sch	
Title: DSKY Keyboard Replica	
Size: C	Date: 2020-08-16
KiCad E.D.A. kicad (5.1.5)-3	Rev: V3
	Id: 1/1