Results for LTB ICT and ACMI Calibration: NSLSII-INS-PRC001

Procedure Performed on 2/05/2026 by Anthony Caracappa and Kato Bouthsarath

Analysis Performed on 2/09/2026 by Anthony Caracappa

Setup Parameters for All Measurements		
Oscilloscope	Manufacturer	Tektronix
	Model Number	MSO64B
	Serial Number	B027138
	Calibration Expiration	12/30/2025
Fast HV Pulser	Manufacturer	HP
	Model Number	8114A
	Serial Number	3330 G 00691
	Calibration Expiration	*See Note 1
Gate / Delay Generator	Manufacturer	SRS
	Model Number	DG645
	Serial Number	003099
	Calibration Expiration	4/23/2026
Spectrum Analtzer	Manufacturer	Rohde & Schwarz
	Model Number	FWS50
	Serial Number	101986
	Calibration Expiration	10/30/2025
6dB Attenuator	Manufacturer	Minicircuits
	Model Number	VAT-6+
	Attenuation @ 20MHz	-6.0304dB
	Attenuation @ 50MHz	-5.9892dB
	Attenuation @ 100MHz	-6.0058dB
Splitter /Combiner	Manufacturer	Minicircuits
	Model Number	ZFSC-2-1W-S+
Personnel	Cognizant Engineer	Anthony Caracappa
	Trained Assistant	Kato Bouthsarath
Input Files	ICT Ratio	ACMIspare_.raw
	ACMI Calibration	ACMIsparePos_.raw
	Inverted Polarity	ACMIspareNeg.raw
	Calibration Verification	ACMIspare_Ver.txt
Output Files	ACMI Report	Spare2026.pdf

*Note 1: The HP8114A HV Pulser is not used to perform any measurements in this procedure and therefore does not need to be calibrated. The pulses produced by this device are measured by the other calibrated devices listed above.

ACMI Power Supply Measurements		
5.10 VDC Power Supply	Voltage Measurement:	5.1109
	5.05 < V < 5.15 ?	PASS
-5.10 VDC Power Supply	Voltage Measurement:	-5.1132
	-5.15 < V < -5.05 ?	PASS
3.3 VDC Power Supply	Voltage Measurement:	3.3695
	3.20 < V < 3.50 ?	PASS
24 VDC Power Supply #1	Voltage Measurement:	24.149
	23.5 < V < 24.5 ?	PASS
24 VDC Power Supply #2	Voltage Measurement:	24.133
	23.5 < V < 24.5 ?	PASS
All Voltage Measurements were made with the following device:		
Digital Multimeter	Manufacturer	Keithley
	Model Number	2100
	Serial Number	8020357
	Calibration Expiration	3/20/2025

Test Pulses Measurements for ICT Ratio				
Test Pulse Ampl (V)	Integral Avg (nVS)	Integral Std (nVS)	Charge Avg (nC)	Charge Std (nC)
1.0	50.52	0.23	1.01	0.0046
2.0	100.709	0.8504	2.014	0.017
3.0	151.293	0.4386	3.026	0.0088
4.0	201.593	0.642	4.032	0.0128
5.0	250.658	0.9452	5.013	0.0189
6.0	300.697	0.899	6.014	0.018
7.0	350.635	1.097	7.013	0.0219
8.0	402.951	1.134	8.059	0.0227
9.0	452.7	1.2703	9.054	0.0254
10.0	503.072	1.9166	10.061	0.0383
11.0	552.118	2.3996	11.042	0.048
12.0	601.986	1.9645	12.04	0.0393
13.0	652.112	2.119	13.042	0.0424
14.0	701.198	2.1319	14.024	0.0426
15.0	749.742	2.0994	14.995	0.042
16.0	805.052	1.761	16.101	0.0352
17.0	854.268	2.2237	17.085	0.0445
18.0	903.105	2.4362	18.062	0.0487
HP8114A Pulse Generator was setup to produce 50 nSec wide pulses at the indicated voltages. Pulses measured directly by the MSO64B Scope with sample rate 3.125GS/S and an ADC resolution of 14-bits.				
The average and standard deviation are based on 25 repeated measurements made by the MSO64B Scope for each amplitude setting.				

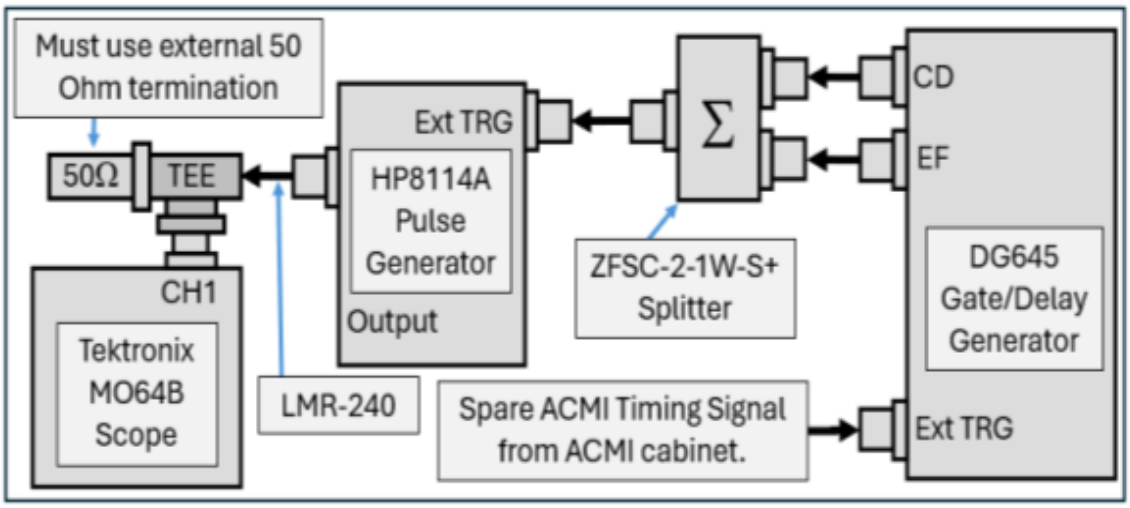

Output Pulses Measurements for ICT Ratio				
Test Pulse Ampl (V)	Integral Avg (nVS)	Integral Std (nVS)	Charge Avg (nC)	Charge Std (nC)
1.0	1.241	0.0094	0.025	0.0002
2.0	2.477	0.018	0.05	0.0004
3.0	3.723	0.0192	0.074	0.0004
4.0	4.956	0.018	0.099	0.0004
5.0	6.199	0.0288	0.124	0.0006
6.0	7.435	0.0248	0.149	0.0005
7.0	8.664	0.0177	0.173	0.0004
8.0	9.956	0.0276	0.199	0.0005
9.0	11.178	0.0516	0.224	0.001
10.0	12.424	0.0589	0.248	0.0012
11.0	13.628	0.033	0.273	0.0007
12.0	14.89	0.0485	0.298	0.001
13.0	16.105	0.0523	0.322	0.001
14.0	17.337	0.0576	0.347	0.0012
15.0	18.537	0.0565	0.371	0.0011
16.0	19.859	0.063	0.397	0.0013
17.0	21.101	0.0527	0.422	0.0011
18.0	22.314	0.0516	0.446	0.001
HP8114A Pulse Generator was setup to produce 50 nSec wide pulses at the indicated voltages. ICT Output Pulses measured directly by the MSO64B Scope with sample rate of 3.125GS/S and an ADC resolution of 14-bits.				
The average and standard deviation are based on 25 repeated measurements made by the MSO64B Scope for each amplitude setting.				

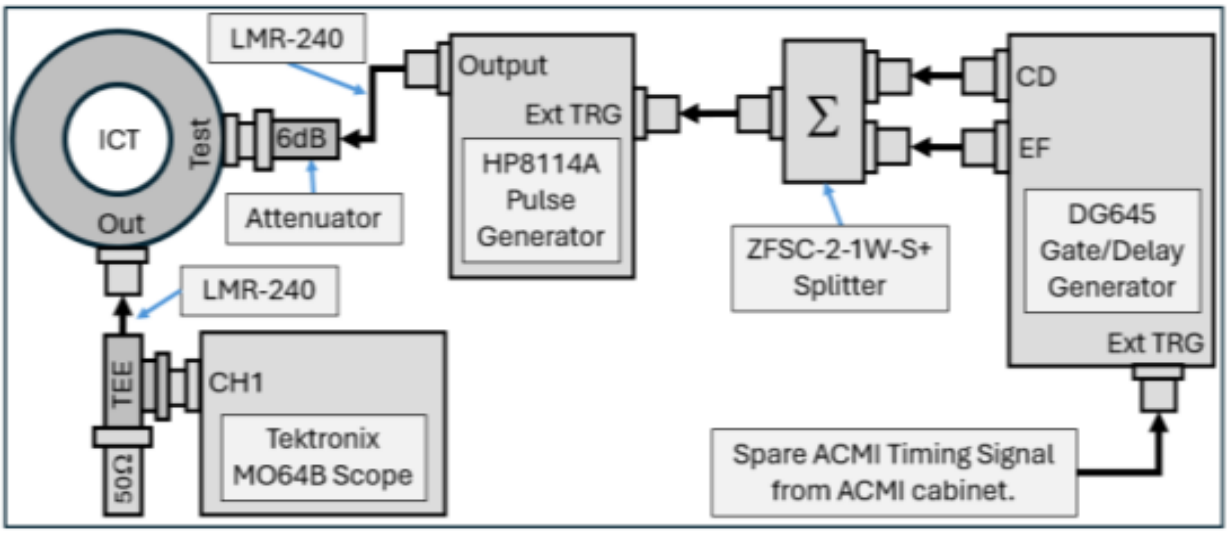

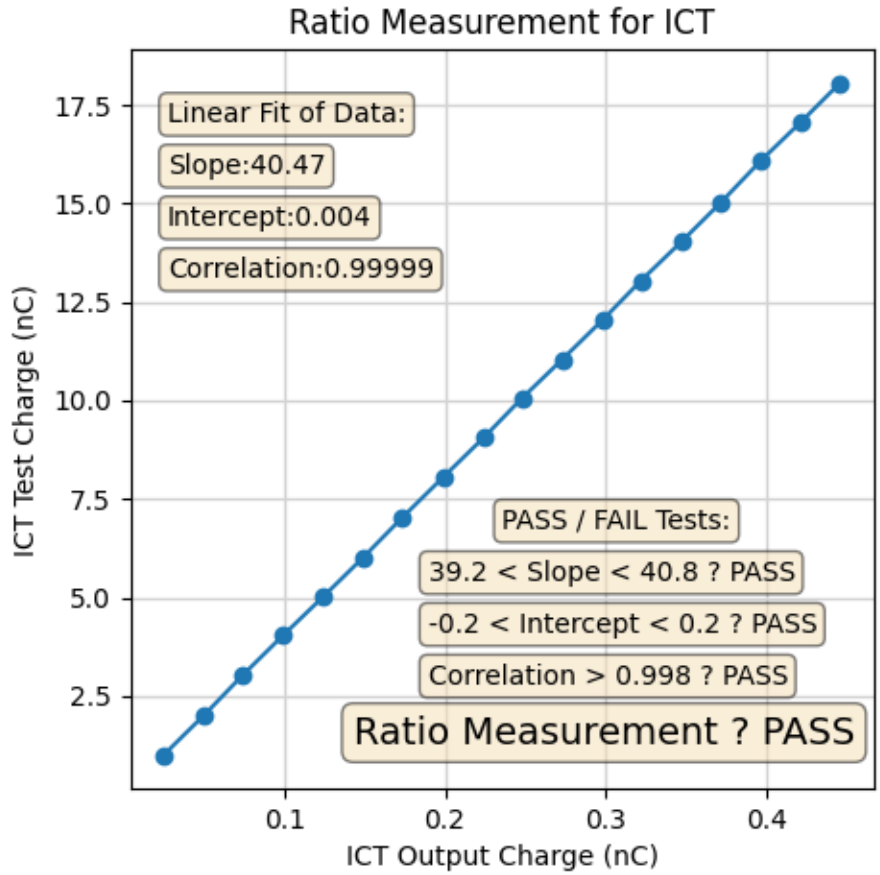
Ratio Measurement for ICT
Linear Fit of Data:
Slope:40.47
Intercept:0.004
Correlation:0.99999
PASS / FAIL Tests:
39.2 < Slope < 40.8 ? PASS
-0.2 < Intercept < 0.2 ? PASS
Correlation > 0.998 ? PASS
Ratio Measurement ? PASS
ICT Test Charge (nC)
ICT Output Charge (nC)
17.5
15.0
12.5
10.0
7.5
5.0
2.5
0.1
0.2
0.3
0.4

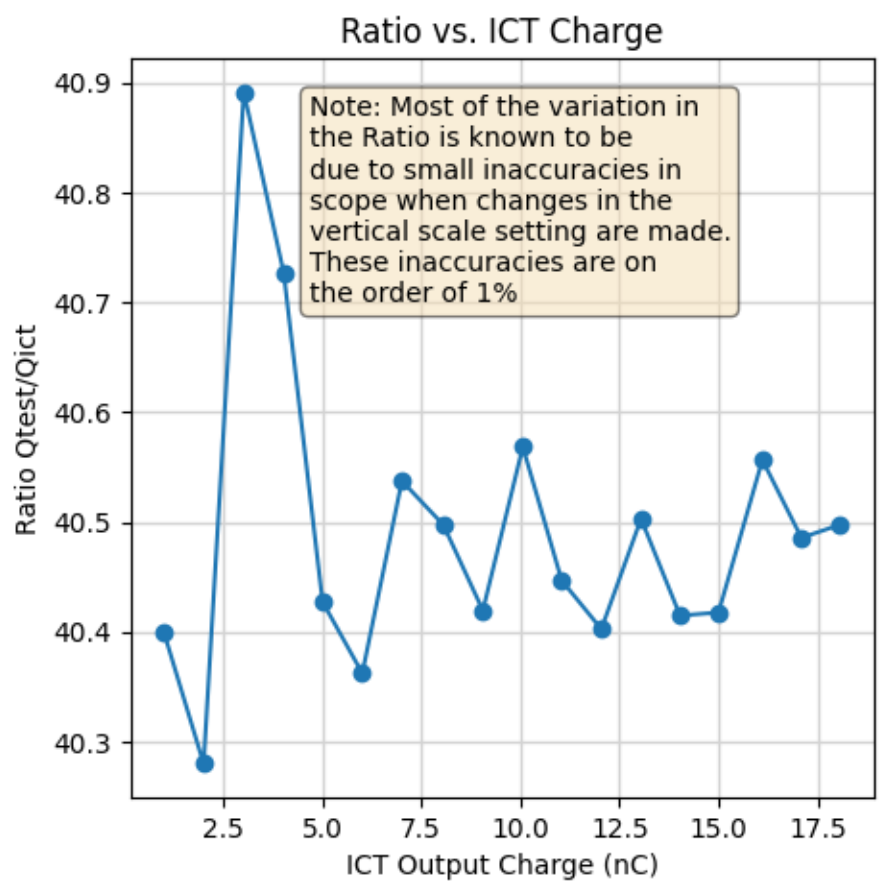
Ratio vs. ICT Charge
Note: Most of the variation in the Ratio is known to be due to small inaccuracies in scope when changes in the vertical scale setting are made. These inaccuracies are on the order of 1%
Ratio Qtest/Qict
ICT Output Charge (nC)
40.9
40.8
40.7
40.6
40.5
40.4
40.3
2.5
5.0
7.5
10.0
12.5
15.0
17.5

Measurements for ICT Qin and Qout		
Qin (nC)	Qout (nC)	Ratio (Qin/Qout)
1.01	0.025	40.4
2.014	0.05	40.28
3.026	0.074	40.892
4.032	0.099	40.727
5.013	0.124	40.427
6.014	0.149	40.362
7.013	0.173	40.538
8.059	0.199	40.497
9.054	0.224	40.42
10.061	0.248	40.569
11.042	0.273	40.447
12.04	0.298	40.403
13.042	0.322	40.503
14.024	0.347	40.415
14.995	0.371	40.418
16.101	0.397	40.557
17.085	0.422	40.486
18.062	0.446	40.498

Test Pulses Measurements for ACMI Calibration				
Test Pulse Ampl (V)	Integral Avg (nVS)	Integral Std (nVS)	Charge Avg (nC)	Charge Std (nC)
1.0	50.256	0.22	1.005	0.0044
2.0	99.721	0.8639	1.994	0.0173
3.0	150.154	0.2324	3.003	0.0046
4.0	200.406	1.0032	4.008	0.0201
5.0	250.01	0.8765	5.0	0.0175
6.0	299.926	1.1725	5.999	0.0234
7.0	349.628	0.6912	6.993	0.0138
8.0	401.716	0.7247	8.034	0.0145
9.0	450.424	1.0016	9.008	0.02
10.0	499.966	4.3999	9.999	0.088
11.0	547.837	3.2599	10.957	0.0652
12.0	598.381	3.3818	11.968	0.0676
13.0	649.519	4.228	12.99	0.0846
14.0	696.56	4.0622	13.931	0.0813
15.0	747.736	4.4528	14.955	0.0891
16.0	800.796	3.925	16.016	0.0785
17.0	850.466	4.0085	17.009	0.0802
18.0	902.609	3.2239	18.052	0.0645
19.0	943.7	7.5121	18.874	0.1502
20.0	992.764	4.1465	19.855	0.0829
21.0	1043.295	7.6477	20.866	0.153
22.0	1093.067	5.9535	21.861	0.1191
23.0	1142.891	6.4325	22.858	0.1286
HP8114A Pulse Generator was setup to produce 50 nSec wide pulses at the indicated voltages. Pulses measured directly by the MSO64B Scope with sample rate 3.125GS/S and an ADC resolution of 14-bits.				
The average and standard deviation are based on 10 repeated measurements made by the MSO64B Scope for each amplitude setting.				

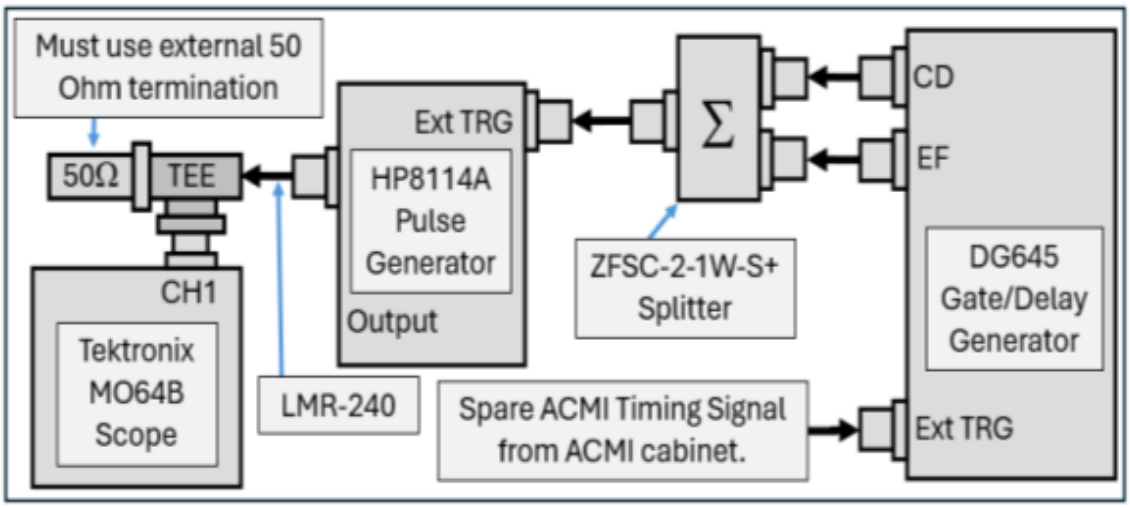

ADC Measurements from ACMI for Normal Beam Polarity							
Test Pulse (Volts)	Qin (nC)	Beam		Self Test (A-B)		Self Test (B-A)	
		ADCA	ADCB	ADCA	ADCB	ADCA	ADCB
1	1.005	105.9	7.6	103.8	6.6	3.0	105.3
2	1.994	198.6	7.2	201.5	7.2	0.0	203.2
3	3.003	300.4	4.1	298.2	4.4	3.3	301.8
4	4.008	399.2	4.3	393.6	7.9	1.9	398.4
5	5.0	495.9	5.9	492.9	7.2	1.0	493.6
6	5.999	592.6	4.6	586.9	4.8	4.7	591.2
7	6.993	688.7	6.1	684.7	7.1	4.2	683.8
8	8.034	788.7	4.8	782.2	4.4	2.6	785.2
9	9.008	887.1	10.4	876.4	8.4	2.6	877.4
10	9.999	979.1	6.6	970.8	6.6	2.2	971.7
11	10.957	1073.9	7.2	1062.1	5.8	2.6	1064.2
12	11.968	1164.9	4.9	1155.0	6.9	5.4	1157.6
13	12.99	1257.8	8.2	1247.4	4.8	3.4	1245.4
14	13.931	1348.8	5.6	1338.2	7.3	2.5	1337.2
15	14.955	1441.1	7.6	1426.1	5.0	2.0	1424.1
16	16.016	1540.0	4.5	1529.6	9.4	0.2	1522.7
17	17.009	1632.2	8.1	1618.4	7.8	0.7	1613.8
18	18.052	1719.6	4.8	1706.8	7.8	-0.6	1701.3
19	18.874	1811.0	8.1	1792.9	6.6	1.9	1792.1
20	19.855	1898.2	7.2	1880.5	4.4	1.4	1878.5
21	20.866	1984.5	5.2	1966.0	6.8	4.0	1966.4
22	21.861	2047.0	7.4	2046.8	5.2	1.1	2044.8
23	22.858	2047.0	3.1	2047.0	5.1	1.1	2047.0

HP8114A Pulse Generator was setup to produce 50 nSec wide pulses at the indicated voltages. Pulser connected to ICT Test Input. ICT Output connected to ACMI Input. ADC values read from ACMI PLC over network using Python script.

The averages are based on 16 repeated measurements made by the ACMI system for each amplitude setting of the HP8114A Pulse Generator.

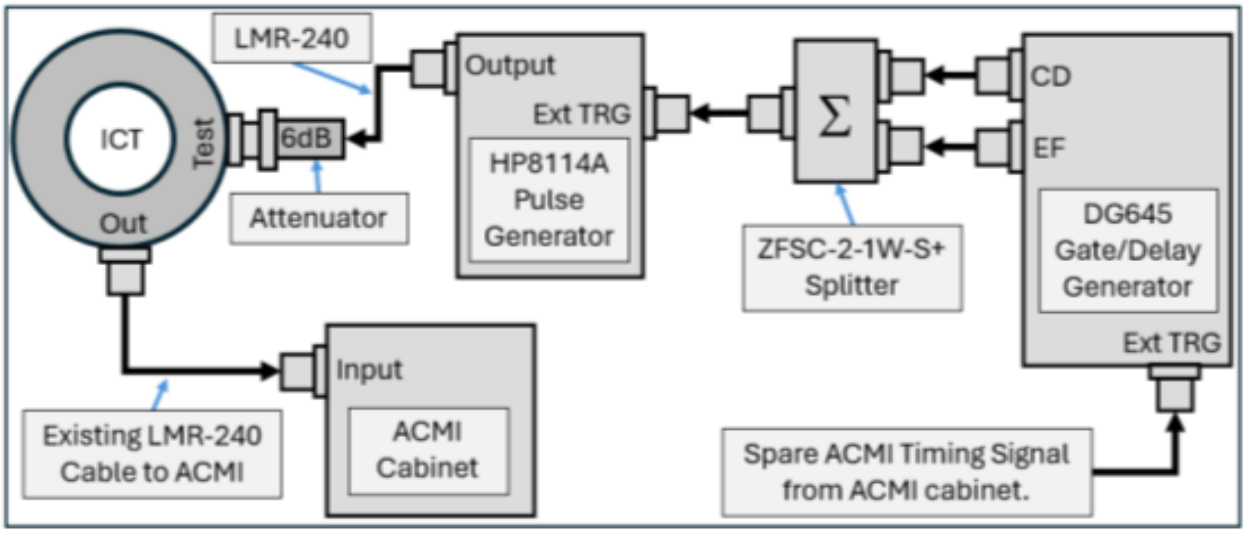

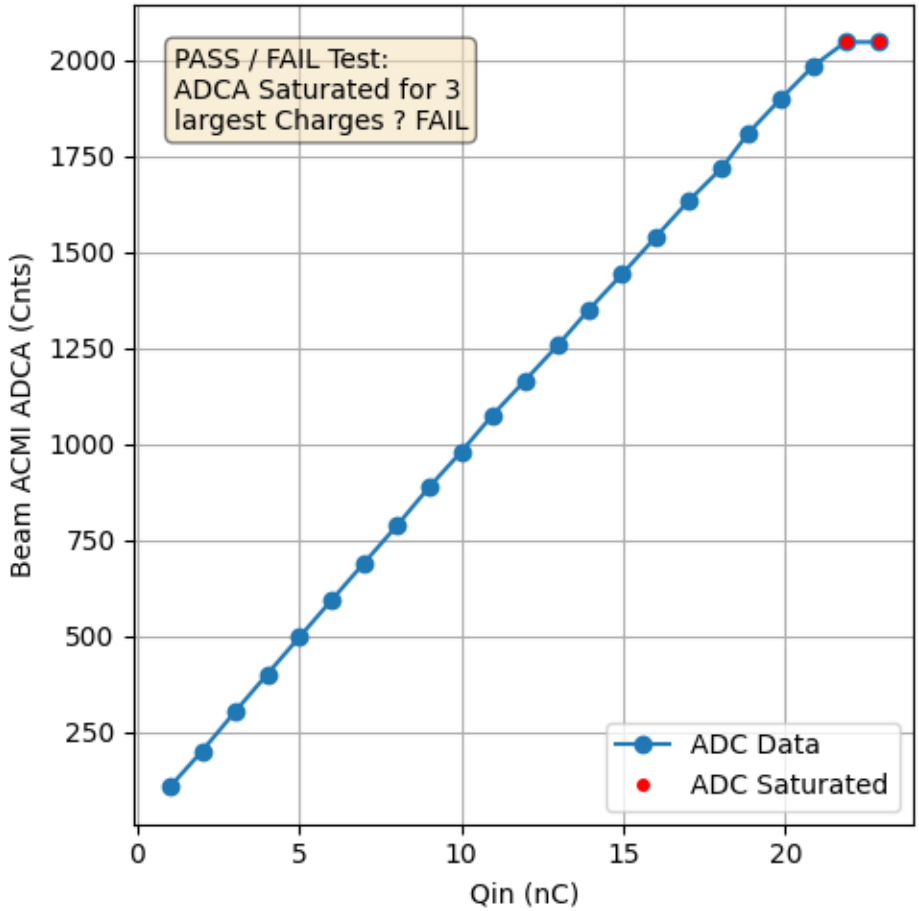
PASS / FAIL Test:
ADCA Saturated for 3
largest Charges ? FAIL
ADC Data
ADC Saturated
Beam ACMI ADCA (Cnts)
Qin (nC)
2000
1750
1500
1250
1000
750
500
250
0
5
10
15
20

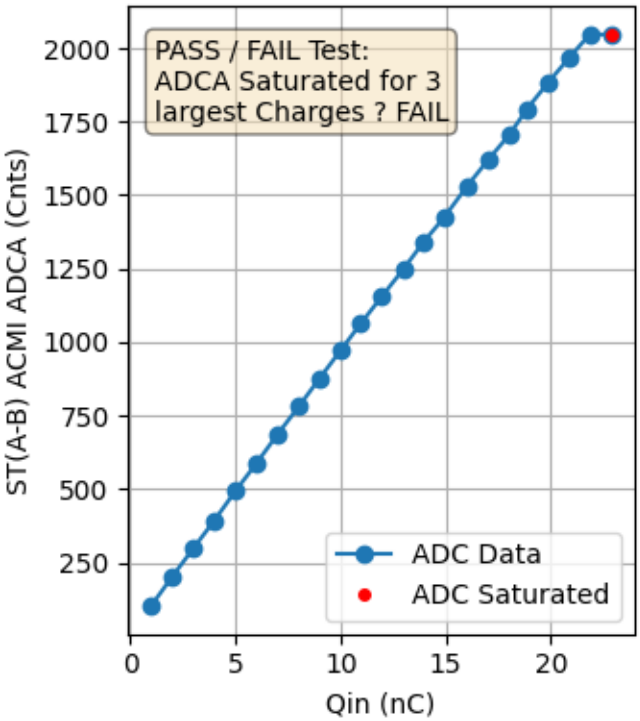
PASS / FAIL Test:
ADCA Saturated for 3
largest Charges ? FAIL
ADC Data
ADC Saturated
ST(A-B) ACMI ADCA (Cnts)
Qin (nC)
2000
1750
1500
1250
1000
750
500
250
0
5
10
15
20

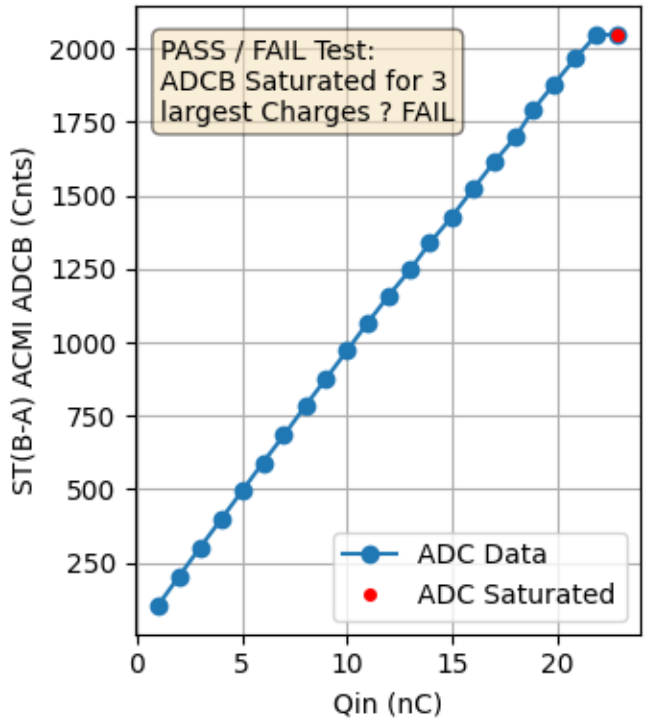
PASS / FAIL Test:
ADCB Saturated for 3
largest Charges ? FAIL
ADC Data
ADC Saturated
ST(B-A) ACMI ADCB (Cnts)
Qin (nC)
2000
1750
1500
1250
1000
750
500
250
0
5
10
15
20

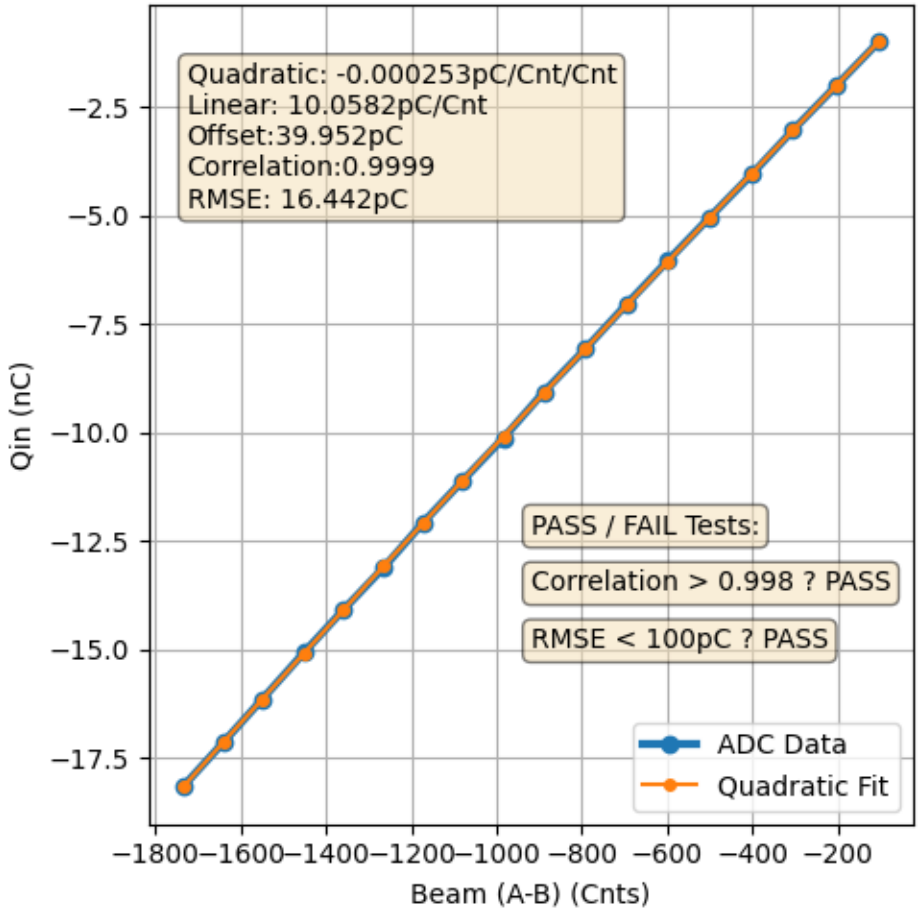
Quadratic: -0.000253pC/Cnt/Cnt
Linear: 10.0582pC/Cnt
Offset:39.952pC
Correlation:0.9999
RMSE: 16.442pC
PASS / FAIL Tests:
Correlation > 0.998 ? PASS
RMSE < 100pC ? PASS
ADC Data
Quadratic Fit
Qin (nC)
Beam (A-B) (Cnts)

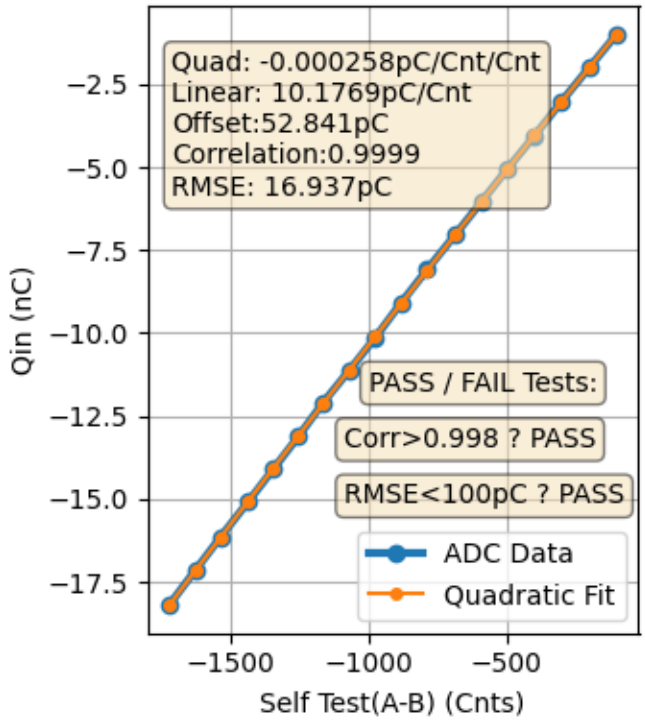
Quad: -0.000258pC/Cnt/Cnt
Linear: 10.1769pC/Cnt
Offset:52.841pC
Correlation:0.9999
RMSE: 16.937pC
PASS / FAIL Tests:
Corr>0.998 ? PASS
RMSE<100pC ? PASS
ADC Data
Quadratic Fit
Qin (nC)
Self Test(A-B) (Cnts)

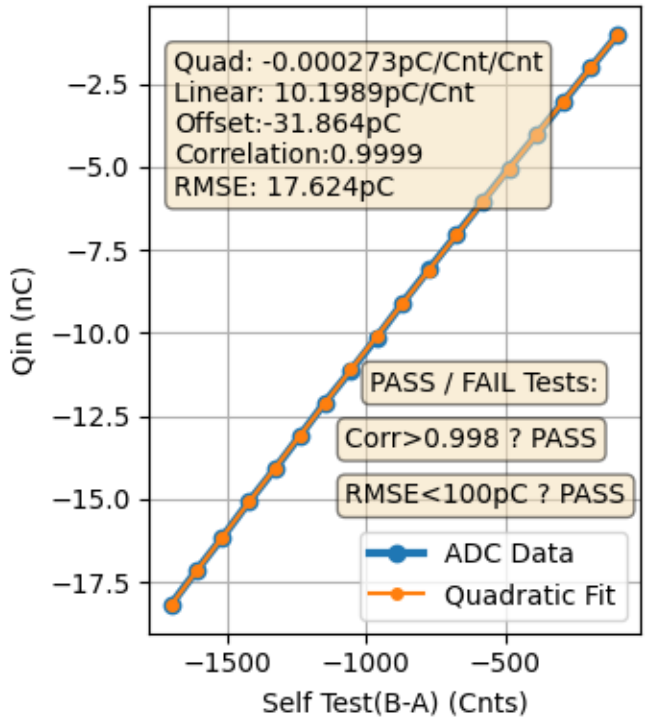
Quad: -0.000273pC/Cnt/Cnt
Linear: 10.1989pC/Cnt
Offset:-31.864pC
Correlation:0.9999
RMSE: 17.624pC
PASS / FAIL Tests:
Corr>0.998 ? PASS
RMSE<100pC ? PASS
ADC Data
Quadratic Fit
Qin (nC)
Self Test(B-A) (Cnts)

Test Pulses Measurements for Inverted Polarity				
Test Pulse Ampl (V)	Integral Avg (nVS)	Integral Std (nVS)	Charge Avg (nC)	Charge Std (nC)
-1.0	-50.824	0.4214	-1.016	0.0084
-2.0	-100.841	1.0353	-2.017	0.0207
-3.0	-152.193	0.9112	-3.044	0.0182
-4.0	-202.703	1.0663	-4.054	0.0213
-5.0	-252.368	1.4533	-5.047	0.0291
-6.0	-302.548	1.5323	-6.051	0.0307
-7.0	-352.289	1.635	-7.046	0.0327
-8.0	-404.665	2.0324	-8.093	0.0406
-9.0	-454.164	2.0279	-9.083	0.0406
-10.0	-506.712	2.9127	-10.134	0.0583
-11.0	-555.994	2.7534	-11.12	0.0551
-12.0	-604.569	3.7006	-12.091	0.074
-13.0	-655.793	2.7537	-13.116	0.0551
-14.0	-705.295	2.1828	-14.106	0.0437
-15.0	-753.774	2.5438	-15.075	0.0509
-16.0	-807.885	2.8038	-16.158	0.0561
-17.0	-857.397	2.2207	-17.148	0.0444
-18.0	-908.304	0.7725	-18.166	0.0154
-19.0	-958.24	10.2821	-19.165	0.2056
-20.0	-1007.945	8.1895	-20.159	0.1638
-21.0	-1059.944	10.1059	-21.199	0.2021
-22.0	-1110.382	9.0928	-22.208	0.1819
-23.0	-1161.663	9.8115	-23.233	0.1962

HP8114A Pulse Generator was setup to produce 50 nSec wide pulses at the indicated voltages. Pulses measured directly by the MSO64B Scope with sample rate 3.125GS/S and an ADC resolution of 14-bits.

The average and standard deviation are based on 25 repeated measurements made by the MSO64B Scope for each amplitude setting.

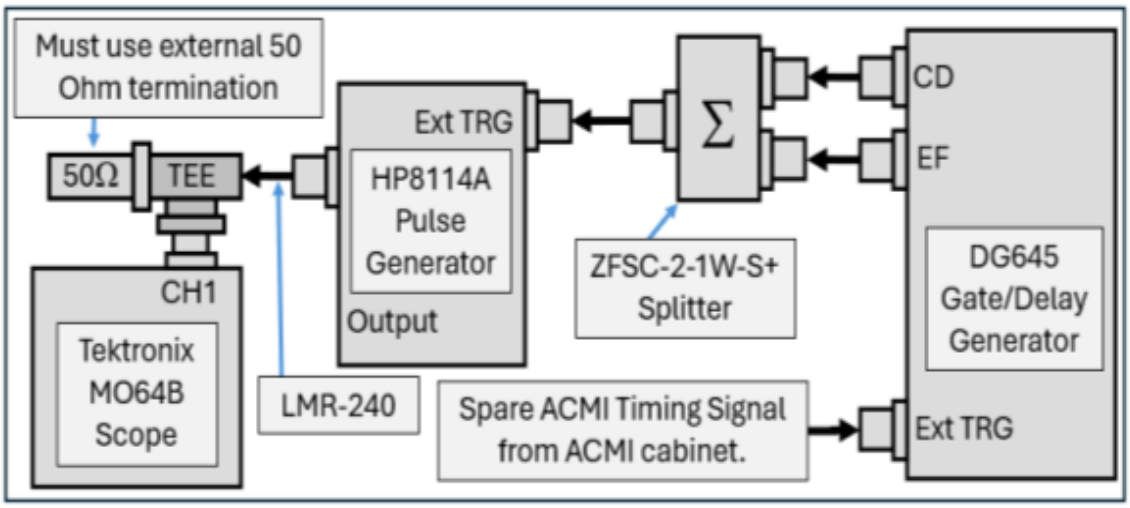

ADC Measurements from ACMI for Inverted Beam Polarity							
Test Pulse (Volts)	Qin (nC)	Beam		Self Test (A-B)		Self Test (B-A)	
		ADCA	ADCB	ADCA	ADCB	ADCA	ADCB
-1	-1.016	-99.0	5.4	-97.4	5.9	2.4	-93.7
-2	-2.017	-196.2	6.9	-196.1	6.3	1.4	-191.4
-3	-3.044	-299.9	4.9	-295.4	7.5	1.9	-289.3
-4	-4.054	-395.4	5.4	-391.8	6.6	2.0	-387.9
-5	-5.047	-494.2	5.6	-488.6	7.4	3.2	-484.9
-6	-6.051	-591.8	6.6	-585.0	6.2	2.4	-580.4
-7	-7.046	-687.0	7.2	-681.6	4.2	2.4	-674.1
-8	-8.093	-787.1	5.4	-780.2	6.9	2.7	-773.3
-9	-9.083	-884.6	5.1	-872.9	7.1	2.2	-866.2
-10	-10.134	-978.6	5.2	-968.2	5.9	0.7	-961.6
-11	-11.12	-1074.0	5.6	-1061.9	5.6	1.1	-1053.7
-12	-12.091	-1166.7	6.0	-1155.6	6.4	2.1	-1146.8
-13	-13.116	-1259.2	4.9	-1245.4	6.6	1.7	-1238.9
-14	-14.106	-1353.8	6.4	-1336.6	6.9	3.4	-1327.1
-15	-15.075	-1444.8	6.4	-1428.1	4.7	2.5	-1419.4
-16	-16.158	-1543.8	6.0	-1527.2	7.2	1.2	-1516.8
-17	-17.148	-1635.1	5.4	-1618.5	5.9	2.1	-1608.1
-18	-18.166	-1727.2	7.8	-1709.4	7.2	1.6	-1699.8
-19	-19.165	-1821.1	4.6	-1801.2	5.6	-0.5	-1789.5
-20	-20.159	-1911.3	7.1	-1889.5	4.2	2.8	-1879.1
-21	-21.199	-2000.1	5.7	-1977.9	5.6	1.2	-1967.9
-22	-22.208	-2048.0	5.5	-2048.0	3.8	1.1	-2047.9
-23	-23.233	-2048.0	6.8	-2048.0	6.2	2.2	-2048.0
HP8114A Pulse Generator was setup to produce 50 nSec wide pulses at the indicated voltages. Pulser connected to ICT Test Input. ICT Output connected to ACMI Input. ADC values read from ACMI PLC over network using Python script.							
The averages are based on 16 repeated measurements made by the ACMI system for each amplitude setting of the HP8114A Pulse Generator.							

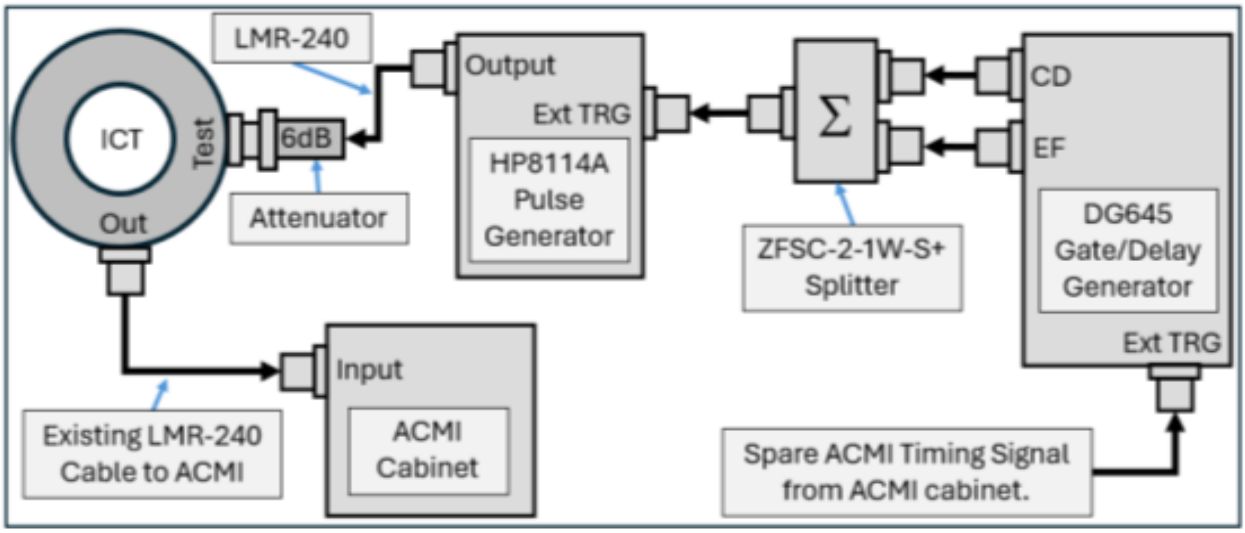

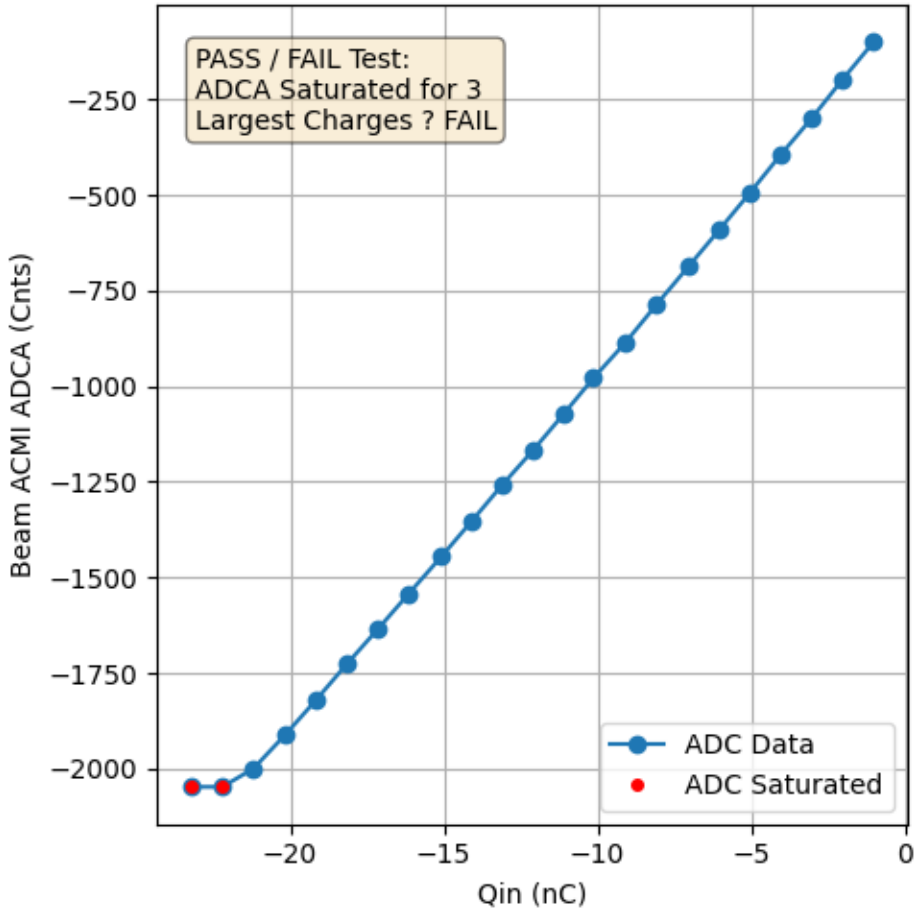
PASS / FAIL Test:
ADCA Saturated for 3
Largest Charges ? FAIL
ADC Data
ADC Saturated
Beam ACMI ADCA (Cnts)
Qin (nC)
−250
−500
−750
−1000
−1250
−1500
−1750
−2000
−20
−15
−10
−5
0

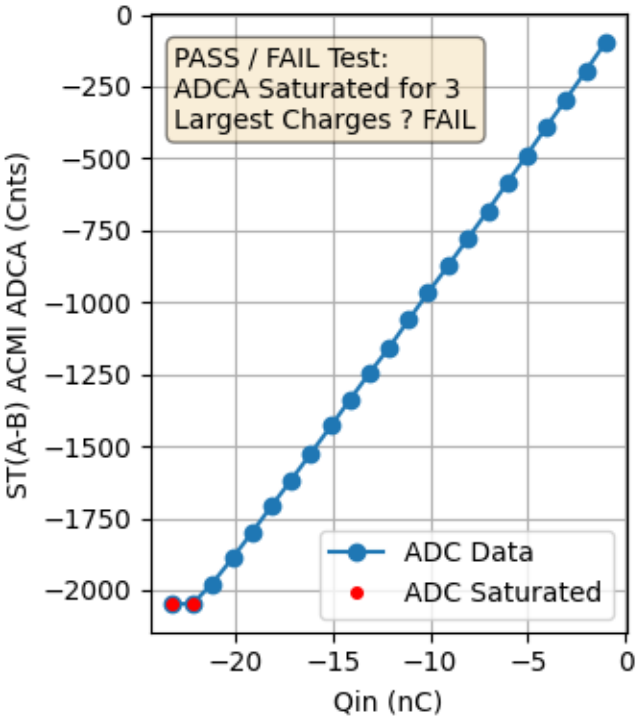
PASS / FAIL Test:
ADCA Saturated for 3
Largest Charges ? FAIL
ADC Data
ADC Saturated
ST(A-B) ACMI ADCA (Cnts)
Qin (nC)
0
−250
−500
−750
−1000
−1250
−1500
−1750
−2000
−20
−15
−10
−5
0

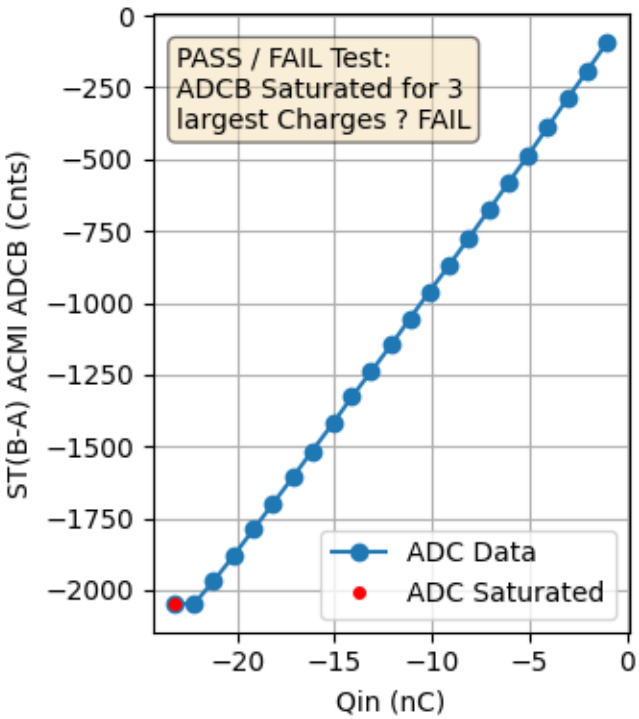
PASS / FAIL Test:
ADCB Saturated for 3
largest Charges ? FAIL
ADC Data
ADC Saturated
ST(B-A) ACMI ADCB (Cnts)
Qin (nC)
0
−250
−500
−750
−1000
−1250
−1500
−1750
−2000
−20
−15
−10
−5
0

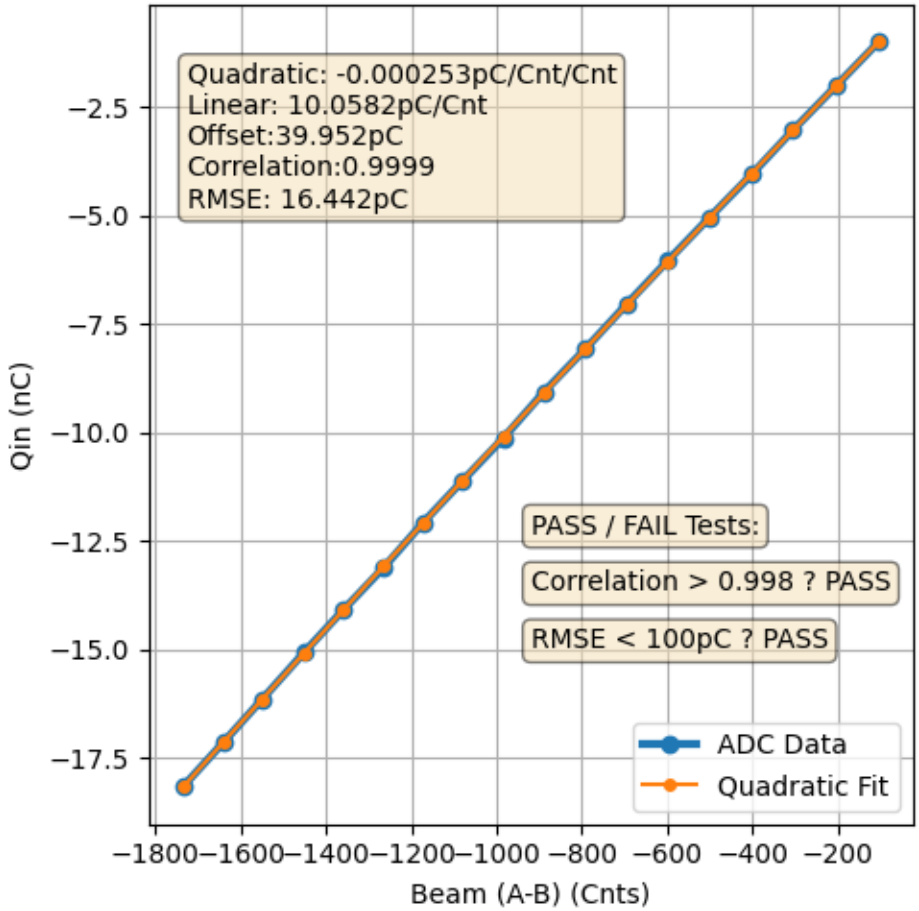
Quadratic: -0.000253pC/Cnt/Cnt
Linear: 10.0582pC/Cnt
Offset:39.952pC
Correlation:0.9999
RMSE: 16.442pC
PASS / FAIL Tests:
Correlation > 0.998 ? PASS
RMSE < 100pC ? PASS
ADC Data
Quadratic Fit
Qin (nC)
Beam (A-B) (Cnts)

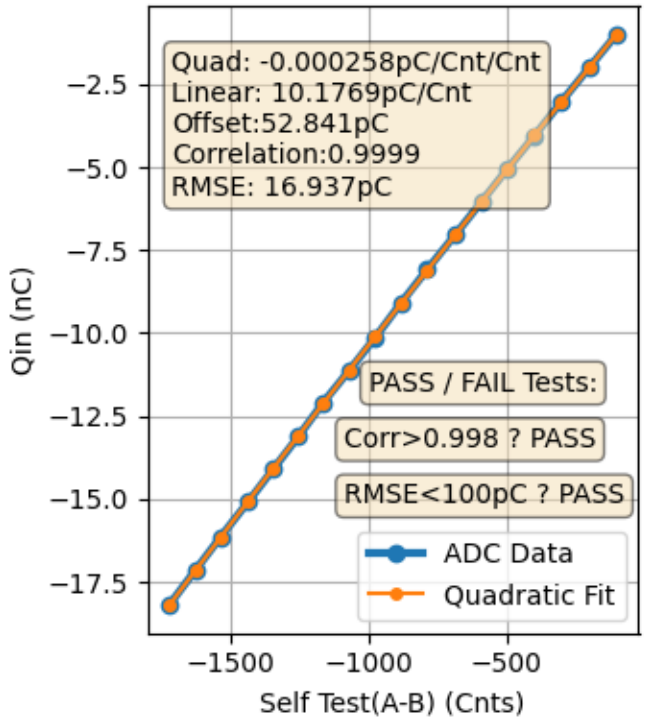
Quad: -0.000258pC/Cnt/Cnt
Linear: 10.1769pC/Cnt
Offset:52.841pC
Correlation:0.9999
RMSE: 16.937pC
PASS / FAIL Tests:
Corr>0.998 ? PASS
RMSE<100pC ? PASS
ADC Data
Quadratic Fit
Qin (nC)
Self Test(A-B) (Cnts)

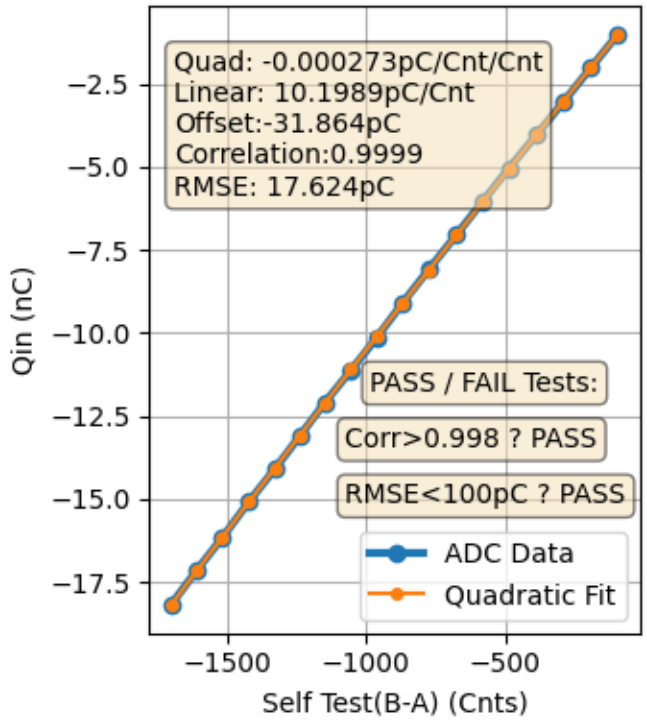
Quad: -0.000273pC/Cnt/Cnt
Linear: 10.1989pC/Cnt
Offset:-31.864pC
Correlation:0.9999
RMSE: 17.624pC
PASS / FAIL Tests:
Corr>0.998 ? PASS
RMSE<100pC ? PASS
ADC Data
Quadratic Fit
Qin (nC)
Self Test(B-A) (Cnts)

Test Pulses Measurements for ACMI Verification				
Test Pulse Ampl (V)	Integral Avg (nVS)	Integral Std (nVS)	Charge Avg (nC)	Charge Std (nC)
1.0	50.507	0.5056	1.01	0.0101
2.0	100.293	1.0306	2.006	0.0206
3.0	150.932	1.0069	3.019	0.0201
4.0	200.437	0.9323	4.009	0.0187
5.0	247.693	0.5798	4.954	0.0116
6.0	296.823	0.8575	5.936	0.0171
7.0	342.236	1.4906	6.845	0.0298
8.0	394.518	1.1898	7.89	0.0238
9.0	446.721	1.9997	8.934	0.04
10.0	498.209	3.5123	9.964	0.0702
11.0	544.839	3.8439	10.897	0.0769
12.0	593.827	4.0837	11.877	0.0817
13.0	642.958	3.4876	12.859	0.0697
14.0	692.871	3.1958	13.857	0.0639
15.0	742.307	3.0548	14.846	0.0611
16.0	797.437	3.2602	15.949	0.0652
17.0	848.172	3.3282	16.963	0.0666
18.0	898.68	2.7231	17.974	0.0545
19.0	944.324	10.0073	18.886	0.2001
20.0	995.234	11.0556	19.905	0.2211
21.0	1041.103	9.8368	20.822	0.1967
22.0	1090.955	10.7526	21.819	0.2151
23.0	1140.811	10.403	22.816	0.2081
HP8114A Pulse Generator was setup to produce 50 nSec wide pulses at the indicated voltages. Pulses measured directly by the MSO64B Scope with sample rate 3.125GS/S and an ADC resolution of 14-bits.				
The average and standard deviation are based on 25 repeated measurements made by the MSO64B Scope for each amplitude setting.				

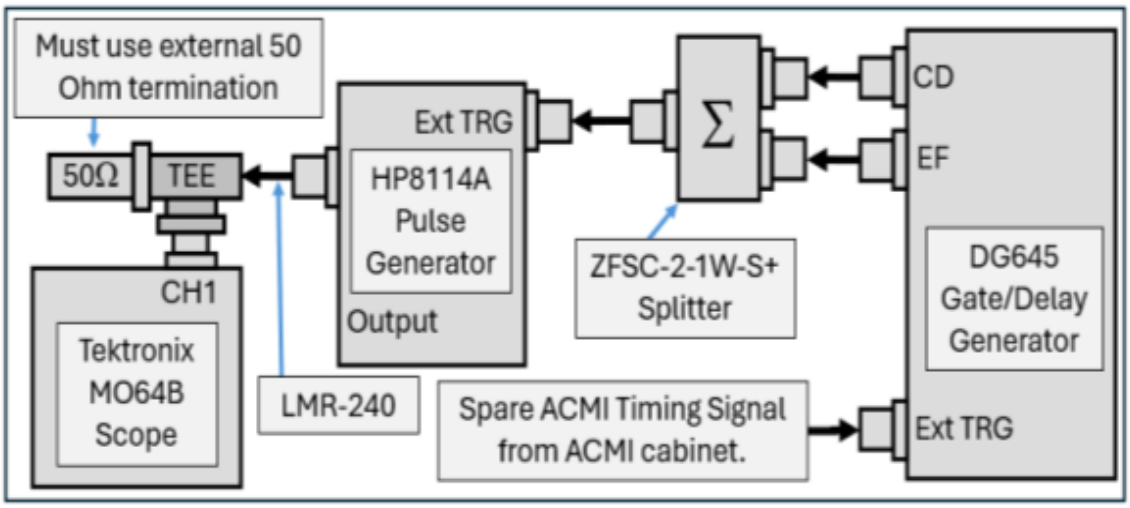

ACMI Charge Measurements for Verification				
Pulse (V)	Qin (nC)	Beam (nC)	ST(A-B) (nC)	ST(B-A) (nC)
1.0	1.0101	0.9666	0.9369	1.035
2.0	2.0059	1.9296	1.9003	1.9896
3.0	3.0186	2.92	2.8306	2.9355
4.0	4.0087	3.8866	3.7837	3.8566
5.0	4.9539	4.8222	4.7544	4.8134
6.0	5.9365	5.792	5.7041	5.727
7.0	6.8447	6.7426	6.6406	6.6953
8.0	7.8904	7.7272	7.6379	7.6886
9.0	8.9344	8.7272	8.5703	8.6217
10.0	9.9642	9.6811	9.5566	9.5349
11.0	10.8968	10.6484	10.4597	10.4971
12.0	11.8765	11.6229	11.4507	11.4259
13.0	12.8592	12.5504	12.3594	12.4023
14.0	13.8574	13.5366	13.2661	13.2924
15.0	14.8461	14.5016	14.2237	14.2632
16.0	15.9487	15.5426	15.2404	15.2739
17.0	16.9634	16.4985	16.1821	16.2106
18.0	17.9736	17.4581	17.1433	17.1513
19.0	18.8865	18.4221	18.0989	18.1089
20.0	19.9047	19.3789	19.0726	19.059
21.0	20.8221	20.3253	19.9495	19.9665
22.0	21.8191	21.0419	20.8771	20.8452
23.0	22.8162	21.0188	21.0276	21.0556
HP8114A Pulse Generator was setup to produce 50 nSec wide pulses at the indicated voltages. Pulses measured by the ACMI system. Python script reads appropriate PLC tag to obtain the charge values.				
The charge values are an average of 16 repeated measurements made by the ACMI system for each amplitude setting.				

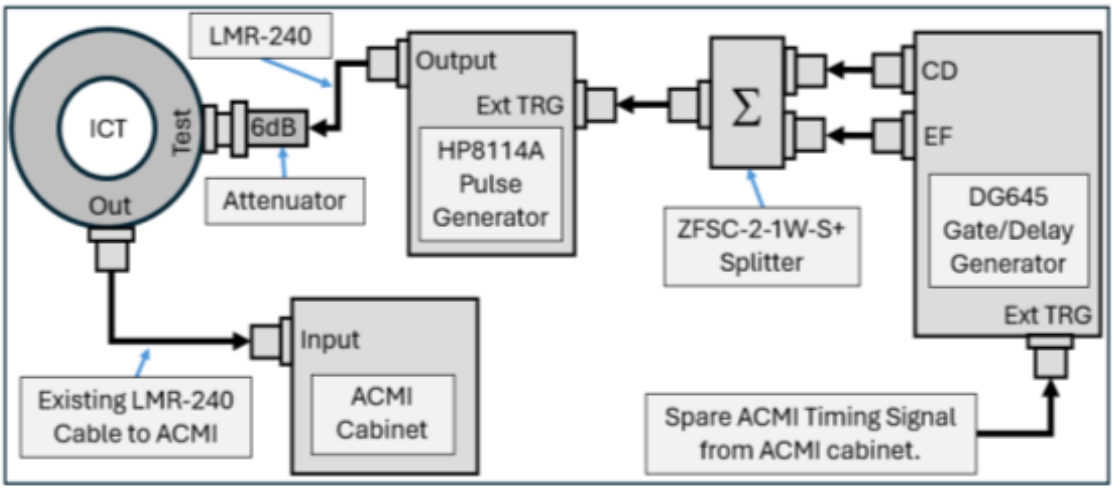

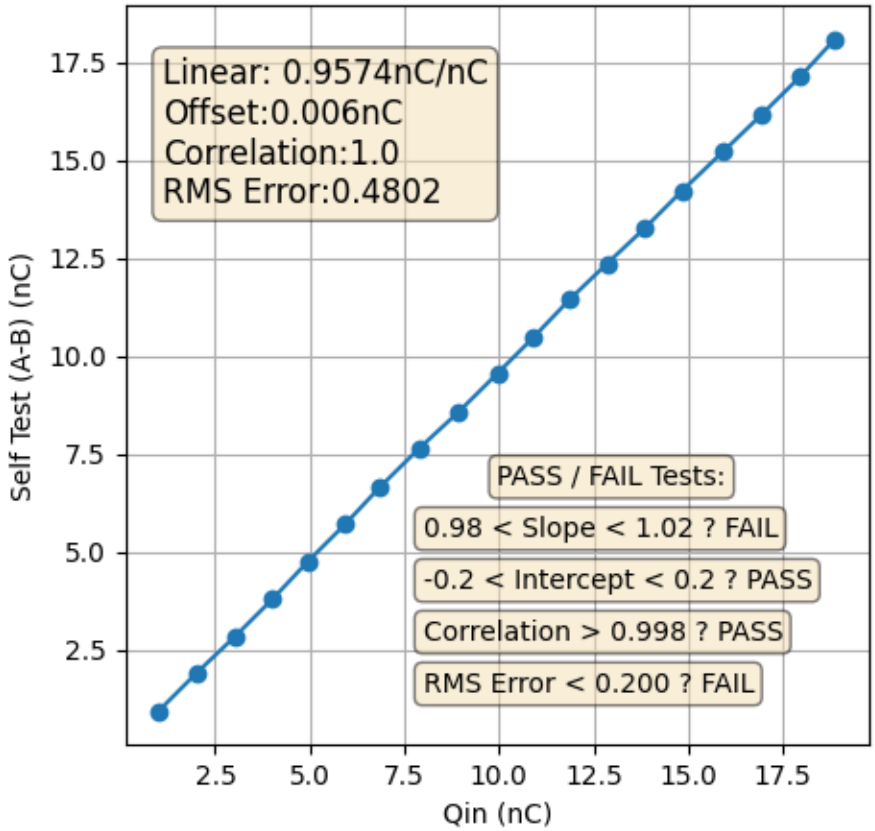
Linear: 0.9574nC/nC
Offset:0.006nC
Correlation:1.0
RMS Error:0.4802
PASS / FAIL Tests:
0.98 < Slope < 1.02 ? FAIL
-0.2 < Intercept < 0.2 ? PASS
Correlation > 0.998 ? PASS
RMS Error < 0.200 ? FAIL
Self Test (A-B) (nC)
Qin (nC)
2.5
5.0
7.5
10.0
12.5
15.0
17.5

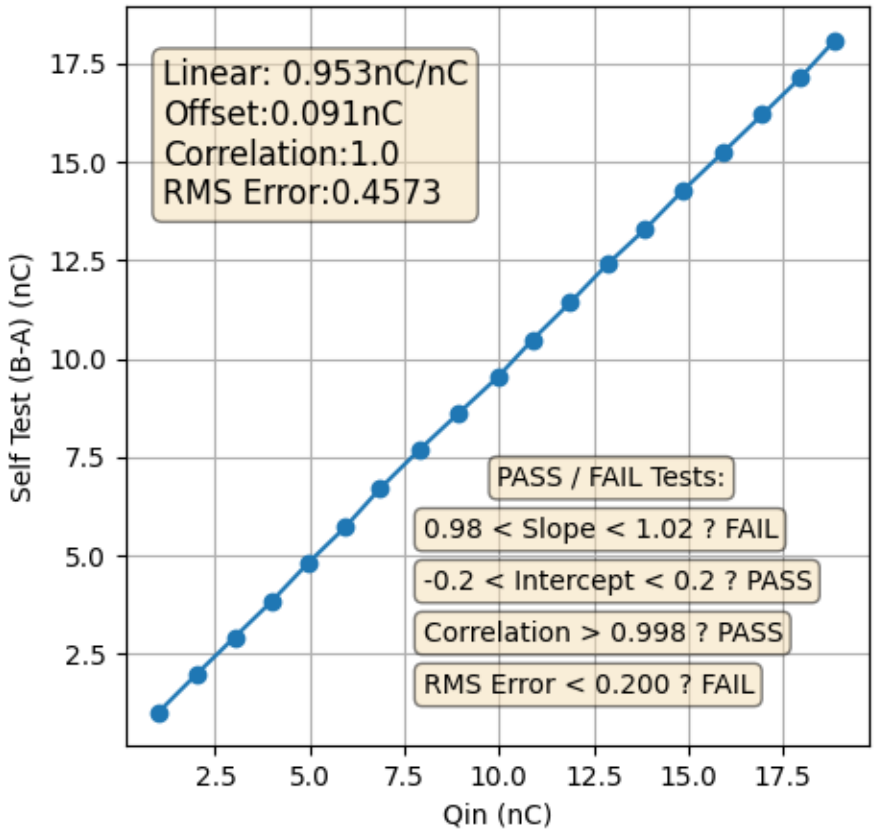
Linear: 0.953nC/nC
Offset:0.091nC
Correlation:1.0
RMS Error:0.4573
PASS / FAIL Tests:
0.98 < Slope < 1.02 ? FAIL
-0.2 < Intercept < 0.2 ? PASS
Correlation > 0.998 ? PASS
RMS Error < 0.200 ? FAIL
Self Test (B-A) (nC)
Qin (nC)
2.5
5.0
7.5
10.0
12.5
15.0
17.5

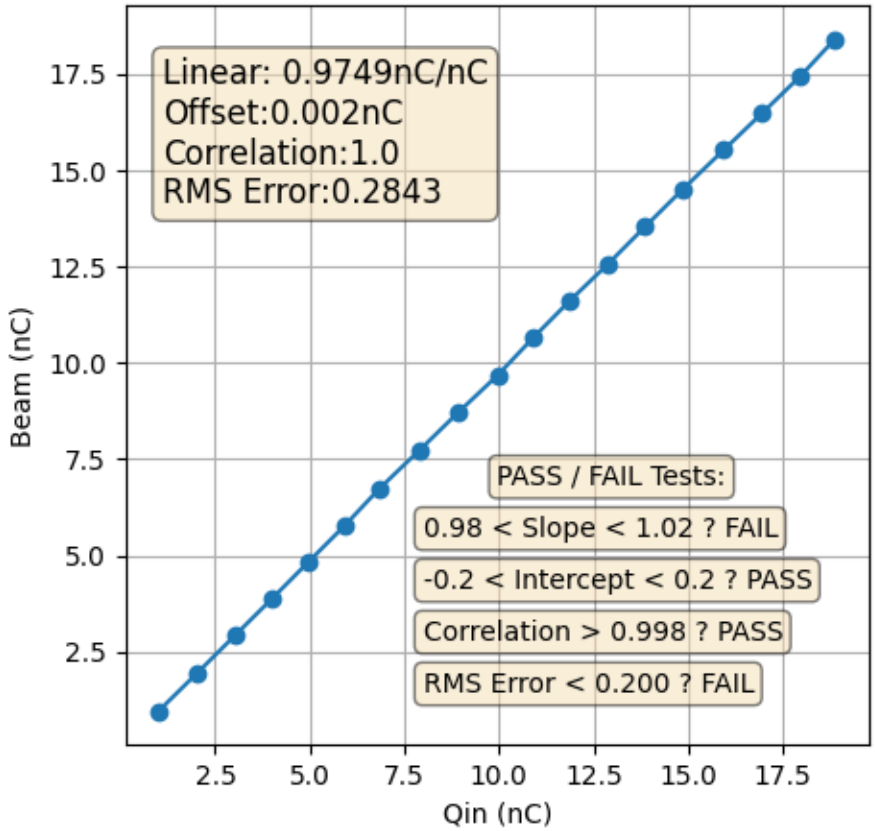
Linear: 0.9749nC/nC
Offset:0.002nC
Correlation:1.0
RMS Error:0.2843
PASS / FAIL Tests:
0.98 < Slope < 1.02 ? FAIL
-0.2 < Intercept < 0.2 ? PASS
Correlation > 0.998 ? PASS
RMS Error < 0.200 ? FAIL
Beam (nC)
Qin (nC)
2.5
5.0
7.5
10.0
12.5
15.0
17.5

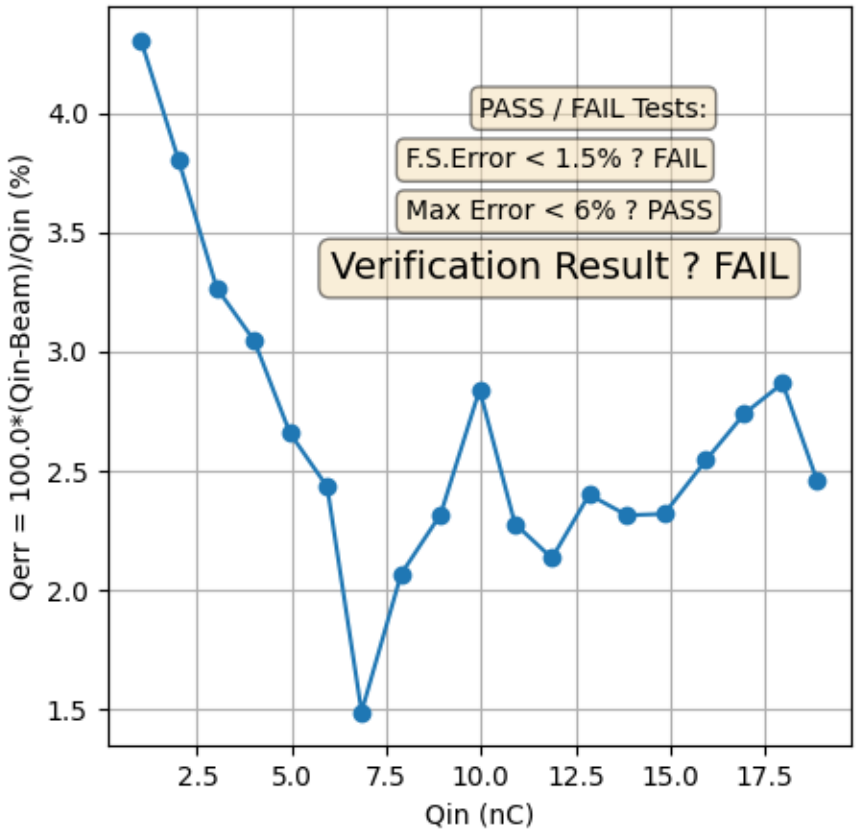
PASS / FAIL Tests:
F.S.Error < 1.5% ? FAIL
Max Error < 6% ? PASS
Verification Result ? FAIL
Qerr = 100.0*(Qin-Beam)/Qin (%)
Qin (nC)
1.5
2.0
2.5
3.0
3.5
4.0
2.5
5.0
7.5
10.0
12.5
15.0
17.5

ACMI Calibration Report Summary

All 3 ICT Ratio Measurement Tests		PASSED
All 9 ACMI Calibration Tests		FAILED
All 9 Inverted Polarity Tests		FAILED
All 14 Verification Tests		FAILED
Procedure Status		FAILED
New PLC Calibration Constants	Quadratic	334
	Linear	99016
	Offset	55

Final Actions to Closeout Procedure

Calibration Constants Updated in PLC?		DONE
PLC Safety Signature Generated?	Status	DONE
	Value	F6A8B43D
PLC Key set to Run Position?		DONE
ACMI Interlock Key Set to Bypass?		DONE
ECN Requested for PLC Changes?		DONE
Procedure: NSLSII-INS-PRC-001 Status?		COMPLETED