Results for LTB ICT and ACMI Calibration: NSLSII-INS-PRC001

Procedure Performed on 2/05/2026 by Anthony Caracappa and Kato Bouthsarath

Analysis Performed on 2/09/2026 by Anthony Caracappa

Setup Parameters for All Measurements		
Oscilloscope	Manufacturer	Tektronix
	Model Number	MSO64B
	Serial Number	B027138
	Calibration Expiration	12/29/2026
Fast HV Pulser	Manufacturer	HP
	Model Number	8114A
	Serial Number	3330 G 00691
	Calibration Expiration	*See Note 1
Gate / Delay Generator	Manufacturer	SRS
	Model Number	DG645
	Serial Number	003099
	Calibration Expiration	4/23/2026
Spectrum Analtzer	Manufacturer	Rohde & Schwarz
	Model Number	FWS50
	Serial Number	101986
	Calibration Expiration	10/30/2025
6dB Attenuator	Manufacturer	Minicircuits
	Model Number	VAT-6+
	Attenuation @ 20MHz	-6.0304dB
	Attenuation @ 50MHz	-5.9892dB
	Attenuation @ 100MHz	-6.0058dB
Splitter /Combiner	Manufacturer	Minicircuits
	Model Number	ZFSC-2-1W-S+
Personnel	Cognizant Engineer	Anthony Caracappa
	Trained Assistant	Kato Bouthsarath
Input Files	ICT Ratio	/home/bouthsarath/1_ACMI/ACMI-1/Calibration/ACI
	ACMI Calibration	/home/bouthsarath/1_ACMI/ACMI-1/Calibration/ACI
	Inverted Polarity	/home/bouthsarath/1_ACMI/ACMI-1/Calibration/ACI
	Calibration Verification	/home/bouthsarath/1_ACMI/ACMI-1/Calibration/ACI
Output Files	ACMI Report	/home/bouthsarath/1_ACMI/ACMI-1/Calibration/ACI

*Note 1: The HP8114A HV Pulser is not used to perform any measurements in this procedure and therefore does not need to be calibrated. The pulses produced by this device are measured by the other calibrated devices listed above.

ACMI Power Supply Measurements		
5.10 VDC Power Supply	Voltage Measurement:	5.1109
	5.05 < V < 5.15 ?	PASS
-5.10 VDC Power Supply	Voltage Measurement:	-5.1132
	-5.15 < V < -5.05 ?	PASS
3.3 VDC Power Supply	Voltage Measurement:	3.3695
	3.20 < V < 3.50 ?	PASS
24 VDC Power Supply #1	Voltage Measurement:	24.149
	23.5 < V < 24.5 ?	PASS
24 VDC Power Supply #2	Voltage Measurement:	24.133
	23.5 < V < 24.5 ?	PASS
All Voltage Measurements were made with the following device:		
Digital Multimeter	Manufacturer	Keithley
	Model Number	2100
	Serial Number	8020357
	Calibration Expiration	3/20/2025

Test Pulses Measurements for ICT Ratio				
Test Pulse Ampl (V)	Integral Avg (nVS)	Integral Std (nVS)	Charge Avg (nC)	Charge Std (nC)
1.0	50.664	0.3	1.013	0.006
2.0	100.72	0.458	2.014	0.0091
3.0	151.852	0.7493	3.037	0.015
4.0	202.231	0.7958	4.045	0.0159
5.0	251.1	0.8525	5.022	0.017
6.0	301.138	1.0118	6.023	0.0202
7.0	351.176	1.1266	7.024	0.0225
8.0	403.763	1.363	8.075	0.0273
9.0	453.711	1.7314	9.074	0.0346
10.0	503.626	2.1703	10.073	0.0434
11.0	553.673	2.1373	11.073	0.0427
12.0	603.216	2.4748	12.064	0.0495
13.0	654.451	2.2333	13.089	0.0447
14.0	702.594	2.4498	14.052	0.049
15.0	751.436	3.2297	15.029	0.0646
16.0	807.239	2.4075	16.145	0.0481
17.0	855.107	2.6357	17.102	0.0527
18.0	906.09	2.9958	18.122	0.0599
HP8114A Pulse Generator was setup to produce 50 nSec wide pulses at the indicated voltages. Pulses measured directly by the MSO64B Scope with sample rate 3.125GS/S and an ADC resolution of 14-bits.				
The average and standard deviation are based on 25 repeated measurements made by the MSO64B Scope for each amplitude setting.				

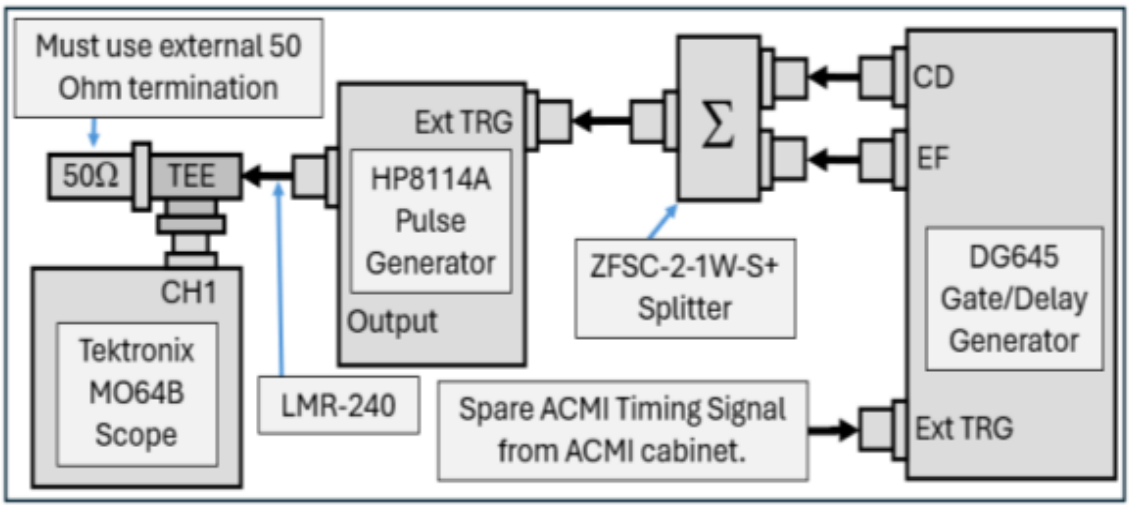

Output Pulses Measurements for ICT Ratio				
Test Pulse Ampl (V)	Integral Avg (nVS)	Integral Std (nVS)	Charge Avg (nC)	Charge Std (nC)
1.0	1.247	0.0203	0.025	0.0004
2.0	2.488	0.0273	0.05	0.0005
3.0	3.737	0.0203	0.075	0.0004
4.0	4.952	0.0298	0.099	0.0006
5.0	6.204	0.0227	0.124	0.0005
6.0	7.449	0.0262	0.149	0.0005
7.0	8.665	0.0255	0.173	0.0005
8.0	9.959	0.0484	0.199	0.001
9.0	11.2	0.0496	0.224	0.001
10.0	12.449	0.0635	0.249	0.0013
11.0	13.663	0.067	0.273	0.0013
12.0	14.925	0.0527	0.298	0.0011
13.0	16.159	0.0639	0.323	0.0013
14.0	17.353	0.0524	0.347	0.001
15.0	18.581	0.0628	0.372	0.0012
16.0	19.905	0.0725	0.398	0.0015
17.0	21.132	0.0752	0.423	0.0015
18.0	22.387	0.085	0.448	0.0017

HP8114A Pulse Generator was setup to produce 50 nSec wide pulses at the indicated voltages. ICT Output Pulses measured directly by the MSO64B Scope with sample rate of 3.125GS/S and an ADC resolution of 14-bits.

The average and standard deviation are based on 25 repeated measurements made by the MSO64B Scope for each amplitude setting.

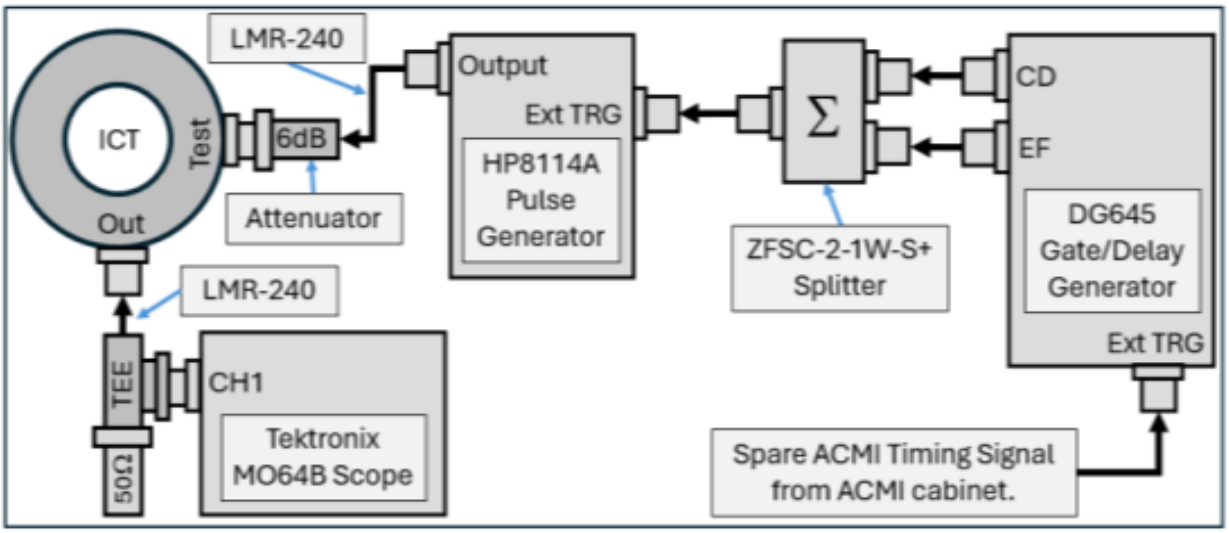

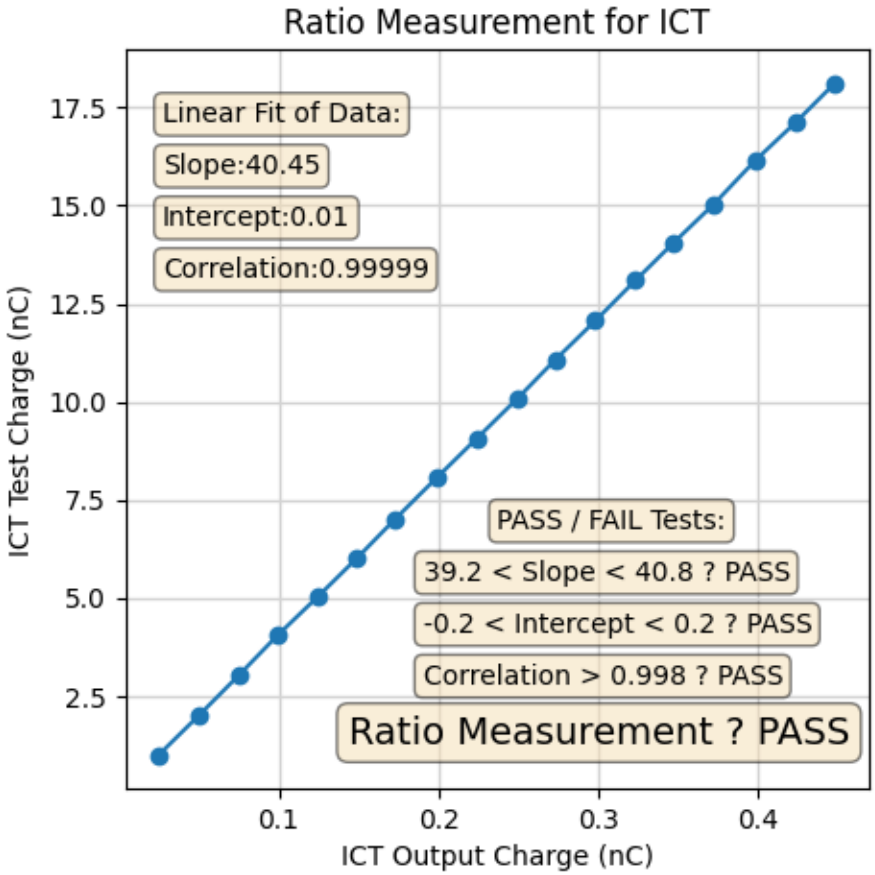
Ratio Measurement for ICT
Linear Fit of Data:
Slope:40.45
Intercept:0.01
Correlation:0.99999
PASS / FAIL Tests:
39.2 < Slope < 40.8 ? PASS
-0.2 < Intercept < 0.2 ? PASS
Correlation > 0.998 ? PASS
Ratio Measurement ? PASS
ICT Test Charge (nC)
ICT Output Charge (nC)
17.5
15.0
12.5
10.0
7.5
5.0
2.5
0.1
0.2
0.3
0.4

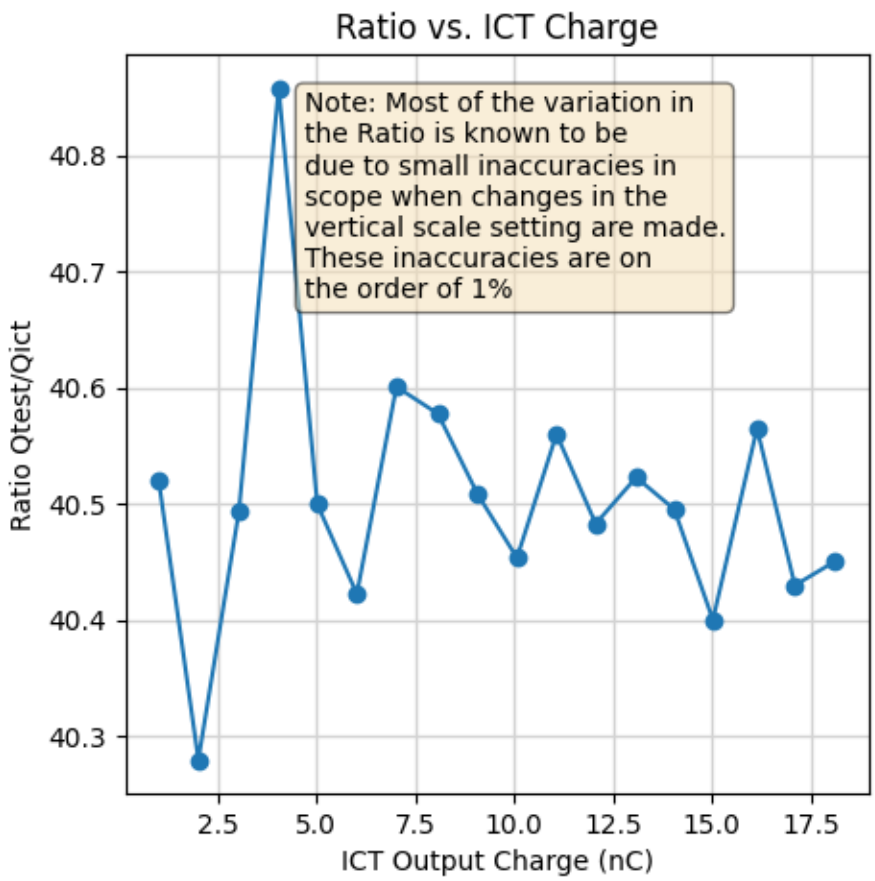
Ratio vs. ICT Charge
Note: Most of the variation in the Ratio is known to be due to small inaccuracies in scope when changes in the vertical scale setting are made. These inaccuracies are on the order of 1%
Ratio Qtest/Qict
ICT Output Charge (nC)
40.8
40.7
40.6
40.5
40.4
40.3
2.5
5.0
7.5
10.0
12.5
15.0
17.5

Measurements for ICT Qin and Qout		
Qin (nC)	Qout (nC)	Ratio (Qin/Qout)
1.013	0.025	40.52
2.014	0.05	40.28
3.037	0.075	40.493
4.045	0.099	40.859
5.022	0.124	40.5
6.023	0.149	40.423
7.024	0.173	40.601
8.075	0.199	40.578
9.074	0.224	40.509
10.073	0.249	40.454
11.073	0.273	40.56
12.064	0.298	40.483
13.089	0.323	40.523
14.052	0.347	40.496
15.029	0.372	40.401
16.145	0.398	40.565
17.102	0.423	40.43
18.122	0.448	40.451

Test Pulses Measurements for ACMI Calibration				
Test Pulse Ampl (V)	Integral Avg (nVS)	Integral Std (nVS)	Charge Avg (nC)	Charge Std (nC)
1.0	50.484	0.2894	1.01	0.0058
2.0	100.393	0.5785	2.008	0.0116
3.0	151.443	0.5855	3.029	0.0117
4.0	201.266	0.4922	4.025	0.0098
5.0	250.746	1.5196	5.015	0.0304
6.0	300.746	1.576	6.015	0.0315
7.0	349.956	1.4898	6.999	0.0298
8.0	401.993	1.2939	8.04	0.0259
9.0	451.381	1.7706	9.028	0.0354
10.0	501.769	2.5001	10.035	0.05
11.0	551.945	2.3273	11.039	0.0465
12.0	601.531	2.7255	12.031	0.0545
13.0	650.801	2.1095	13.016	0.0422
14.0	700.159	1.6897	14.003	0.0338
15.0	748.704	1.594	14.974	0.0319
16.0	803.131	2.3901	16.063	0.0478
17.0	852.759	1.5623	17.055	0.0312
18.0	900.997	2.6816	18.02	0.0536
19.0	952.418	9.1255	19.048	0.1825
20.0	1002.308	5.0808	20.046	0.1016
21.0	1050.849	5.5429	21.017	0.1109
22.0	1101.76	5.6184	22.035	0.1124
23.0	1150.414	7.0405	23.008	0.1408
HP8114A Pulse Generator was setup to produce 50 nSec wide pulses at the indicated voltages. Pulses measured directly by the MSO64B Scope with sample rate 3.125GS/S and an ADC resolution of 14-bits.				
The average and standard deviation are based on 10 repeated measurements made by the MSO64B Scope for each amplitude setting.				

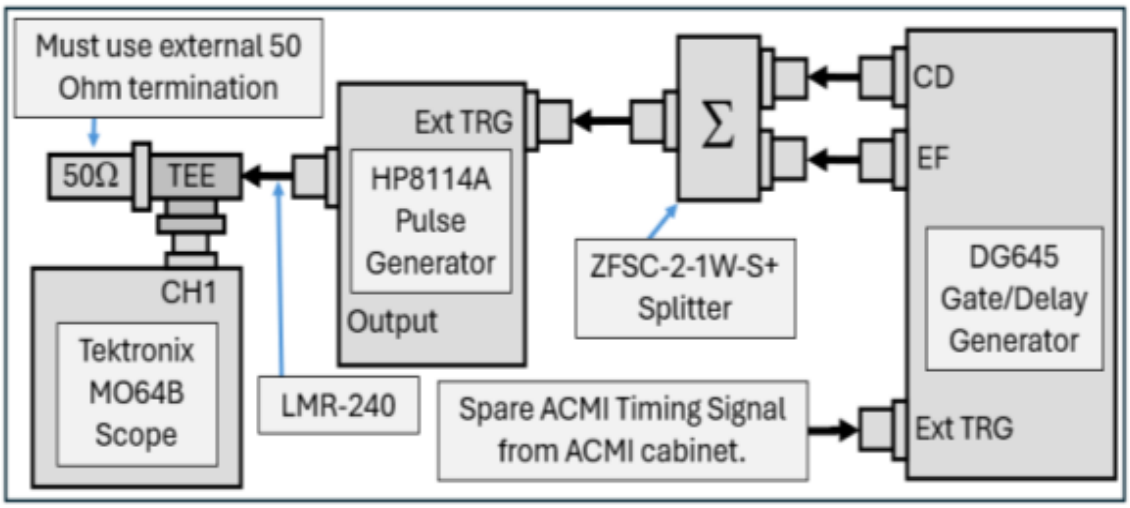

ADC Measurements from ACMI for Normal Beam Polarity							
Test Pulse (Volts)	Qin (nC)	Beam		Self Test (A-B)		Self Test (B-A)	
		ADCA	ADCB	ADCA	ADCB	ADCA	ADCB
1	1.01	101.9	4.4	103.8	9.1	3.1	106.1
2	2.008	199.9	6.1	203.2	3.7	2.2	204.9
3	3.029	304.2	6.4	302.6	6.6	2.2	305.4
4	4.025	399.7	5.1	399.2	7.6	-1.9	400.6
5	5.015	496.0	4.6	496.6	4.3	3.4	500.8
6	6.015	592.9	6.1	592.5	4.6	3.8	596.9
7	6.999	690.4	8.1	687.4	3.5	-0.6	688.9
8	8.04	790.1	7.0	791.6	6.8	2.4	791.6
9	9.028	885.1	6.7	883.0	3.6	2.9	885.1
10	10.035	978.9	3.1	980.6	7.7	1.4	979.4
11	11.039	1072.8	4.3	1071.9	6.2	3.4	1074.5
12	12.031	1167.9	6.4	1169.2	7.9	2.2	1167.2
13	13.016	1258.5	5.2	1256.2	6.8	3.8	1257.6
14	14.003	1353.3	6.9	1349.4	5.9	3.3	1349.9
15	14.974	1441.1	8.1	1438.2	4.8	3.0	1442.5
16	16.063	1540.9	6.1	1542.0	8.1	1.1	1539.9
17	17.055	1634.1	9.8	1633.8	8.2	1.2	1629.1
18	18.02	1721.2	5.1	1719.2	4.2	4.2	1721.6
19	19.048	1811.8	6.5	1808.2	4.9	1.9	1807.8
20	20.046	1904.0	10.4	1900.2	8.1	4.8	1897.6
21	21.017	1985.0	6.7	1986.9	6.8	2.9	1984.0
22	22.035	2047.0	4.9	2047.0	7.1	3.0	2047.0
23	23.008	2047.0	6.3	2047.0	7.8	2.4	2047.0
HP8114A Pulse Generator was setup to produce 50 nSec wide pulses at the indicated voltages. Pulser connected to ICT Test Input. ICT Output connected to ACMI Input. ADC values read from ACMI PLC over network using Python script.							
The averages are based on 16 repeated measurements made by the ACMI system for each amplitude setting of the HP8114A Pulse Generator.							

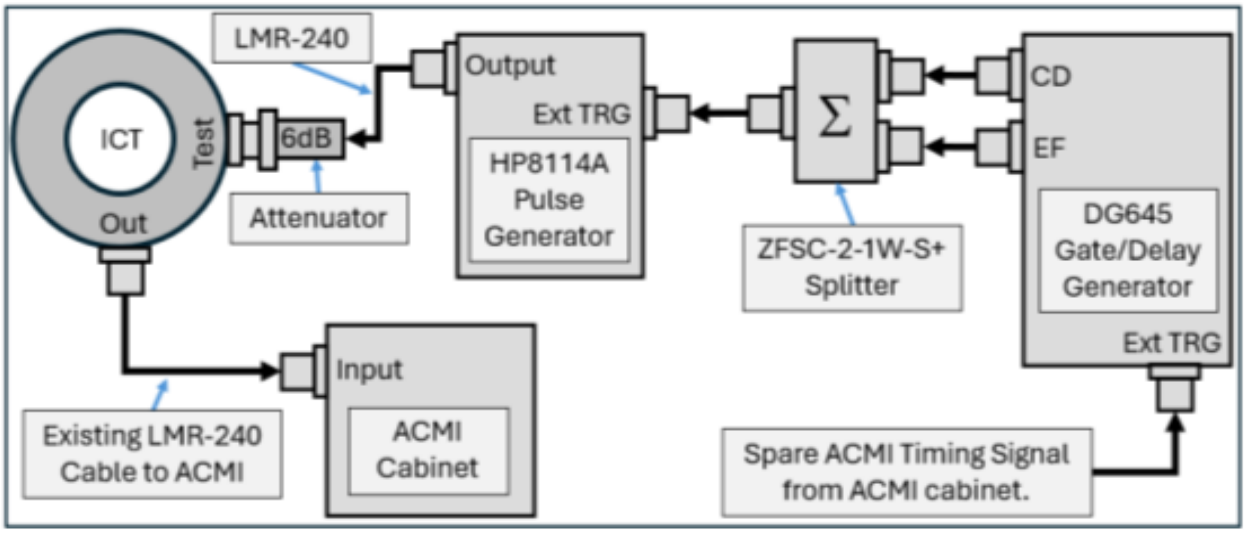

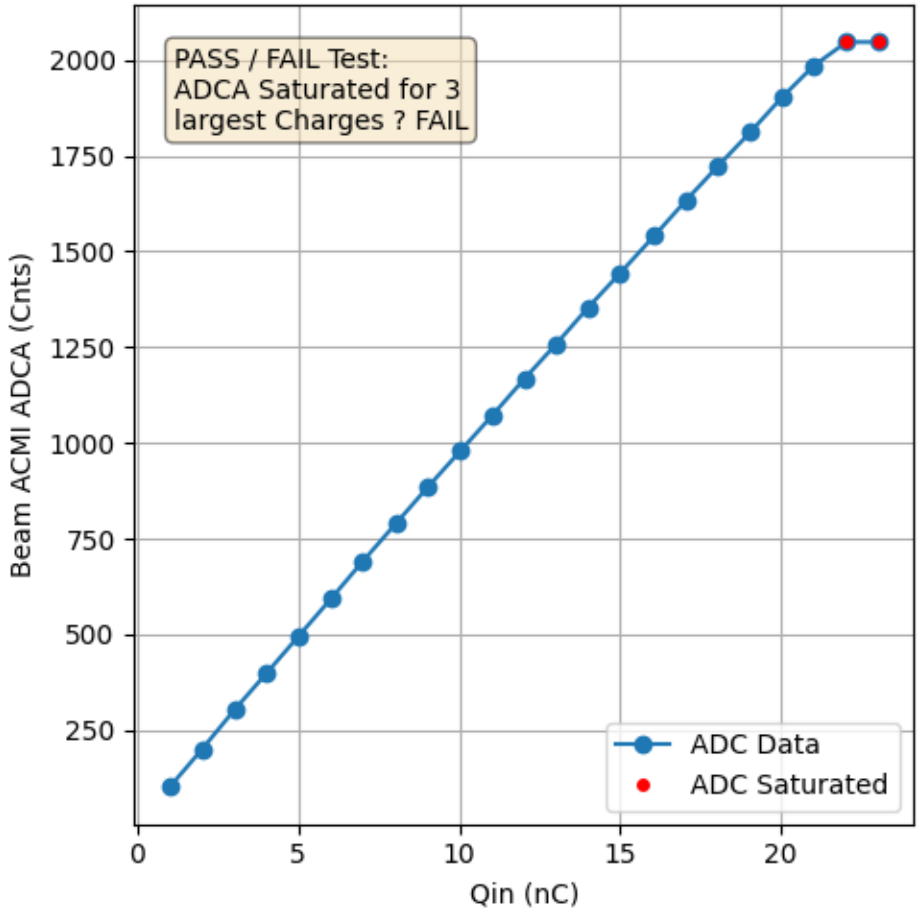
PASS / FAIL Test:
ADCA Saturated for 3
largest Charges ? FAIL
Beam ACMI ADCA (Cnts)
Qin (nC)
ADC Data
ADC Saturated

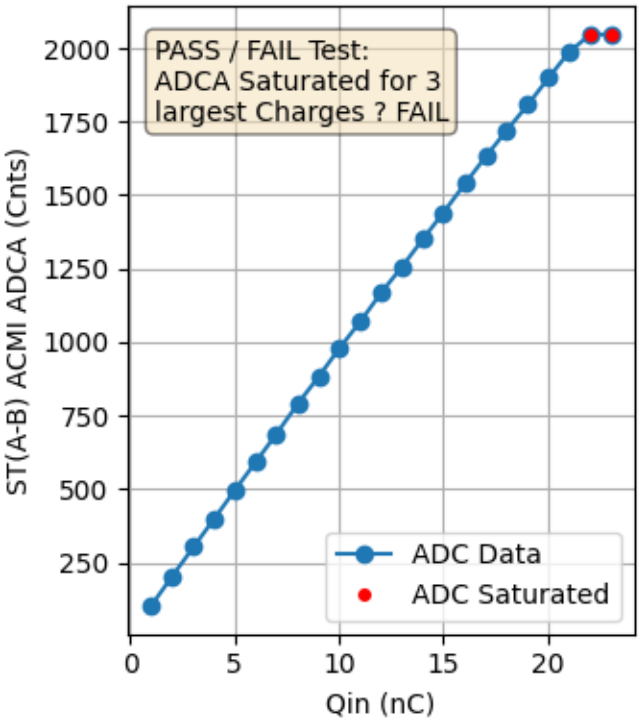
PASS / FAIL Test:
ADCA Saturated for 3
largest Charges ? FAIL
ST(A-B) ACMI ADCA (Cnts)
Qin (nC)
ADC Data
ADC Saturated

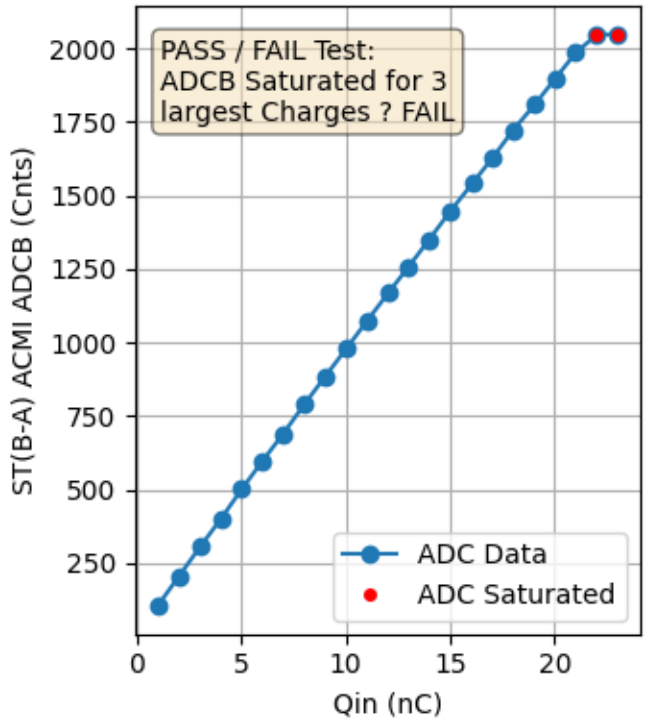
PASS / FAIL Test:
ADCB Saturated for 3
largest Charges ? FAIL
ST(B-A) ACMI ADCB (Cnts)
Qin (nC)
ADC Data
ADC Saturated

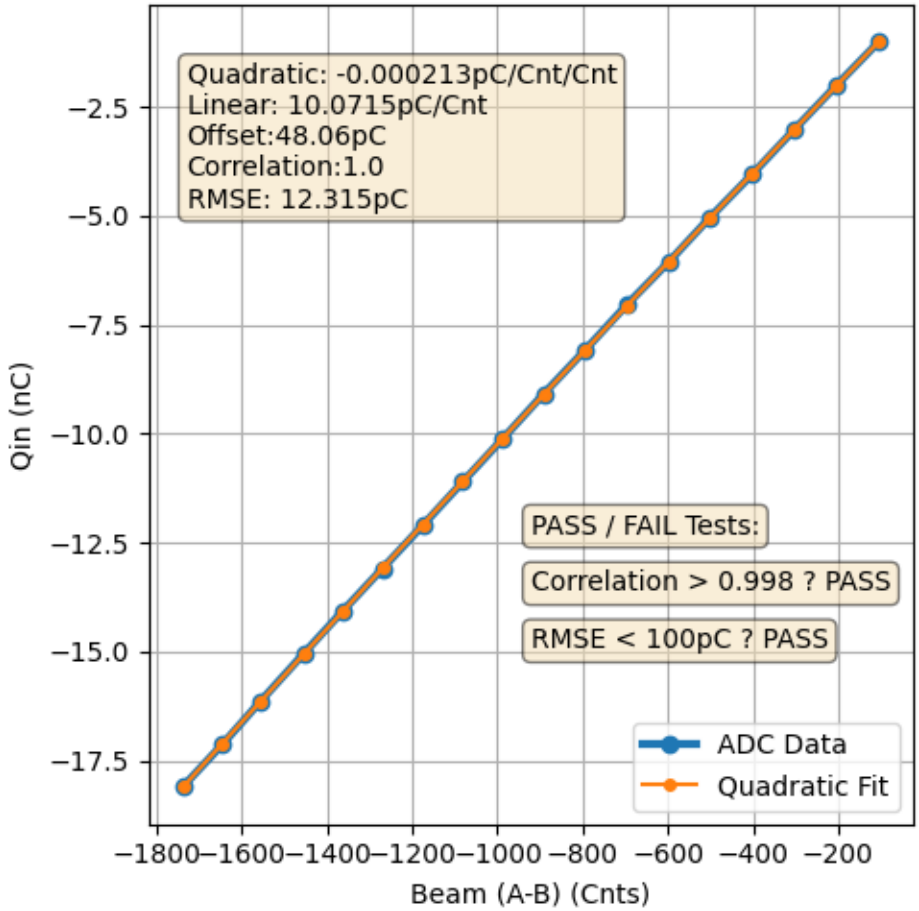
Quadratic: -0.000213pC/Cnt/Cnt
Linear: 10.0715pC/Cnt
Offset:48.06pC
Correlation:1.0
RMSE: 12.315pC
PASS / FAIL Tests:
Correlation > 0.998 ? PASS
RMSE < 100pC ? PASS
ADC Data
Quadratic Fit
Qin (nC)
Beam (A-B) (Cnts)

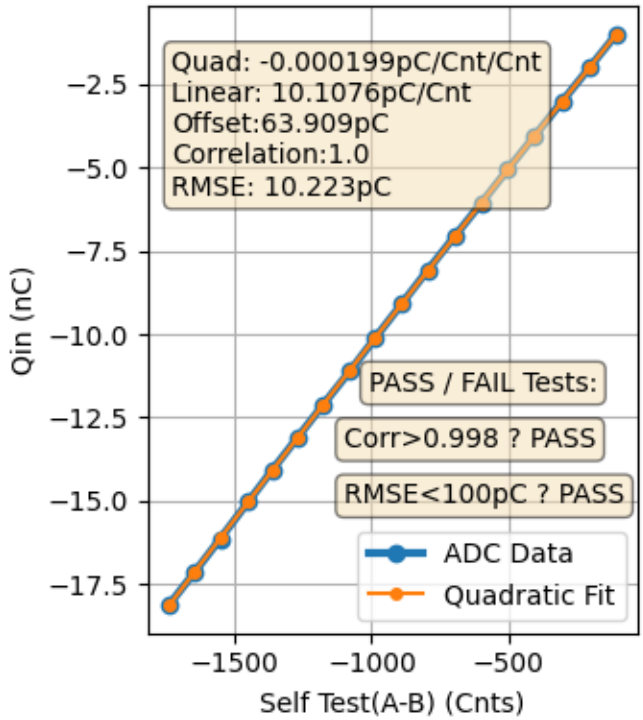
Quad: -0.000199pC/Cnt/Cnt
Linear: 10.1076pC/Cnt
Offset:63.909pC
Correlation:1.0
RMSE: 10.223pC
PASS / FAIL Tests:
Corr>0.998 ? PASS
RMSE<100pC ? PASS
ADC Data
Quadratic Fit
Qin (nC)
Self Test(A-B) (Cnts)

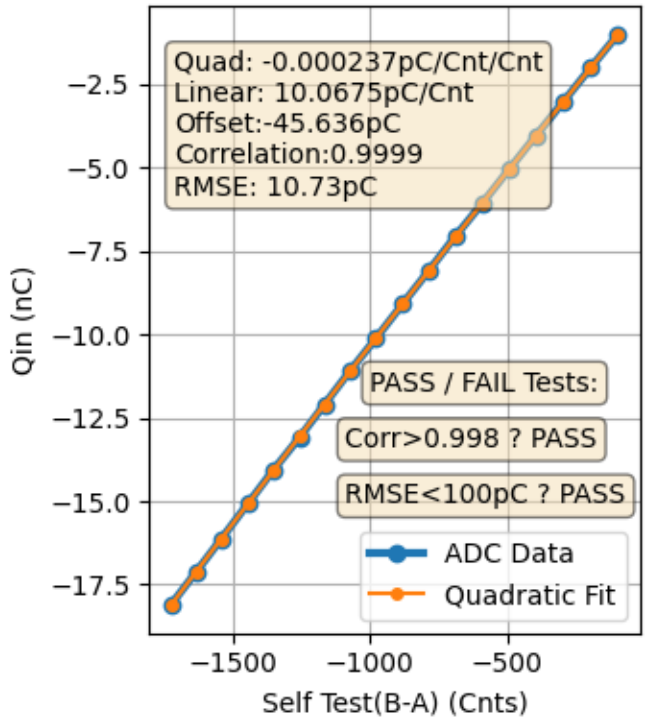
Quad: -0.000237pC/Cnt/Cnt
Linear: 10.0675pC/Cnt
Offset:-45.636pC
Correlation:0.9999
RMSE: 10.73pC
PASS / FAIL Tests:
Corr>0.998 ? PASS
RMSE<100pC ? PASS
ADC Data
Quadratic Fit
Qin (nC)
Self Test(B-A) (Cnts)

Test Pulses Measurements for Inverted Polarity				
Test Pulse Ampl (V)	Integral Avg (nVS)	Integral Std (nVS)	Charge Avg (nC)	Charge Std (nC)
-1.0	-50.862	0.4908	-1.017	0.0098
-2.0	-101.107	0.6277	-2.022	0.0126
-3.0	-151.922	0.6648	-3.038	0.0133
-4.0	-202.537	0.6801	-4.051	0.0136
-5.0	-252.916	1.2411	-5.058	0.0248
-6.0	-303.179	1.3253	-6.064	0.0265
-7.0	-352.604	1.2121	-7.052	0.0242
-8.0	-404.337	1.1664	-8.087	0.0233
-9.0	-454.238	1.1495	-9.085	0.023
-10.0	-505.526	2.4631	-10.111	0.0493
-11.0	-554.855	1.9655	-11.097	0.0393
-12.0	-605.107	2.3717	-12.102	0.0474
-13.0	-654.461	1.8852	-13.089	0.0377
-14.0	-703.235	2.5991	-14.065	0.052
-15.0	-751.401	2.8676	-15.028	0.0574
-16.0	-806.477	2.5163	-16.13	0.0503
-17.0	-855.75	2.0423	-17.115	0.0408
-18.0	-904.45	2.3312	-18.089	0.0466
-19.0	-960.58	3.7557	-19.212	0.0751
-20.0	-1010.542	4.1355	-20.211	0.0827
-21.0	-1061.038	3.8284	-21.221	0.0766
-22.0	-1112.189	4.6836	-22.244	0.0937
-23.0	-1161.889	3.3765	-23.238	0.0675
HP8114A Pulse Generator was setup to produce 50 nSec wide pulses at the indicated voltages. Pulses measured directly by the MSO64B Scope with sample rate 3.125GS/S and an ADC resolution of 14-bits.				
The average and standard deviation are based on 25 repeated measurements made by the MSO64B Scope for each amplitude setting.				

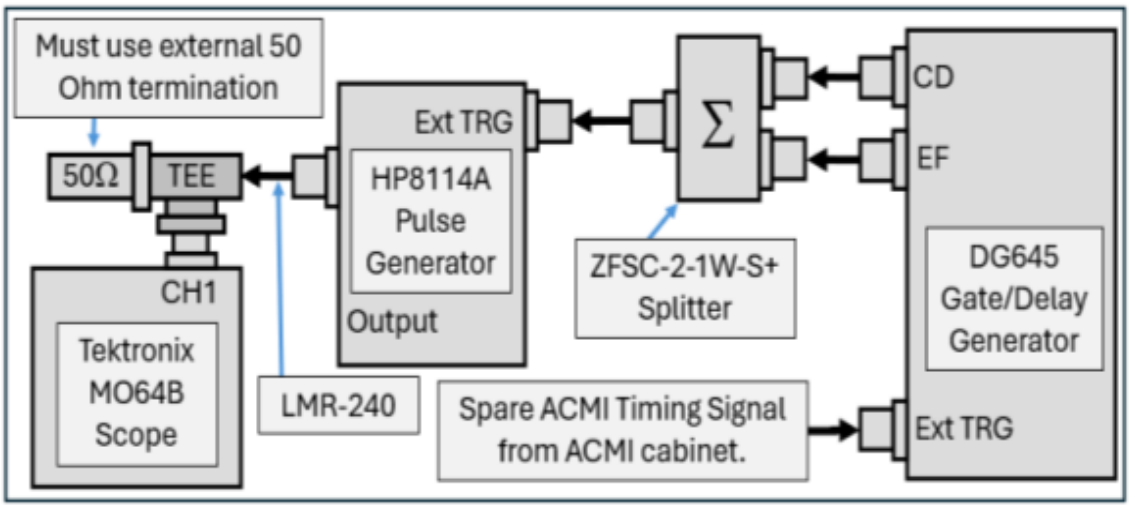

ADC Measurements from ACMI for Inverted Beam Polarity							
Test Pulse (Volts)	Qin (nC)	Beam		Self Test (A-B)		Self Test (B-A)	
		ADCA	ADCB	ADCA	ADCB	ADCA	ADCB
-1	-1.017	-98.0	7.2	-100.4	5.9	1.6	-94.2
-2	-2.022	-196.6	8.7	-199.5	5.9	1.6	-194.2
-3	-3.038	-297.6	6.6	-298.1	6.9	1.8	-293.0
-4	-4.051	-397.2	4.8	-397.3	6.9	2.8	-391.8
-5	-5.058	-496.2	6.4	-496.5	5.8	2.1	-490.2
-6	-6.064	-591.9	6.2	-592.8	5.8	1.8	-586.9
-7	-7.052	-689.8	7.4	-688.9	6.4	2.2	-684.9
-8	-8.087	-789.1	5.4	-789.6	6.1	1.2	-782.9
-9	-9.085	-884.6	6.8	-882.8	6.9	1.9	-877.6
-10	-10.111	-979.8	7.3	-980.4	6.8	2.1	-974.5
-11	-11.097	-1073.4	7.4	-1072.2	6.4	2.7	-1069.1
-12	-12.102	-1168.6	6.8	-1171.1	5.2	1.6	-1163.4
-13	-13.089	-1262.2	7.4	-1264.3	5.8	1.5	-1254.2
-14	-14.065	-1356.1	6.9	-1356.2	6.2	3.8	-1347.4
-15	-15.028	-1446.6	6.9	-1445.1	6.4	0.7	-1439.2
-16	-16.13	-1547.3	8.4	-1547.1	6.2	1.4	-1539.8
-17	-17.115	-1639.4	5.4	-1640.4	5.0	2.9	-1629.4
-18	-18.089	-1730.5	7.4	-1731.1	7.0	2.0	-1721.1
-19	-19.212	-1823.8	5.9	-1822.2	6.4	1.4	-1814.4
-20	-20.211	-1913.3	7.1	-1914.1	6.2	0.8	-1904.9
-21	-21.221	-2004.2	7.2	-2005.4	3.6	1.1	-1994.4
-22	-22.244	-2048.0	5.6	-2048.0	4.6	-0.4	-2048.0
-23	-23.238	-2048.0	7.0	-2048.0	4.8	1.4	-2048.0

HP8114A Pulse Generator was setup to produce 50 nSec wide pulses at the indicated voltages. Pulser connected to ICT Test Input. ICT Output connected to ACMI Input. ADC values read from ACMI PLC over network using Python script.

The averages are based on 16 repeated measurements made by the ACMI system for each amplitude setting of the HP8114A Pulse Generator.

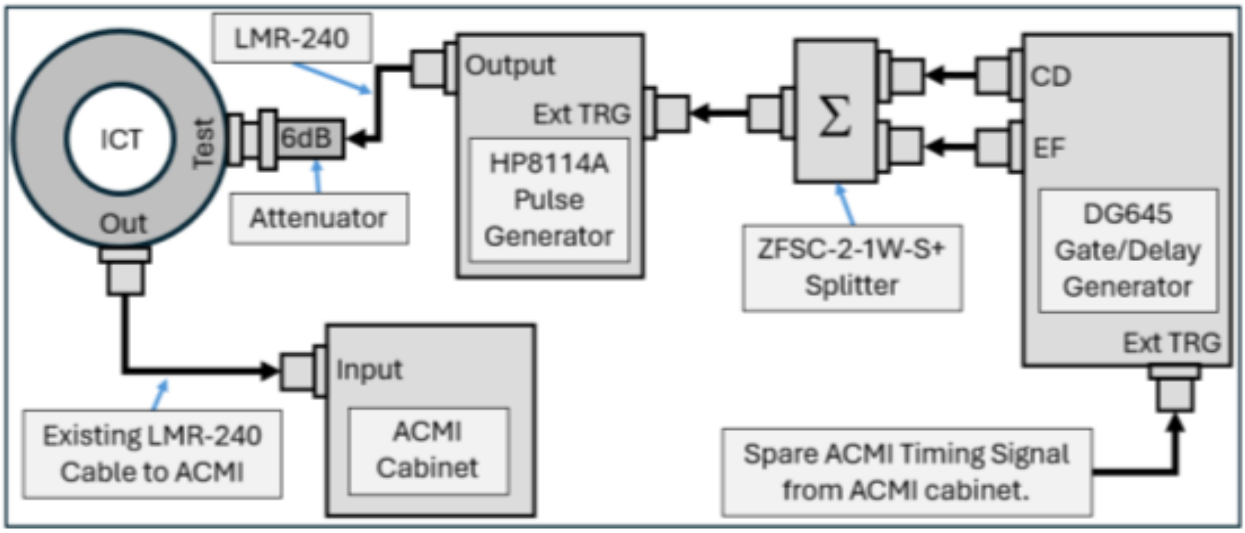

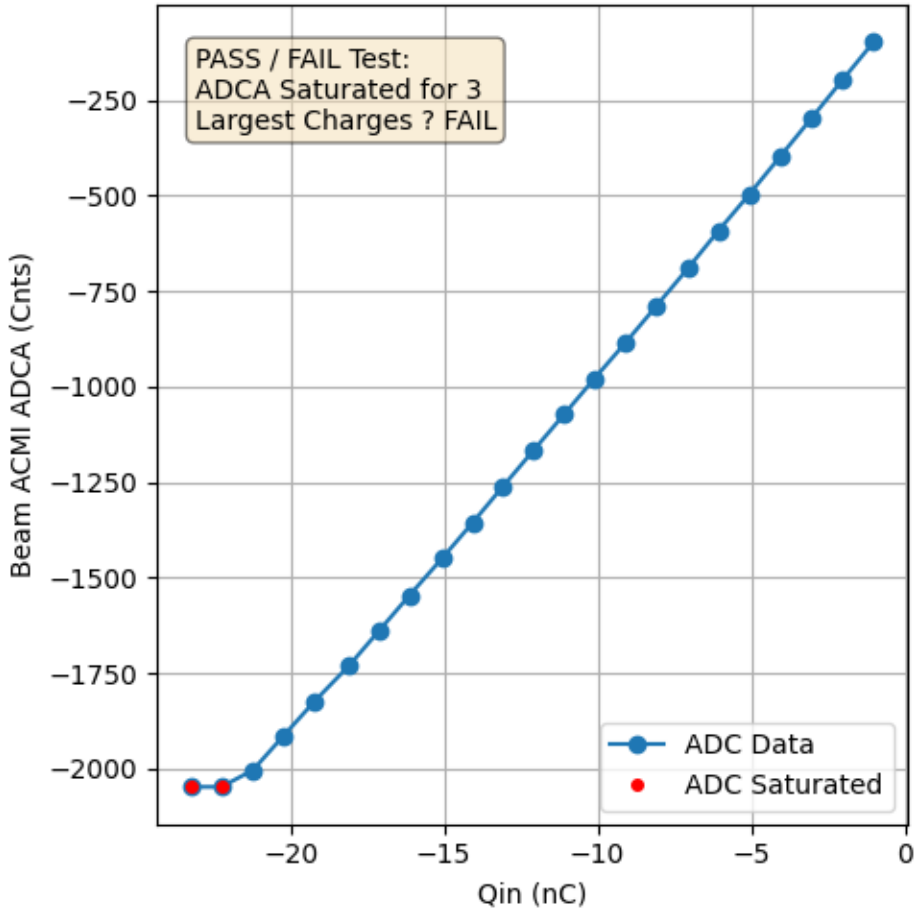
PASS / FAIL Test:
ADCA Saturated for 3
Largest Charges ? FAIL
ADC Data
ADC Saturated
Beam ACMI ADCA (Cnts)
Qin (nC)
−250
−500
−750
−1000
−1250
−1500
−1750
−2000
−20
−15
−10
−5
0

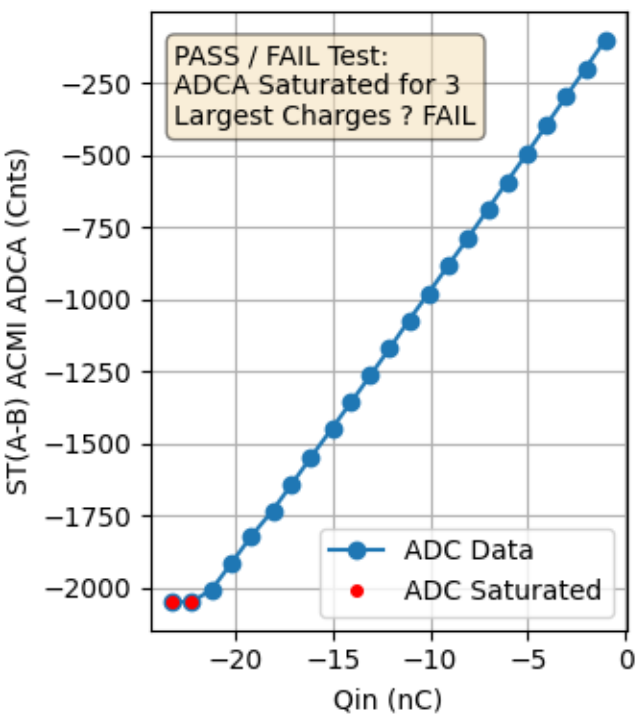
PASS / FAIL Test:
ADCA Saturated for 3
Largest Charges ? FAIL
ADC Data
ADC Saturated
ST(A-B) ACMI ADCA (Cnts)
Qin (nC)
−250
−500
−750
−1000
−1250
−1500
−1750
−2000
−20
−15
−10
−5
0

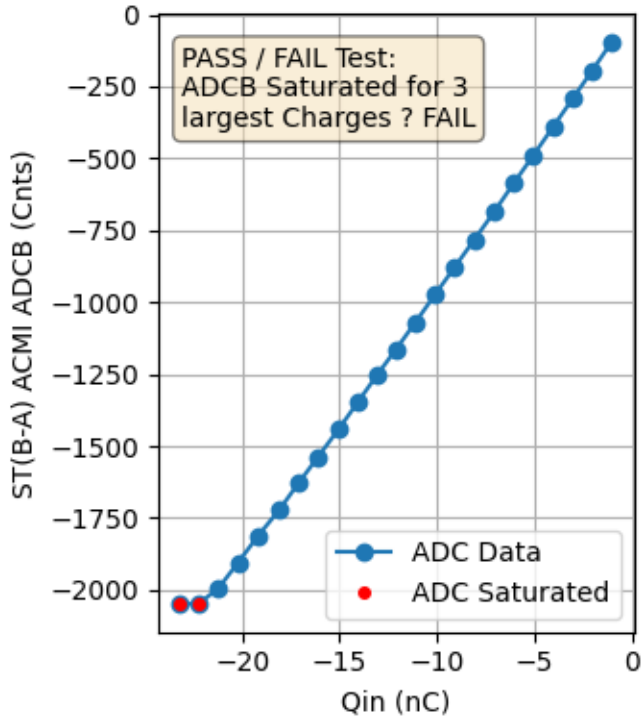
PASS / FAIL Test:
ADCB Saturated for 3
largest Charges ? FAIL
ADC Data
ADC Saturated
ST(B-A) ACMI ADCB (Cnts)
Qin (nC)
0
−250
−500
−750
−1000
−1250
−1500
−1750
−2000
−20
−15
−10
−5
0

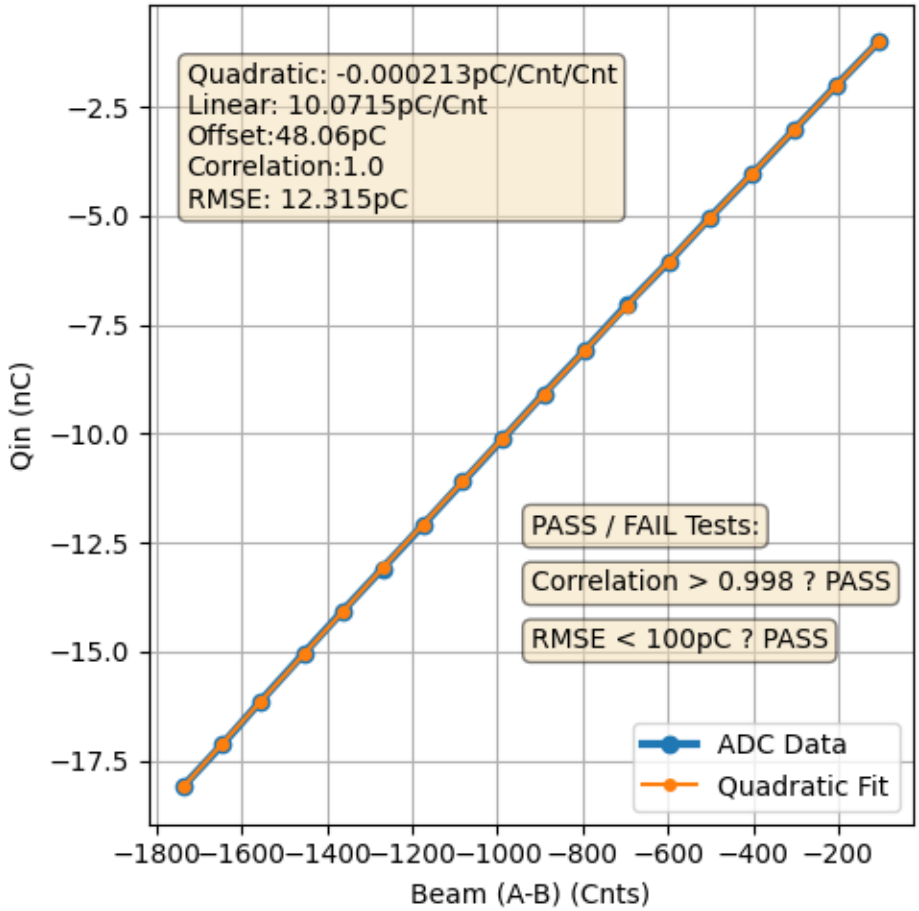
Quadratic: -0.000213pC/Cnt/Cnt
Linear: 10.0715pC/Cnt
Offset:48.06pC
Correlation:1.0
RMSE: 12.315pC
PASS / FAIL Tests:
Correlation > 0.998 ? PASS
RMSE < 100pC ? PASS
ADC Data
Quadratic Fit
Qin (nC)
Beam (A-B) (Cnts)

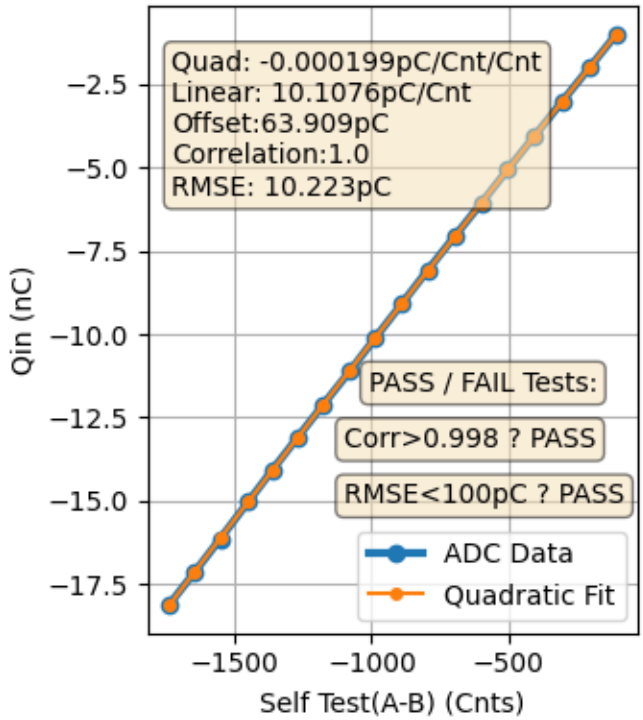
Quad: -0.000199pC/Cnt/Cnt
Linear: 10.1076pC/Cnt
Offset:63.909pC
Correlation:1.0
RMSE: 10.223pC
PASS / FAIL Tests:
Corr>0.998 ? PASS
RMSE<100pC ? PASS
ADC Data
Quadratic Fit
Qin (nC)
Self Test(A-B) (Cnts)

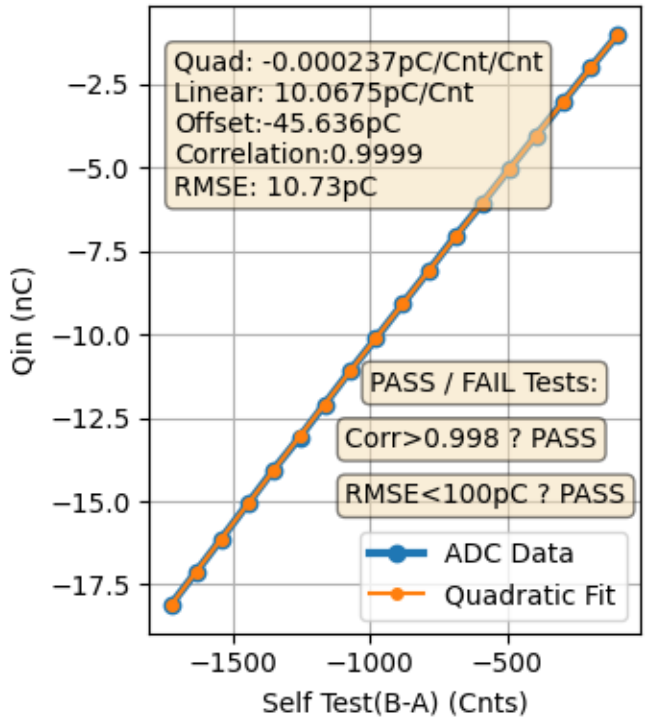
Quad: -0.000237pC/Cnt/Cnt
Linear: 10.0675pC/Cnt
Offset:-45.636pC
Correlation:0.9999
RMSE: 10.73pC
PASS / FAIL Tests:
Corr>0.998 ? PASS
RMSE<100pC ? PASS
ADC Data
Quadratic Fit
Qin (nC)
Self Test(B-A) (Cnts)

Test Pulses Measurements for ACMI Verification				
Test Pulse Ampl (V)	Integral Avg (nVS)	Integral Std (nVS)	Charge Avg (nC)	Charge Std (nC)
1.0	50.021	0.2622	1.0	0.0052
2.0	99.55	0.5746	1.991	0.0115
3.0	149.932	0.5495	2.999	0.011
4.0	199.404	0.7136	3.988	0.0143
5.0	248.957	1.2033	4.979	0.0241
6.0	297.705	1.2024	5.954	0.024
7.0	348.196	1.0469	6.964	0.0209
8.0	399.662	1.0373	7.993	0.0207
9.0	449.029	1.3208	8.981	0.0264
10.0	497.538	2.3505	9.951	0.047
11.0	547.434	2.6147	10.949	0.0523
12.0	596.254	1.877	11.925	0.0375
13.0	645.971	2.453	12.919	0.0491
14.0	694.578	2.2895	13.892	0.0458
15.0	744.323	3.2551	14.886	0.0651
16.0	799.812	3.211	15.996	0.0642
17.0	848.241	2.4987	16.965	0.05
18.0	895.123	2.511	17.902	0.0502
19.0	943.806	4.0038	18.876	0.0801
20.0	993.835	7.0998	19.877	0.142
21.0	1044.397	6.6696	20.888	0.1334
22.0	1091.753	4.0248	21.835	0.0805
23.0	1142.666	6.061	22.853	0.1212
HP8114A Pulse Generator was setup to produce 50 nSec wide pulses at the indicated voltages. Pulses measured directly by the MSO64B Scope with sample rate 3.125GS/S and an ADC resolution of 14-bits.				
The average and standard deviation are based on 25 repeated measurements made by the MSO64B Scope for each amplitude setting.				

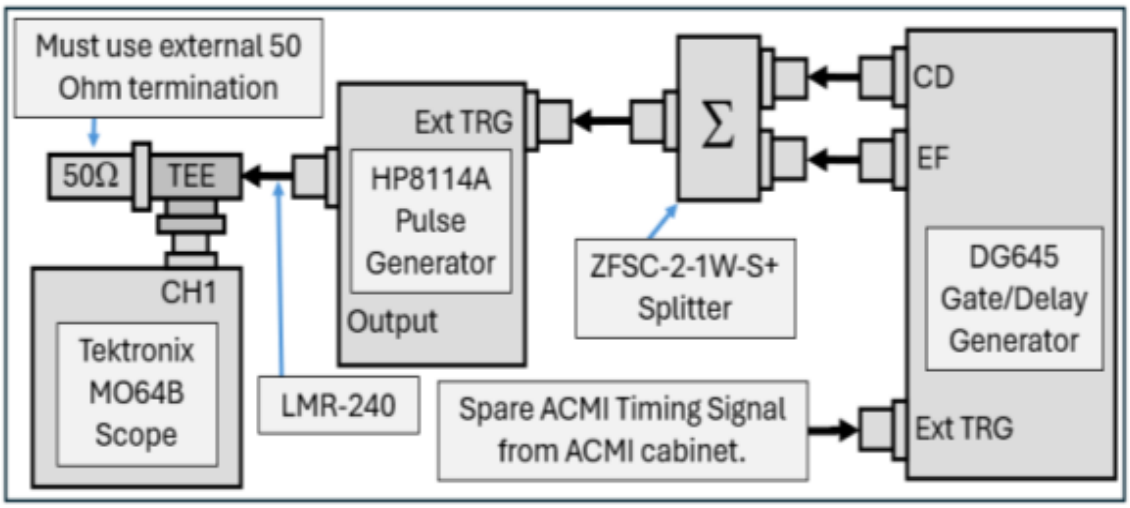

ACMI Charge Measurements for Verification				
Pulse (V)	Qin (nC)	Beam (nC)	ST(A-B) (nC)	ST(B-A) (nC)
1.0	1.0004	1.0256	1.0311	1.1078
2.0	1.991	2.0149	2.0174	2.0877
3.0	2.9986	3.0307	3.0182	3.1209
4.0	3.9881	4.0111	4.0093	4.0868
5.0	4.9791	5.0142	5.0219	5.0754
6.0	5.9541	5.9913	6.0176	6.0438
7.0	6.9639	6.9786	6.9744	7.0056
8.0	7.9932	7.9941	8.0074	8.0668
9.0	8.9806	8.9856	8.9724	9.0477
10.0	9.9508	9.9585	9.9644	10.0123
11.0	10.9487	10.97	10.9589	10.9929
12.0	11.9251	11.9378	11.939	12.0063
13.0	12.9194	12.9109	12.9241	12.9822
14.0	13.8916	13.8886	13.9271	13.9231
15.0	14.8865	14.8689	14.8549	14.9058
16.0	15.9962	15.9298	15.9259	15.9655
17.0	16.9648	16.8712	16.8935	16.9355
18.0	17.9025	17.9085	17.8699	17.9106
19.0	18.8761	18.8556	18.8446	18.8489
20.0	19.8767	19.8226	19.8097	19.85
21.0	20.8879	20.7896	20.7703	20.7979
22.0	21.8351	21.4144	21.4269	21.4482
23.0	22.8533	21.4297	21.4408	21.4772

HP8114A Pulse Generator was setup to produce 50 nSec wide pulses at the indicated voltages. Pulses measured by the ACMI system. Python script reads appropriate PLC tag to obtain the charge values.

The charge values are an average of 16 repeated measurements made by the ACMI system for each amplitude setting.

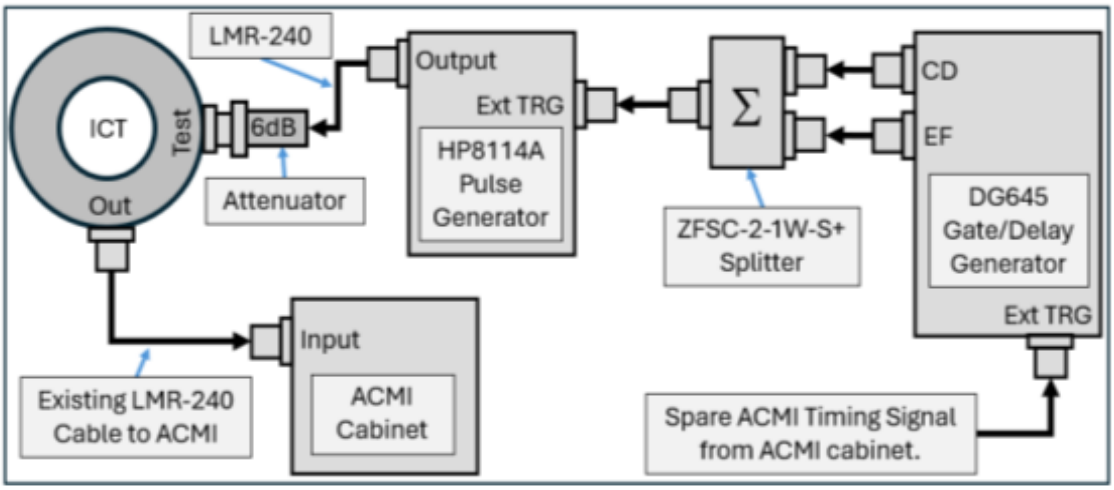

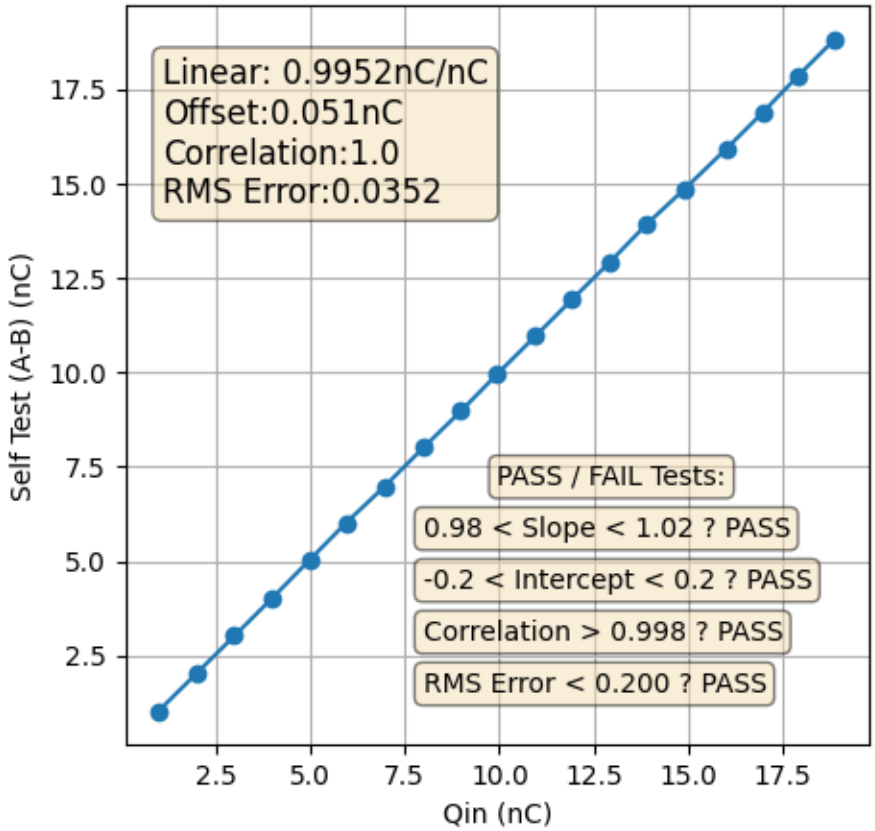
Linear: 0.9952nC/nC
Offset:0.051nC
Correlation:1.0
RMS Error:0.0352
PASS / FAIL Tests:
0.98 < Slope < 1.02 ? PASS
-0.2 < Intercept < 0.2 ? PASS
Correlation > 0.998 ? PASS
RMS Error < 0.200 ? PASS
Self Test (A-B) (nC)
Qin (nC)
2.5
5.0
7.5
10.0
12.5
15.0
17.5

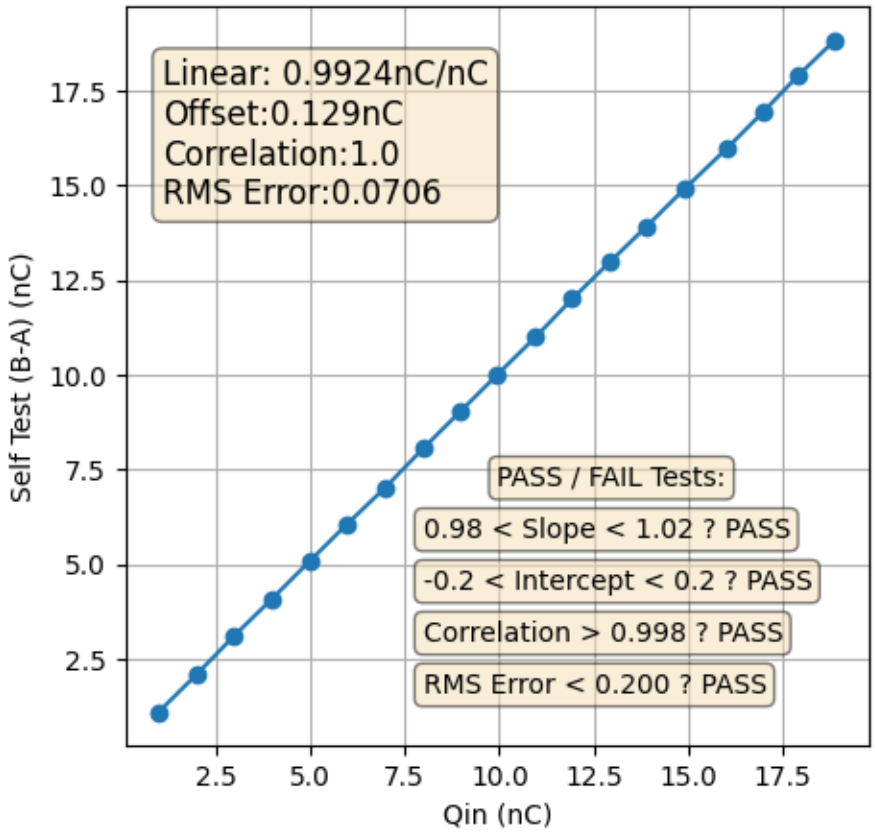
Linear: 0.9924nC/nC
Offset:0.129nC
Correlation:1.0
RMS Error:0.0706
PASS / FAIL Tests:
0.98 < Slope < 1.02 ? PASS
-0.2 < Intercept < 0.2 ? PASS
Correlation > 0.998 ? PASS
RMS Error < 0.200 ? PASS
Self Test (B-A) (nC)
Qin (nC)
2.5
5.0
7.5
10.0
12.5
15.0
17.5

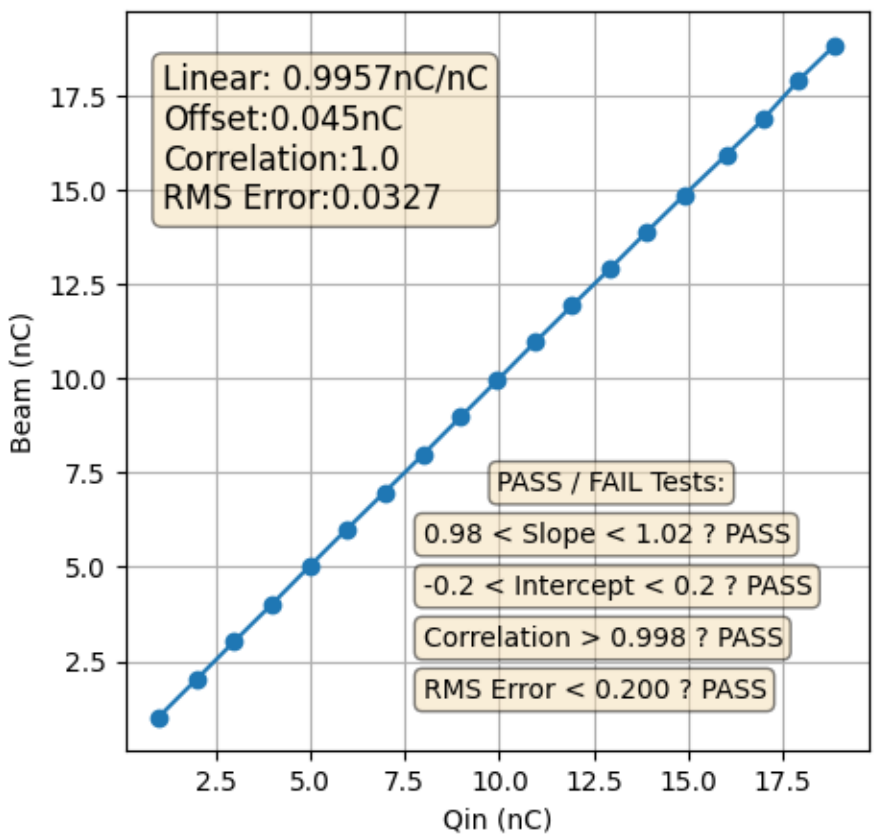
Linear: 0.9957nC/nC
Offset:0.045nC
Correlation:1.0
RMS Error:0.0327
PASS / FAIL Tests:
0.98 < Slope < 1.02 ? PASS
-0.2 < Intercept < 0.2 ? PASS
Correlation > 0.998 ? PASS
RMS Error < 0.200 ? PASS
Beam (nC)
Qin (nC)
2.5
5.0
7.5
10.0
12.5
15.0
17.5

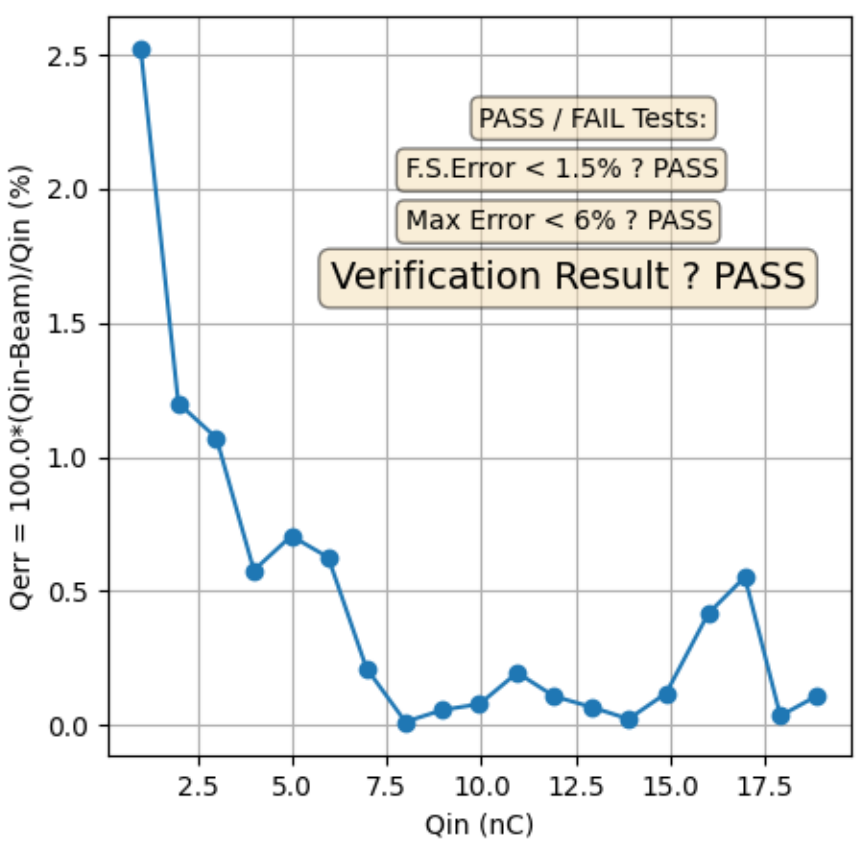
PASS / FAIL Tests:
F.S.Error < 1.5% ? PASS
Max Error < 6% ? PASS
Verification Result ? PASS
Qerr = 100.0*(Qin-Beam)/Qin (%)
Qin (nC)
0.0
0.5
1.0
1.5
2.0
2.5
5.0
7.5
10.0
12.5
15.0
17.5

ACMI Calibration Report Summary

All 3 ICT Ratio Measurement Tests		PASSED
All 9 ACMI Calibration Tests		FAILED
All 9 Inverted Polarity Tests		FAILED
All 14 Verification Tests		PASSED
Procedure Status		FAILED
New PLC Calibration Constants	Quadratic	303
	Linear	99662
	Offset	46

Final Actions to Closeout Procedure

Calibration Constants Updated in PLC?		DONE
PLC Safety Signature Generated?	Status	DONE
	Value	F6A8B43D
PLC Key set to Run Position?		DONE
ACMI Interlock Key Set to Bypass?		DONE
ECN Requested for PLC Changes?		DONE
Procedure: NSLSII-INS-PRC-001 Status?		COMPLETED