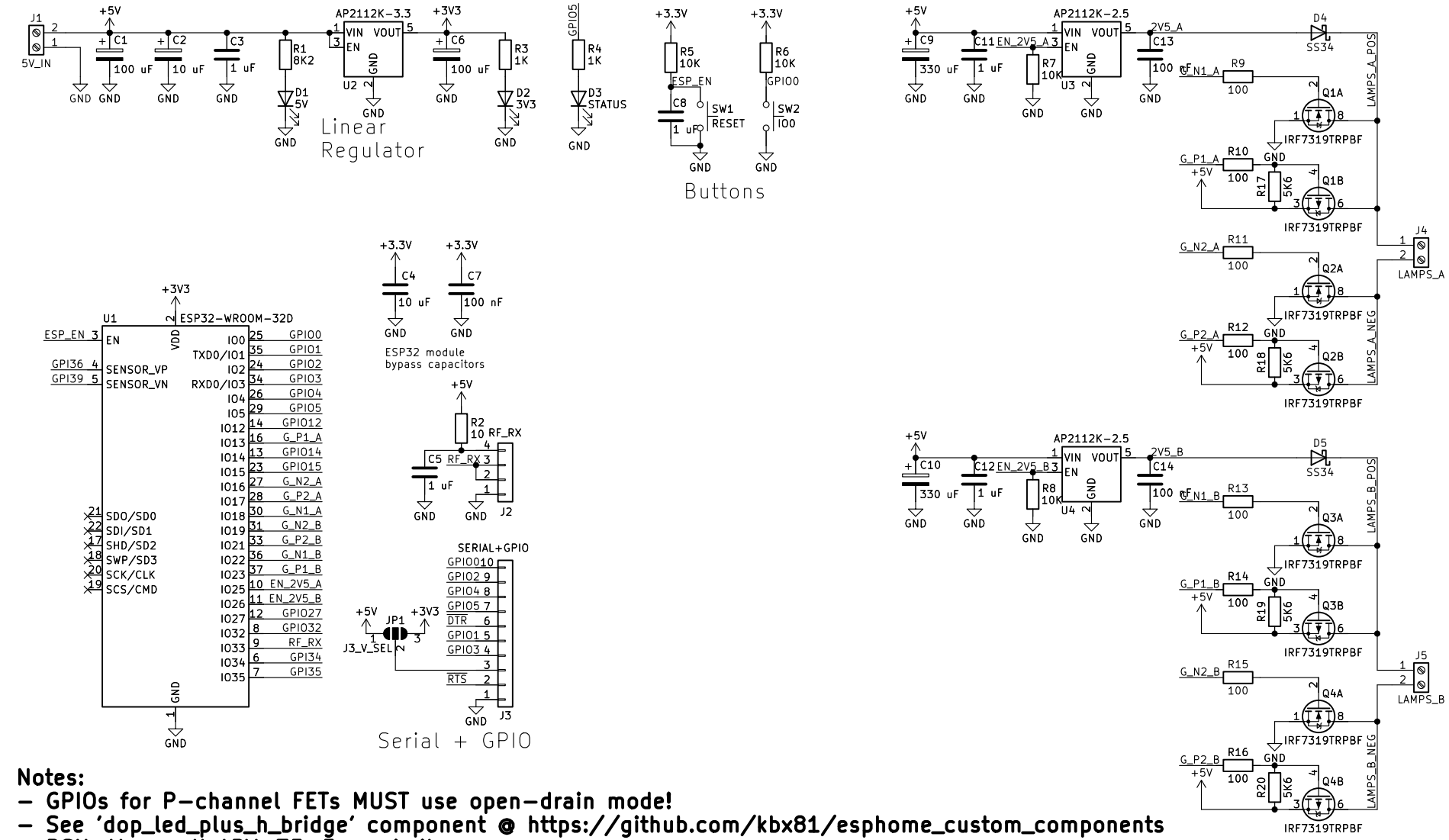

Notes:

- GPIOs for P-channel FETs MUST use open-drain mode!
- See 'dop_led_plus_h_bridge' component @ https://github.com/kbx81/esphome_custom_components
- PSU: Meanwell APV-35-5 or similar

Sheet: /		
File: StringLightsController.kicad_sch		
Title:		
Size: A4	Date:	**Rev:**
KiCad E.D.A. kicad (6.0.11-0)		Id: 1/1