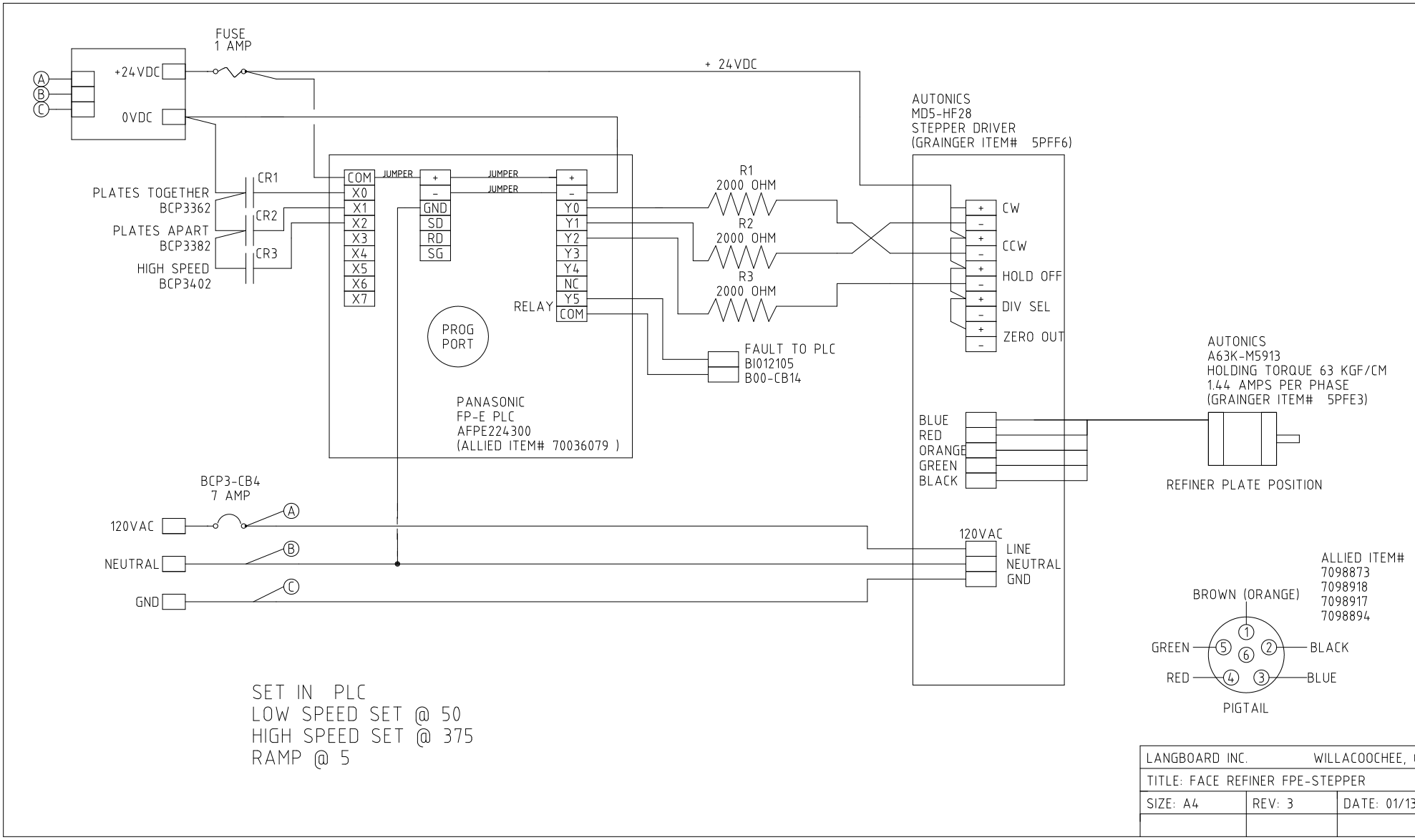
FUSE
1 AMP
+24VDC
0VDC
A
B
C
+ 24VDC
AUTONICS
MD5-HF28
STEPPER DRIVER
(GRAINGER ITEM# 5PFF6)
PLATES TOGETHER
BCP3362
PLATES APART
BCP3382
HIGH SPEED
BCP3402
CR1
CR2
CR3
COM
X0
X1
X2
X3
X4
X5
X6
X7
JUMPER
JUMPER
JUMPER
+
-
GND
SD
RD
SG
Y0
Y1
Y2
Y3
Y4
NC
Y5
COM
RELAY
PROG
PORT
PANASONIC
FP-E PLC
AFPE224300
(ALLIED ITEM# 70036079)
R1
2000 OHM
R2
2000 OHM
R3
2000 OHM
FAULT TO PLC
BI012105
B00-CB14
CW
CCW
HOLD OFF
DIV SEL
ZERO OUT
BLUE
RED
ORANGE
GREEN
BLACK
AUTONICS
A63K-M5913
HOLDING TORQUE 63 KGF/CM
1.44 AMPS PER PHASE
(GRAINGER ITEM# 5PFE3)
REFINER PLATE POSITION
BCP3-CB4
7 AMP
120VAC
NEUTRAL
GND
120VAC
LINE
NEUTRAL
GND
ALLIED ITEM#
7098873
7098918
7098917
7098894
BROWN (ORANGE)
GREEN
BLACK
RED
BLUE
PIGTAIL
SET IN PLC
LOW SPEED SET @ 50
HIGH SPEED SET @ 375
RAMP @ 5
LANGBOARD INC.
WILLACOOCHEE,
TITLE: FACE REFINER FPE-STEPPER
SIZE: A4
REV: 3
DATE: 01/13