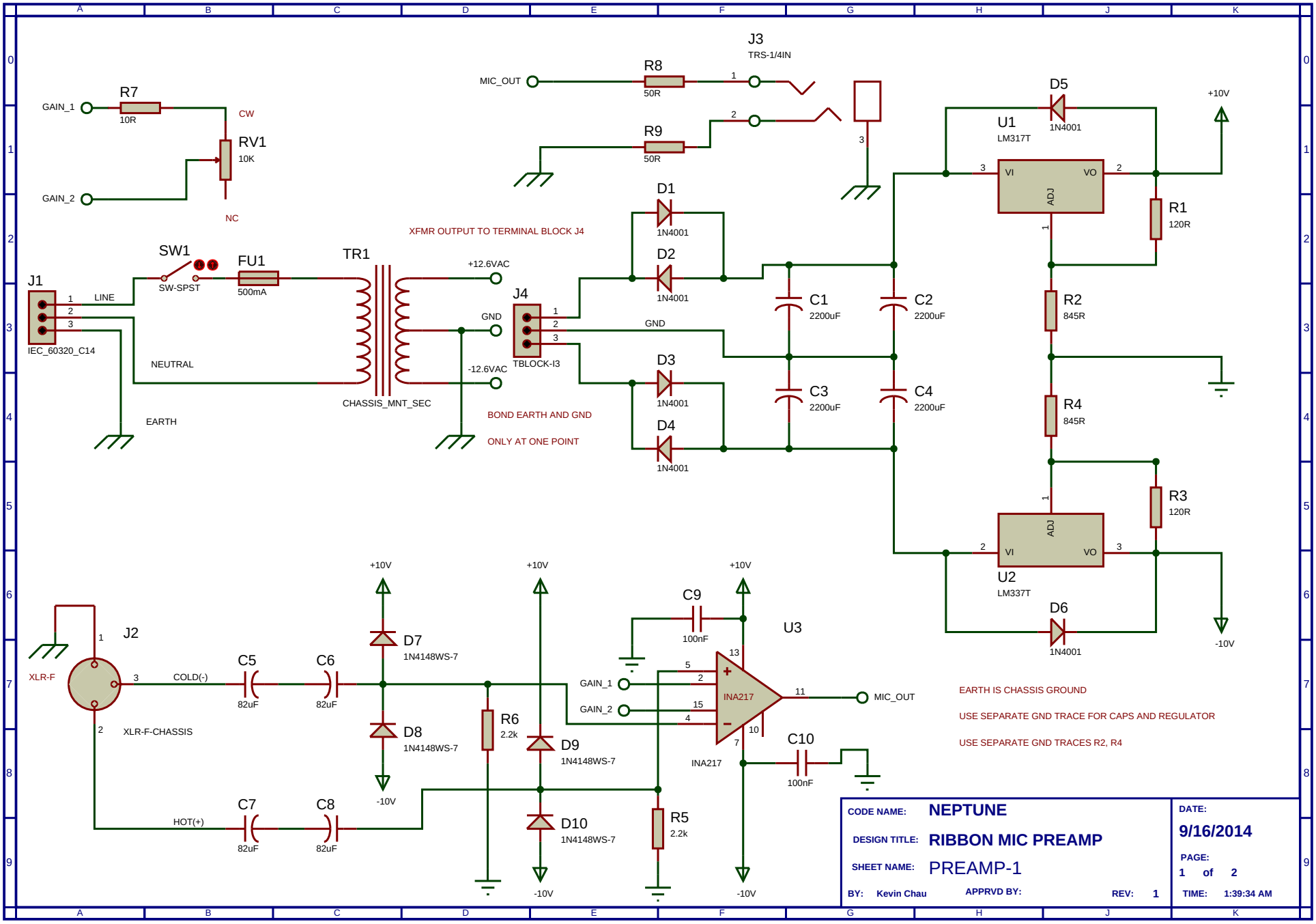
J3
TRS-1/4IN
MIC_OUT
R8
50R
R9
50R
GAIN_1
R7
10R
CW
RV1
10K
GAIN_2
NC
D5
1N4001
U1
LM317T
VI
VO
ADJ
+10V
R1
120R
D1
1N4001
D2
1N4001
XFMR OUTPUT TO TERMINAL BLOCK J4
SW1
SW-SPST
FU1
500mA
TR1
+12.6VAC
J1
LINE
IEC_60320_C14
NEUTRAL
EARTH
CHASSIS_MNT_SEC
GND
-12.6VAC
J4
TBLOCK-I3
GND
C1
2200uF
C2
2200uF
C3
2200uF
C4
2200uF
R2
845R
R4
845R
D3
1N4001
D4
1N4001
BOND EARTH AND GND
ONLY AT ONE POINT
R3
120R
U2
LM337T
D6
1N4001
-10V
J2
XLR-F
XLR-F-CHASSIS
COLD(-)
HOT(+)
C5
82uF
C6
82uF
C7
82uF
C8
82uF
D7
1N4148WS-7
D8
1N4148WS-7
+10V
-10V
R6
2.2k
D9
1N4148WS-7
D10
1N4148WS-7
R5
2.2k
C9
100nF
U3
INA217
GAIN_1
GAIN_2
MIC_OUT
C10
100nF
EARTH IS CHASSIS GROUND
USE SEPARATE GND TRACE FOR CAPS AND REGULATOR
USE SEPARATE GND TRACES R2, R4
CODE NAME: NEPTUNE
DESIGN TITLE: RIBBON MIC PREAMP
SHEET NAME: PREAMP-1
BY: Kevin Chau
APPRVD BY:
REV: 1
DATE: 9/16/2014
PAGE: 1 of 2
TIME: 1:39:34 AM