Kalen Cole Jaroszewski

Austin, TX • (512)-545-9566 • kalen.jaroszewski@outlook.com • LinkedIn: Kalen Cole Jaroszewski

Mini-Quadruped robot

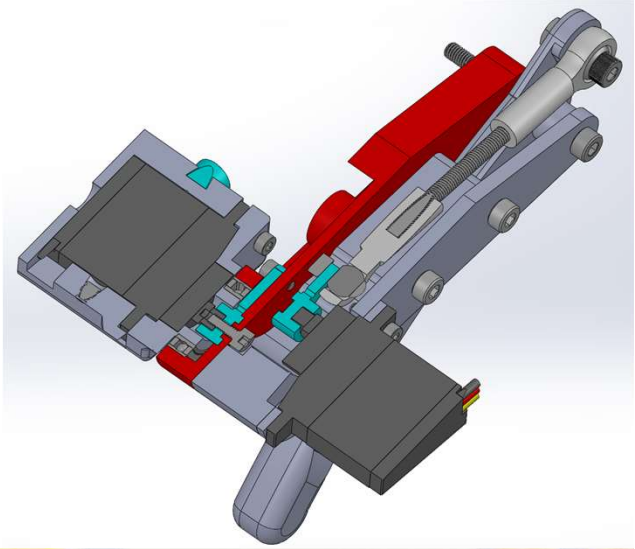

Goals:

- Linear Control
- Bearing supported hip servo
- Two legs support entire robot weight

Specs:

- 180° Hip range of motion
- 6701-2RS 12x18x4mm ball bearing
- Knee bend of 37.46° with 130.72° extension.
- Femur width of 22.85mm
- Three MG92B 3.5kg/cm micro servos per leg
- Electronics: 12 MG92B micro servos, RPi Zero 2W, RPI camera module 3, RPi Servo Bonnet, and 9-DOF IMU

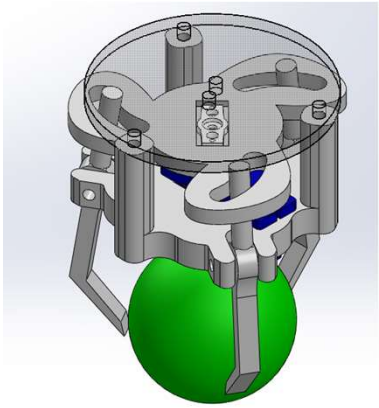

Hatchling Robot

Goals:

- Pick up 1.5in diameter foam balls

Specs:

- Three finger claw end-effector controlled by the rotation of a micro servo
- Custom lazy Susan bearing allows servo rotation of crane system
- Hoist transmission has unused clutch mechanism for future additions
- Crankshaft mechanism used to raise and lower catcher.
- Electronics: 2 SG90 micro servos, Arduino Uno R3, 3 DC motors, 2 L298n motor drivers, HC-05 Bluetooth module.

FTC Robotics 12th grade

- Co-Mechanical Design Lead
- Lead Mechanic
  - Assembly and maintenance
  - Post-processing on in-house CNC parts

Features:

- Virtual four-bar mechanism
- Automated claw via force sensor integration
- 6 powered wheel drive via belt and gears
- Custom floss pick to upright mini-cones in under a second.

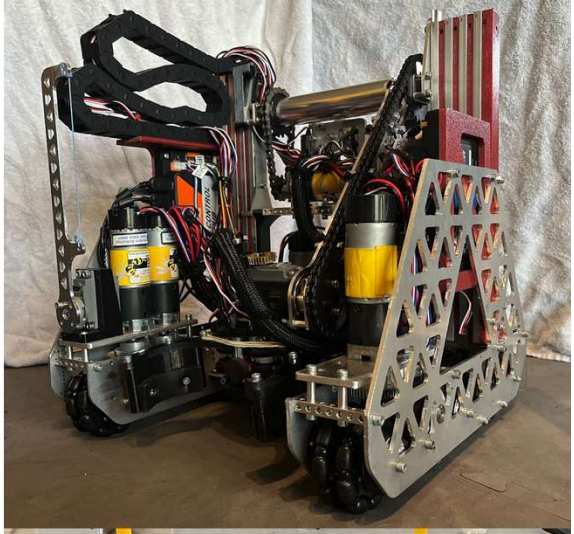

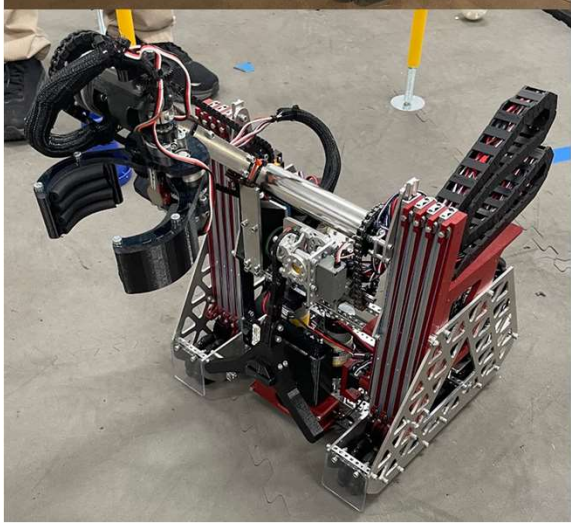

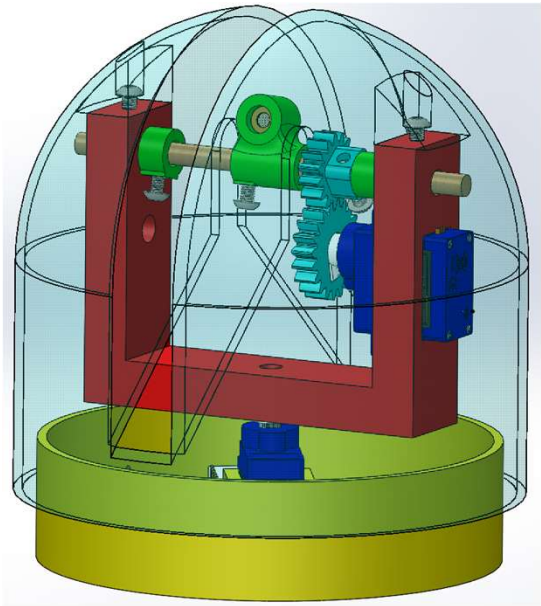

Bluetooth Laser Turret

- 240° Elevation range of motion
- 180° Azimuth range of motion
- All parts have a corresponding drawing with ISO tolerancing
- Soldered all AWG 22 and 24 wires used on project.
- Electronics: 2 SG90 servos, ESP32 Pico, IRLZ44N MOSFET

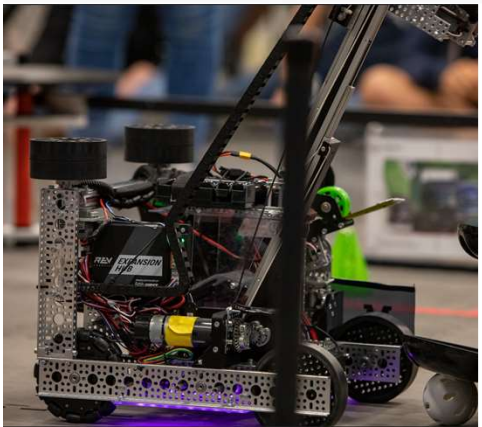

FTC Robotics 11th/8th grade
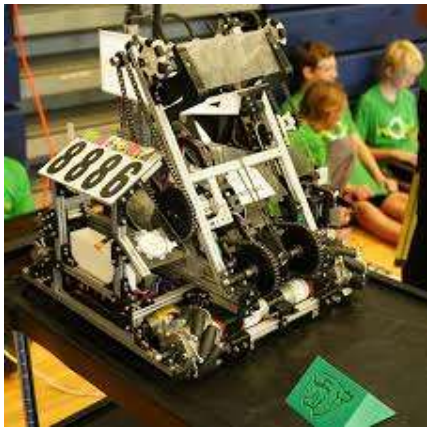
- Both competed at World's (Best international 180 teams)
- Co-Mechanical Design Lead
- Responsible for robot assembly and maintenance .