DC Power Supply with Current Limit

ECEN 350 Project

K. Tolliver & W. Belanger

Introduction:

This project was to design and construct a fixed output DC power supply. A current limiter was used in the output to protect the circuit in case of a short circuit. The current limiter is used as a better option than a fuse because it is reusable and will likely last for years. The current limit was measured at 112 mA. The power supply can be powered by both an AC and DC source. The desired output DC voltage was 5V and the measured output was 4.96V. There is also an LED indicator light to verify the supply is connected to a power source. The LED becomes clearly visible at 15V.

Theory of Operation:

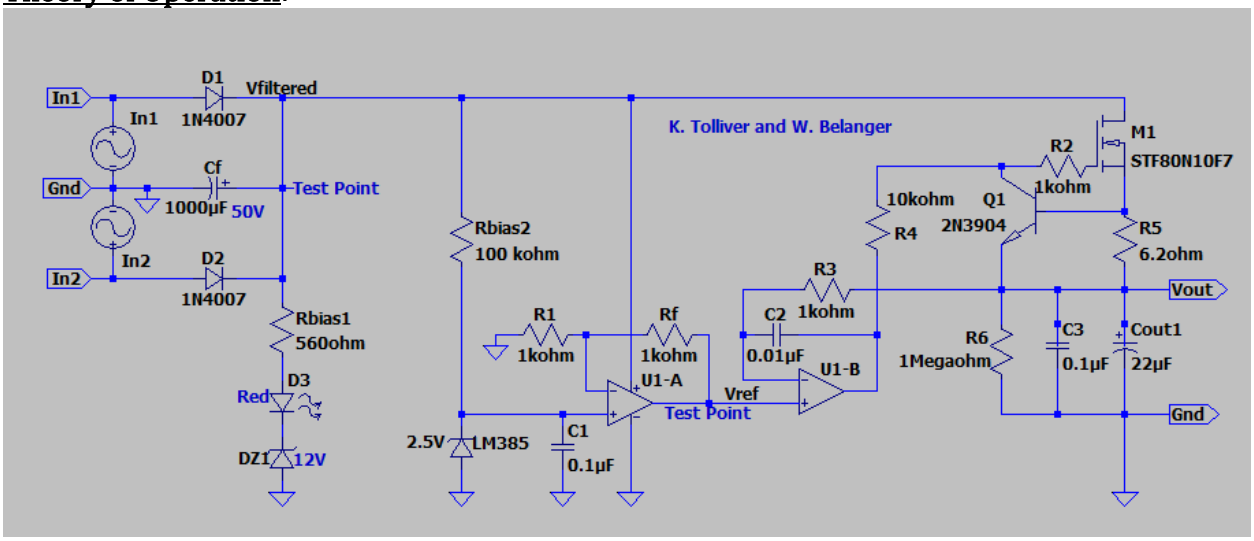

Figure 1: Schematic for a 5V power supply with current limit.

Figure 1 shows the schematic used to create the DC power supply. It is designed to be powered by an AC source but can also be powered by a DC source. As seen in Figure 1, diodes D1 and D2 are intended to be used as a switch. There will be about a 0.7V drop across each diode but it is worth the sacrifice because inputs 'In1' an 'In2' alternate. The diodes help prevent current from entering and overloading one input when the other is high. The diodes in combination with Cf filter out the voltage ripple caused by the periodic variation of the AC source. If left unfiltered, the DC output would also have this variation. Since Cf is in parallel with the diodes D1 and D2 it charges while each input is on. While the inputs alternate, the capacitor discharges to make up for the change in voltage, thus maintaining a more stable DC output voltage. By measuring Vfiltered, we can see that the diodes and Cf are working together to create a constant DC source because Vfiltered is constant. The chosen Cf value will give a maximum ripple voltage of about 887 mV peak to peak.

As seen in Figure 1, diode D3 (red LED) and DZ1 (zener diode) are intended to show the user when the power supply is connected. DZ1 is a 12V zener diode, meaning that when it is reverse biased and has 12V or more across its terminals, then it will be in reverse breakdown region and act as a constant voltage source. In this case, DZ1 will always have 12V or more across it when the power supply is 15V or higher because the filter capacitor supplies a constant voltage. When the filtered voltage is high enough it will always act as a

12V source. This is why the LED will be clearly visible when the voltage source is set to 15V or higher.

Similar to DZ1, LM385 is used as a 2.5V diode. This diode acts as a way of supplying a constant input voltage of 2.5V to op-amp U1-A. No matter the current through the diode, it will hold 2.5V across its terminals. This diode is one of the key components needed to take the AC signal and provide a DC output signal. There will always be 2.5V at that node, so the input voltage to U1-A will always be 2.5V as well (assuming the power supply is connected). The output voltage of U1-A is determined by the ratio of resistors connected to it, similar to how most op-amp closed loop gains are determined. The op-amp configuration used on U1-A is a non-inverting amplifier circuit. The output voltage will be in phase with the input. We can also calculate the gain of this configuration using Equation 1. The desired output was 5V, and the input voltage was 2.5V, so the desired gain (Av) is easily calculated as 2. Using this value as Av, Rf and R1 were calculated to be equal in value, meaning their ratio is 1. 1kOhms was chosen for simplicity because R4 was already chosen to be 1kOhms.

$$Av = 1 + \left(\frac{Rf}{R1}\right) \quad Equation\ (1)$$

Resistor R5 and the npn transistor Q1 are used to along with M1 to limit current. When Q1 turns on, it is going to produce a drain current in M1. The drain current is actually going to be equal to the current limit. Afterwards, the resistor R5 was calculated by using the calculated current limit of 106.5 mA (Table 1) and the total voltage dropped across M1 and Vout. Equation (1.a) is used to calculate the max current with respect to worst case operating temperatures. Equation (1.b) was used to calculate the proper value of R5 to provide the current limit at 106.5 mA. MOSFET M1 also regulates voltage. As the voltage is regulated by M1, then Q1 limits the current that is being passed. These three components limit the current on the output of the power supply.

$$I = \left(\frac{Tj - Ta}{VR\Theta ja}\right) \quad Equation\ (1.a)$$

$$I = \left(\frac{0.66}{R5}\right) \quad Equation\ (1.b)$$

Op-amp U1-B along with MOSFET M1 produce a regulated output voltage. MOSFET M1 draws current from the transformer input to effectively regulate voltage. The current is drawn so the value from the current limit controls what the voltage is regulated to. Op-amp U1-B is used to regulate the voltage by checking the change on the inputs. Op-amp U1-B is wired as a voltage follower which is used to develop a buffer in the power supply. With U1-B wired as a voltage follower the voltage before and after the voltage would be the same voltage, which help M1 draw the current to regulate the voltage.

Measured Performance:

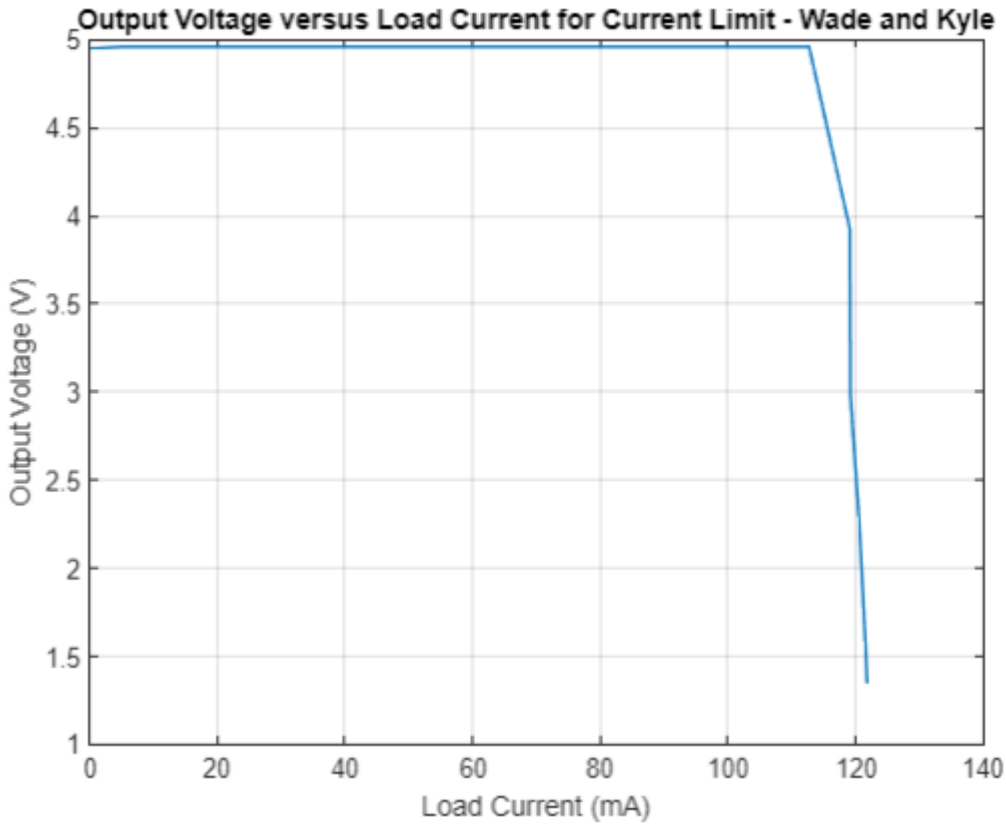

Figure 2: Output Voltage versus Load Current Graph

Figure 2 shows the measured output voltage versus load current. The values for this graph by connecting varying load resistor values across the output . As previously explained in this document, the circuit was designed to have a short circuit current limit to prevent damage. This figure demonstrates the current limiter is functioning properly. As the resistance gets continually smaller, the current hardly changes after it hits a limit. 112mA was the measured current limit, which is within the desired range of the calculated current limit, shown as 106.5mA in Table 1.

Table 1: Measured Values Table

Parameter	Measured Values
Calculated Current Limit Value (mA).	106.50 mA
Measured Current Limit Value (mA).	112.72 mA
Percent error between measured and calculated current limit value, with % Error = $(100)(I_{meas} - I_{calc})/(I_{calc})$.	5.84 % Error
Calculated input voltage ripple for $0.9I_{calc}$.	887 mV pk-pk
Measured input voltage ripple (ΔVfiltered) for the output loaded at approximately 90% of current limit (Vpk-pk).	996 mV pk-pk
Measured output voltage for no external load. (V).	4.96 V
Measured output voltage for regulator loaded at approximately 90% of current limit. (V)	4.96 V
120 Hz Ripple Rejection in dB at 90% of current limit.	66.1 dB
DC input voltage which turns on your LED indicator (V).	14 V
DC input voltage which LED indicator becomes clearly visible (V).	15 V

Table 2: Output Voltage vs Load Current for Current Limit

Current Limit		
Rload (Ohms)	Vout (V)	Load Current (A)
∞	4.95	0
1000	4.96	4.96
500	4.96	9.92
200	4.96	24.8
100	4.96	49.6
77	4.96	64.41558442
66	4.96	75.15151515
55	4.96	90.18181818
51 (90% current limit)	4.96	97.25490196
44	4.96	112.7272727
33	3.93	119.0909091

25	2.98	119.2
19	2.29	120.5263158
13	1.58	121.5384615
11	1.34	121.8181818

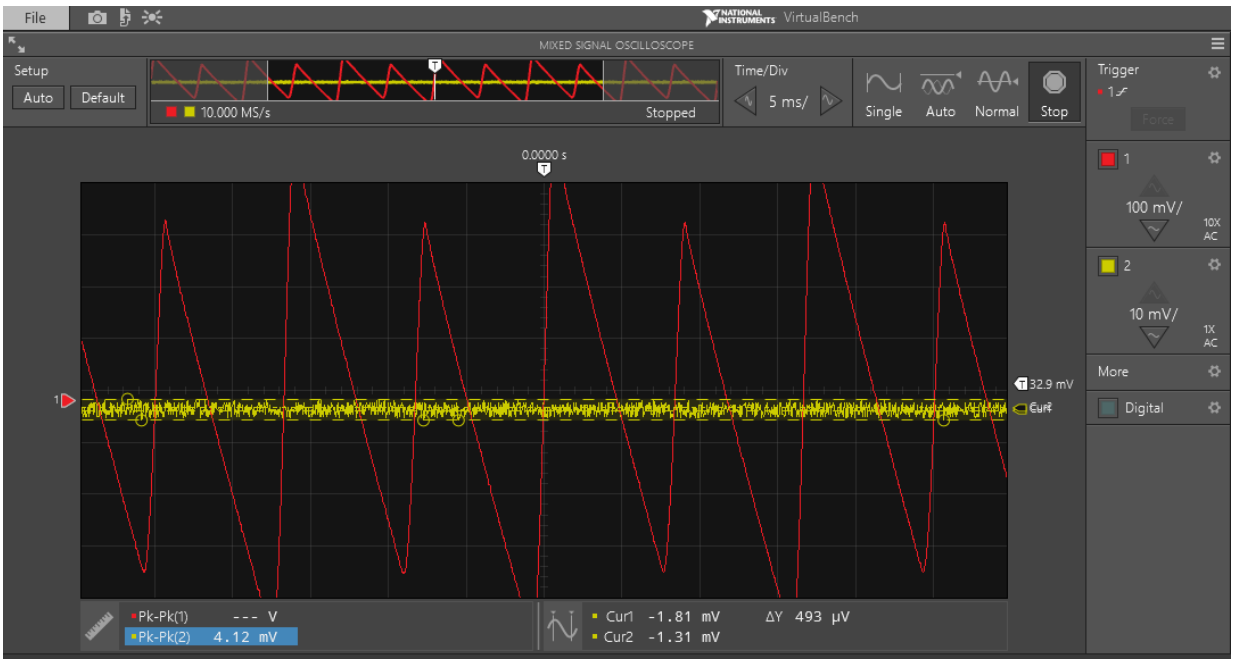

Figure 3: Oscilloscope Screen Capture of output voltage ripple.

Figure 3 shows the screen capture of our oscilloscope readings. The channel 1 (red) signal shows ΔVfiltered which is about 996mV. The channel 2 (yellow) signal shows the results of ΔVout which is about 493µV. These results are desired because it means that the variation in the output voltage signal is very minimal, especially compared to the ripple voltage of the filtered voltage. Since the output ripple is so small, that means that we will have a stable 5V source. The values of ΔVfiltered and ΔVout we were used in Equation (2) to find a Ripple Rejection value of 66.1 dB. Any value above 54dB indicates a properly functioning ripple rejection, so 66dB is an acceptable value.

$$Ripple\ Rejection = 20\left(\frac{\Delta Vfiltered}{\Delta Vout}\right)\ (dB). \qquad Equation\ (2)$$

Discussion and Conclusions:

Figure 4: Top view of the finished power supply project

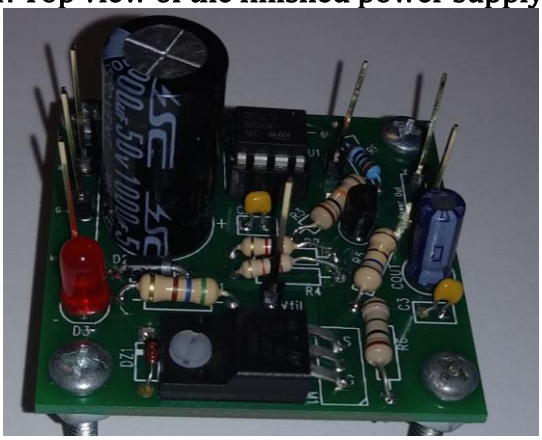

Figure 5: Front view of the finished power supply project

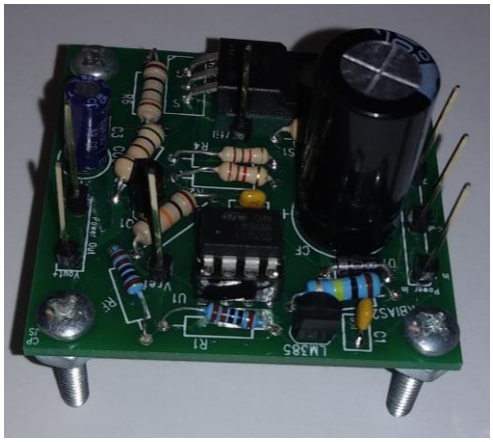

Figure 6: Back view of the finished power supply project

This project taught us how to use various components and incorporate different circuits to create a power supply. Among the several circuits incorporated was an LED circuit to indicate power was on. This circuit applied knowledge learned about zener diodes and how they behave in reverse bias region. It also incorporated limiting the reverse bias current with a resistor to ensure the zener would not overheat under reverse bias conditions. Another circuit analysis skill that we applied to this project was to use the LM385 transistor as a diode. BJT transistors are essentially two diodes, one forward biased and one reverse biased, so we simply connected two of the three pins to use one of the diodes.

The project was a success, with minimal setbacks. The only real setbacks were very trivial. The largest setback we experienced was simply having difficulty soldering smaller components because we soldered large, bulky ones first. Because of the inconvenience this created, an improvement for future projects would be to solder the smaller components first, such as the header pins. Putting them in first would make it easier to solder them, as well as not making it harder to put in the larger ones. When using a through-hole op-amp IC, it is always wise a chassis. Many PCB board designs do this, such as Arduinos, to allow for user error. If the user damages it in any way, either by inserting it backwards or wiring it improperly, it can be switched out with a functional one.