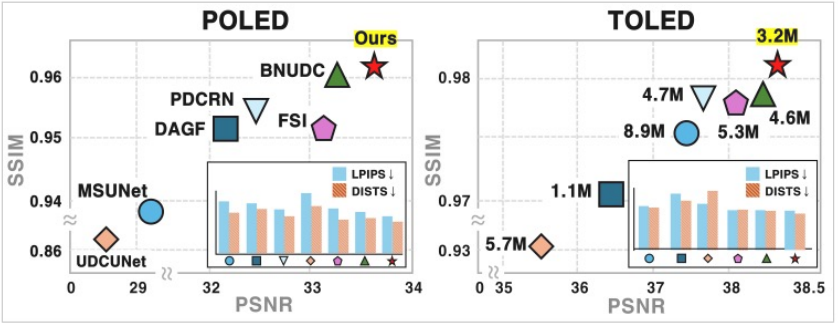
POLED
TOLED
Ours
BNUDC
PDCRN
DAGF
FSI
MSUNet
UDCUNet
3.2M
4.7M
4.6M
8.9M
5.3M
1.1M
5.7M
LPIPS ↓
DISTS ↓
SSIM
PSNR

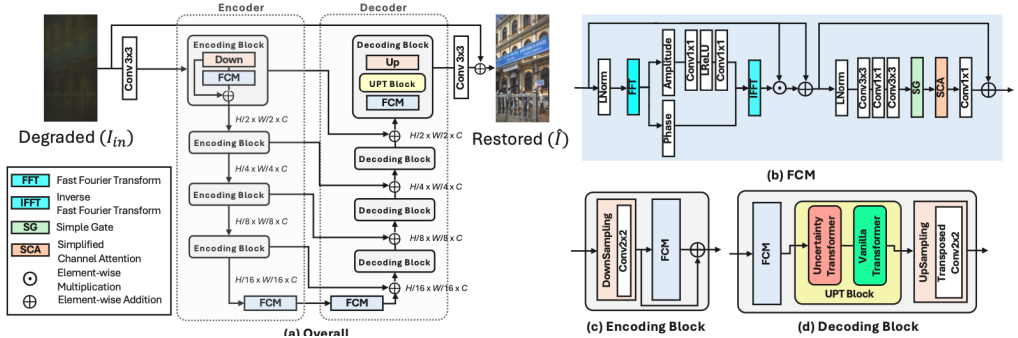
Degraded (I_{in})
Restored ($\hat{I}$)
Encoder
Decoder
Encoding Block
Decoding Block
Down
Up
UPT Block
FCM
Conv 3x3
FFT Fast Fourier Transform
IFFT Inverse Fast Fourier Transform
SG Simple Gate
SCA Simplified Channel Attention
Element-wise Multiplication
Element-wise Addition
(a) Overall
(b) FCM
(c) Encoding Block
(d) Decoding Block
Uncertainty Transformer
Vanilla Transformer
UpSampling
Transposed Conv2x2
DownSampling
Conv2x2

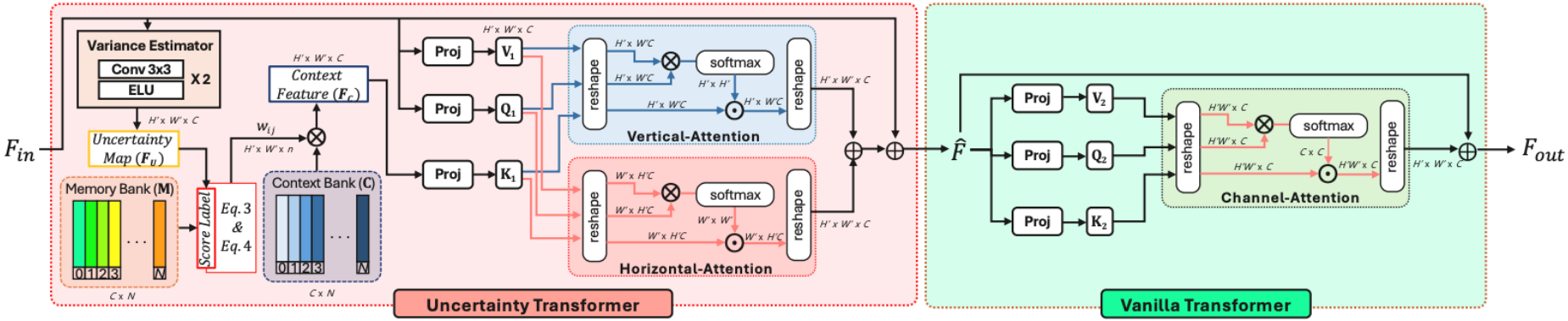
F_{in}
Variance Estimator
Conv 3x3
ELU
X 2
Uncertainty Map (F_u)
Context Feature (F_c)
w_{ij}
Memory Bank (M)
Score Label
Eq. 3 & Eq. 4
Context Bank (C)
Proj
V_1
Q_1
K_1
V_2
Q_2
K_2
reshape
softmax
Vertical-Attention
Horizontal-Attention
Channel-Attention
$\hat{F}$
F_{out}
Uncertainty Transformer
Vanilla Transformer