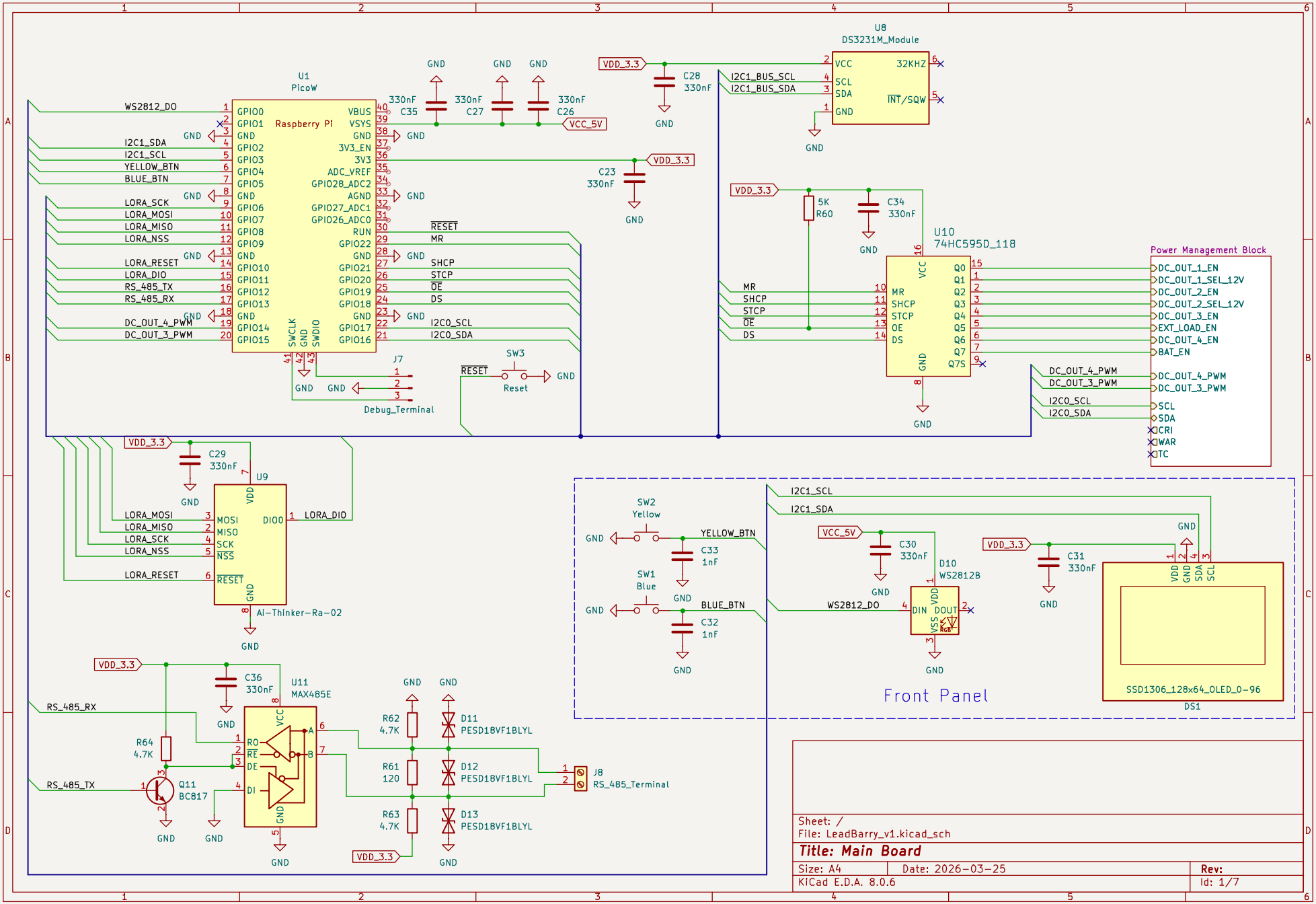
U1
PicoW
Raspberry Pi
U8
DS3231M_Module
U10
74HC595D_118
Power Management Block
U9
Ai-Thinker-Ra-02
U11
MAX485E
Debug_Terminal
Reset
Front Panel
SSD1306_128x64_OLED_0-96
RS_485_Terminal
Sheet: /
File: LeadBarry_v1.kicad_sch
Title: Main Board
Size: A4
Date: 2026-03-25
Rev:
KiCad E.D.A. 8.0.6
Id: 1/7

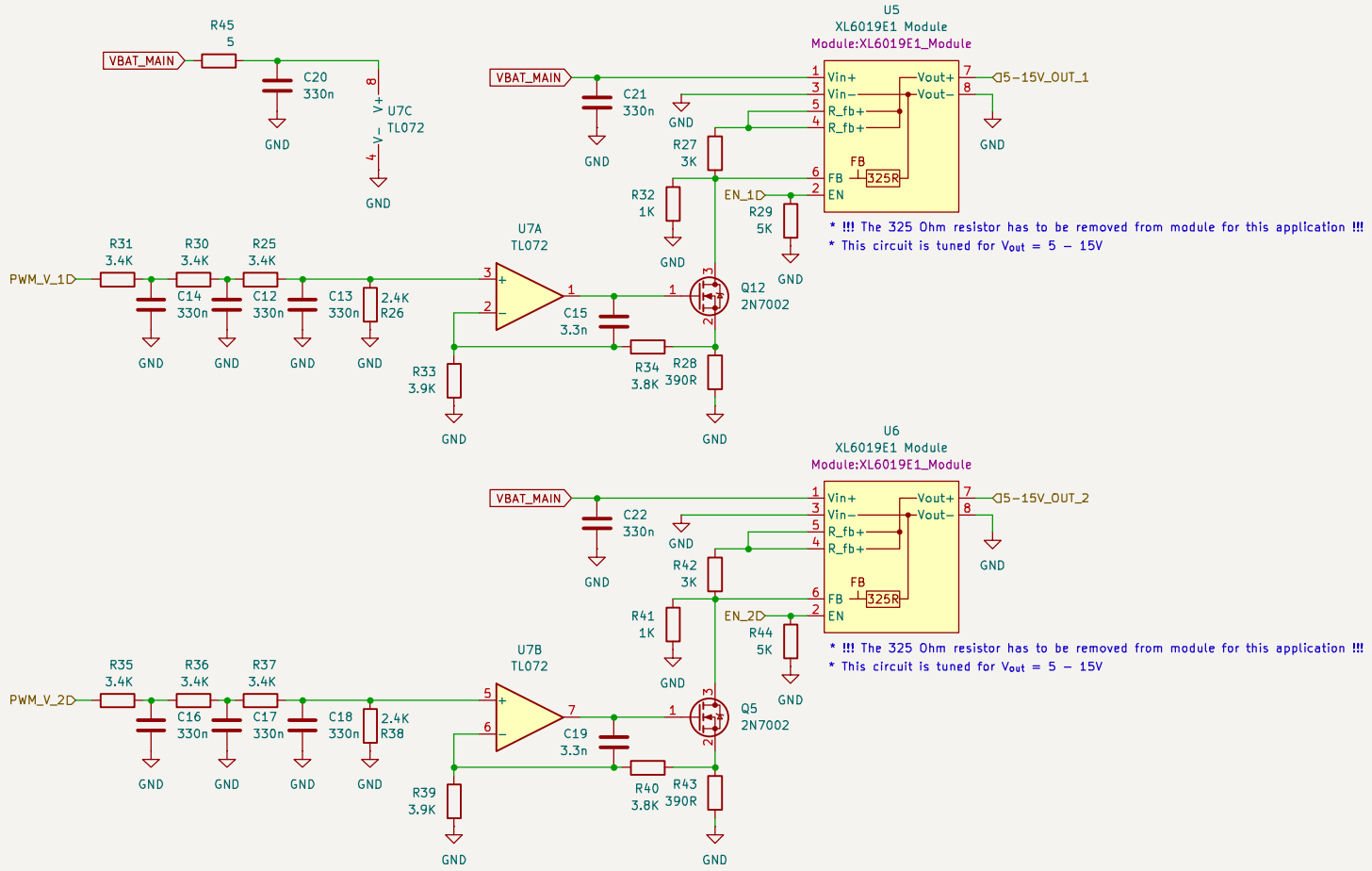

Sheet: /PowerManagementBlock/Regulated Voltage DC DC/
File: RegulatedVoltage_DcDc.kicad_sch

Title: Regulated Voltage DC/DC Converters Block

Size: A4	Date: 2026-03-21	Rev:
KiCad E.D.A. 8.0.6		Id: 2/7

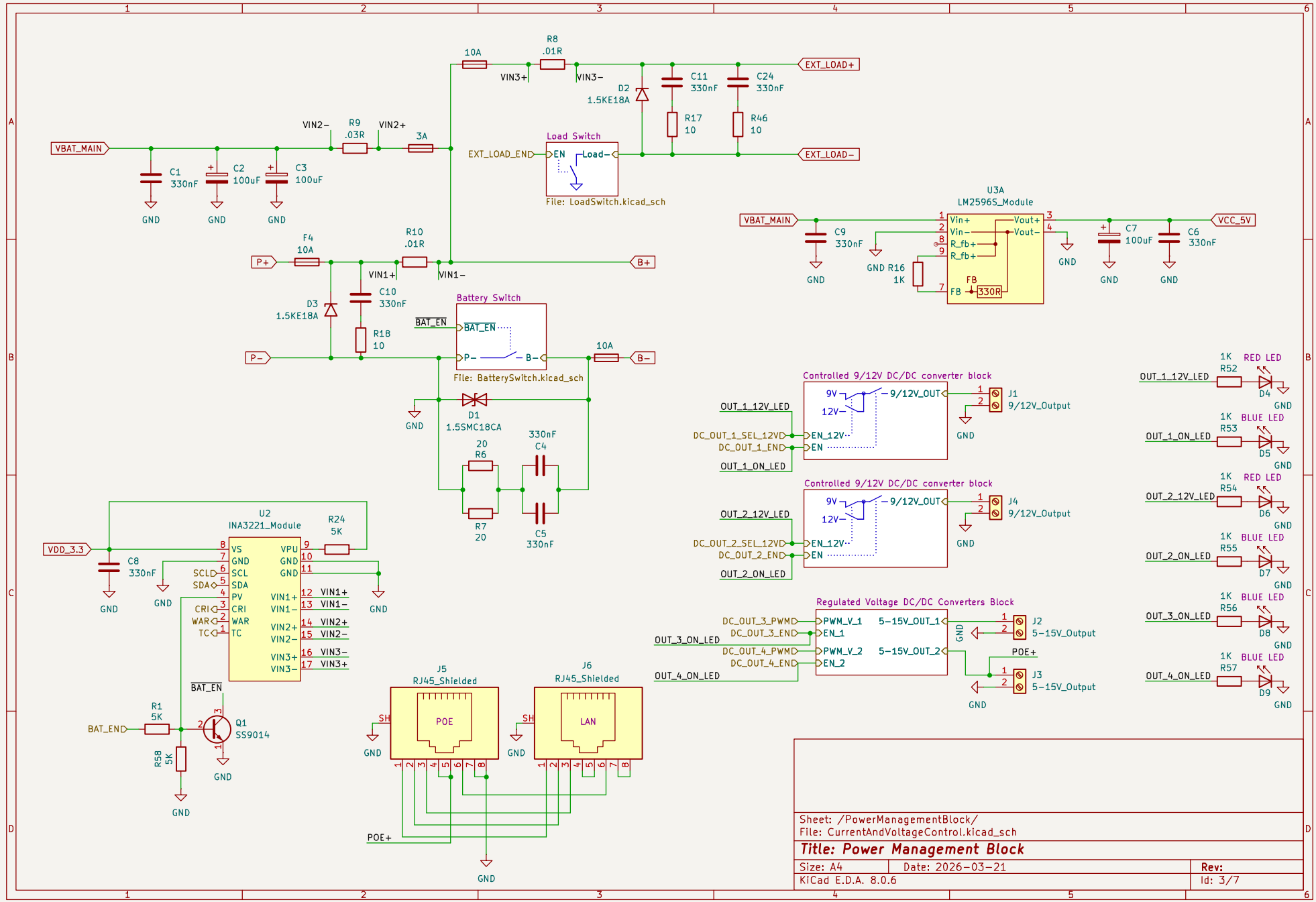
VBAT_MAIN
C1 330nF
C2 100uF
C3 100uF
GND
VIN2−
R9 .03R
VIN2+
3A
10A
R8 .01R
VIN3+
VIN3−
D2 1.5KE18A
C11 330nF
C24 330nF
R17 10
R46 10
EXT_LOAD+
EXT_LOAD−
EXT_LOAD_END
Load Switch
EN
Load−
File: LoadSwitch.kicad_sch
F4 10A
P+
R10 .01R
VIN1+
VIN1−
B+
D3 1.5KE18A
C10 330nF
R18 10
P−
BAT_EN
Battery Switch
P−
B−
File: BatterySwitch.kicad_sch
10A
B−
D1 1.5SMC18CA
20 R6
R7 20
330nF C4
C5 330nF
U3A
LM2596S_Module
Vin+
Vin−
R_fb+
R_fb+
Vout+
Vout−
FB
330R
R16 1K
C9 330nF
C7 100uF
C6 330nF
VCC_5V
U2
INA3221_Module
VDD_3.3
C8 330nF
VS
GND
SCL
SDA
PV
CRI
WAR
TC
VPU
VIN1+
VIN1−
VIN2+
VIN2−
VIN3+
VIN3−
R24 5K
R1 5K
R58 5K
Q1 SS9014
J5
RJ45_Shielded
POE
SH
J6
RJ45_Shielded
LAN
POE+
Controlled 9/12V DC/DC converter block
9V
12V−
9/12V_OUT
EN_12V
EN
OUT_1_12V_LED
DC_OUT_1_SEL_12V
DC_OUT_1_EN
OUT_1_ON_LED
J1 9/12V_Output
OUT_2_12V_LED
DC_OUT_2_SEL_12V
DC_OUT_2_EN
OUT_2_ON_LED
J4 9/12V_Output
Regulated Voltage DC/DC Converters Block
DC_OUT_3_PWM
DC_OUT_3_EN
OUT_3_ON_LED
DC_OUT_4_PWM
DC_OUT_4_EN
OUT_4_ON_LED
PWM_V_1
EN_1
PWM_V_2
EN_2
5−15V_OUT_1
5−15V_OUT_2
J2 5−15V_Output
J3 5−15V_Output
1K R52 RED LED D4
1K R53 BLUE LED D5
1K R54 RED LED D6
1K R55 BLUE LED D7
1K R56 BLUE LED D8
1K R57 BLUE LED D9
Sheet: /PowerManagementBlock/
File: CurrentAndVoltageControl.kicad_sch
Title: Power Management Block
Size: A4
Date: 2026−03−21
Rev:
KiCad E.D.A. 8.0.6
Id: 3/7

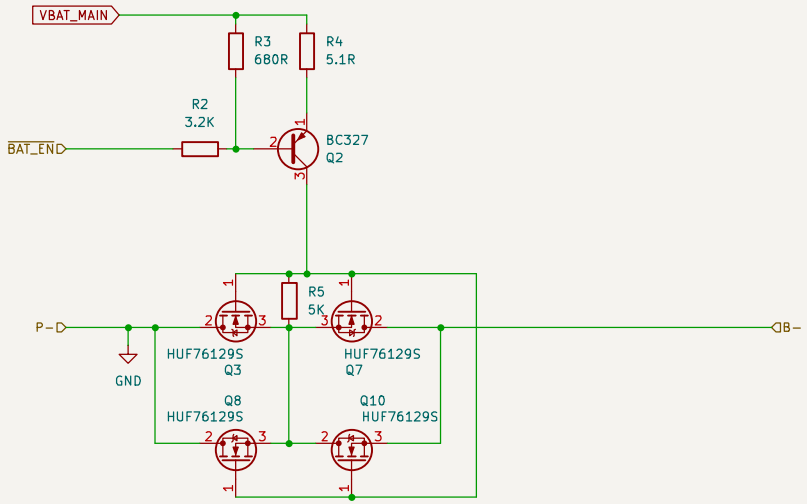

Sheet: /PowerManagementBlock/BatterySwitch/
File: BatterySwitch.kicad_sch

Title: Battery Switch

Size: A4	Date: 2026-03-21	Rev:
KiCad E.D.A. 8.0.6		Id: 3/7

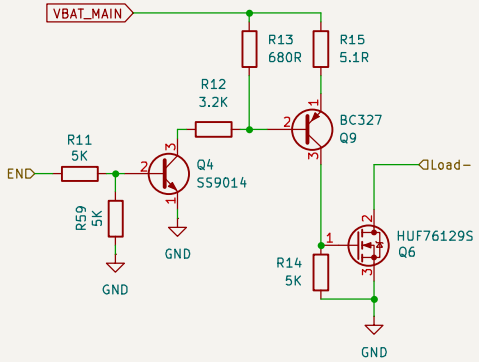

Sheet: /PowerManagementBlock/LoadSwitch/
File: LoadSwitch.kicad_sch

Title: Load Switch

Size: A4	Date: 2026-03-21	Rev:
KiCad E.D.A. 8.0.6		Id: 4/7

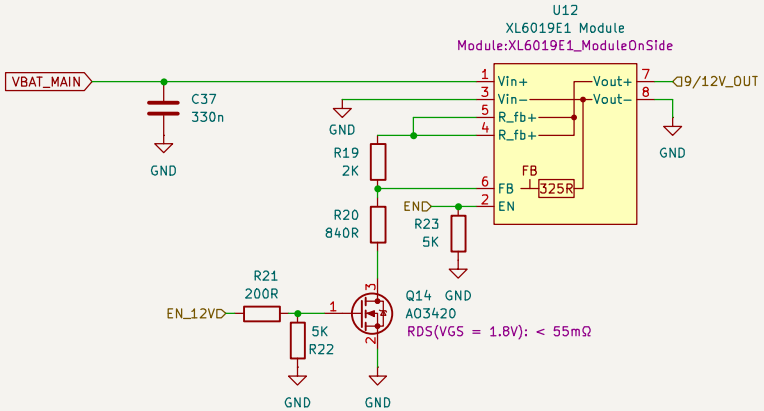

Sheet: /PowerManagementBlock/ControlledDcDc/
File: ControlledDcDc.kicad_sch

Title: Controlled 9/12V DC/DC Converter Block

Size: A4	Date: 2026-03-21	Rev:
KiCad E.D.A. 8.0.6		Id: 5/7

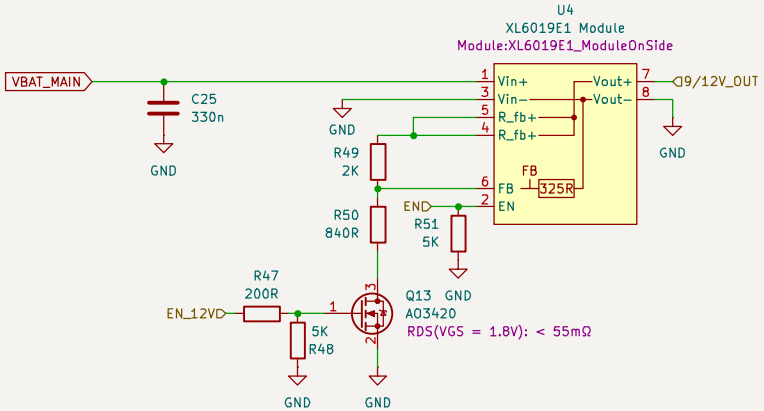

Sheet: /PowerManagementBlock/ControlledDcDc1/
File: ControlledDcDc.kicad_sch

Title: Controlled 9/12V DC/DC Converter Block

Size: A4	Date: 2026-03-21	Rev:
KiCad E.D.A. 8.0.6		Id: 6/7