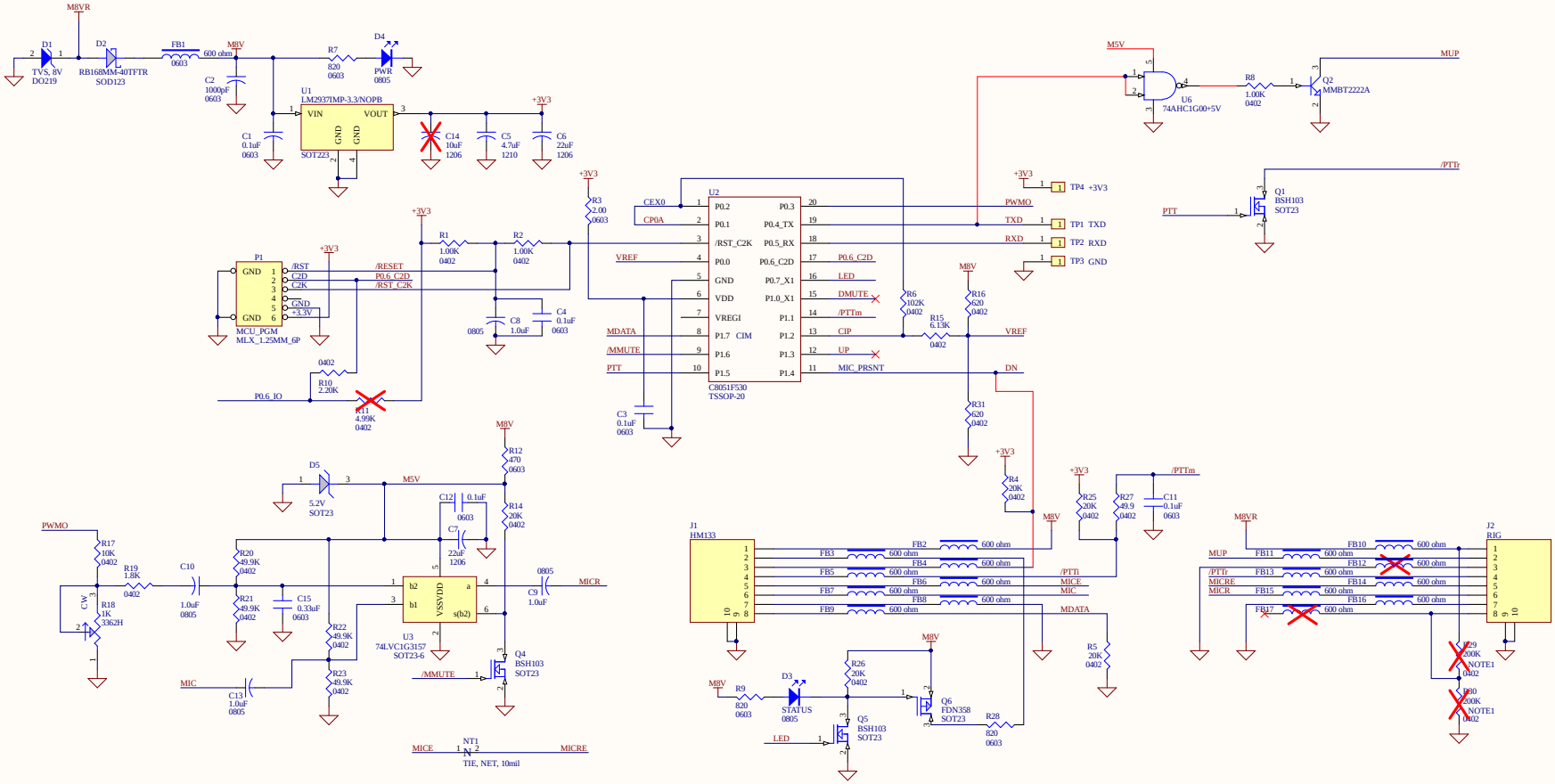

Title	HM133 DTMF Adapter, Wired-Remote	
Size C	Number HM133_DTMF_sch	Revision 001B
Date: 01/06/2024	Sheet of	
File: C:\Users\..\HM133_DTMF.SchDoc	Drawn By:	