For ESP32 use Cheap Yellow Display 2.4 inches

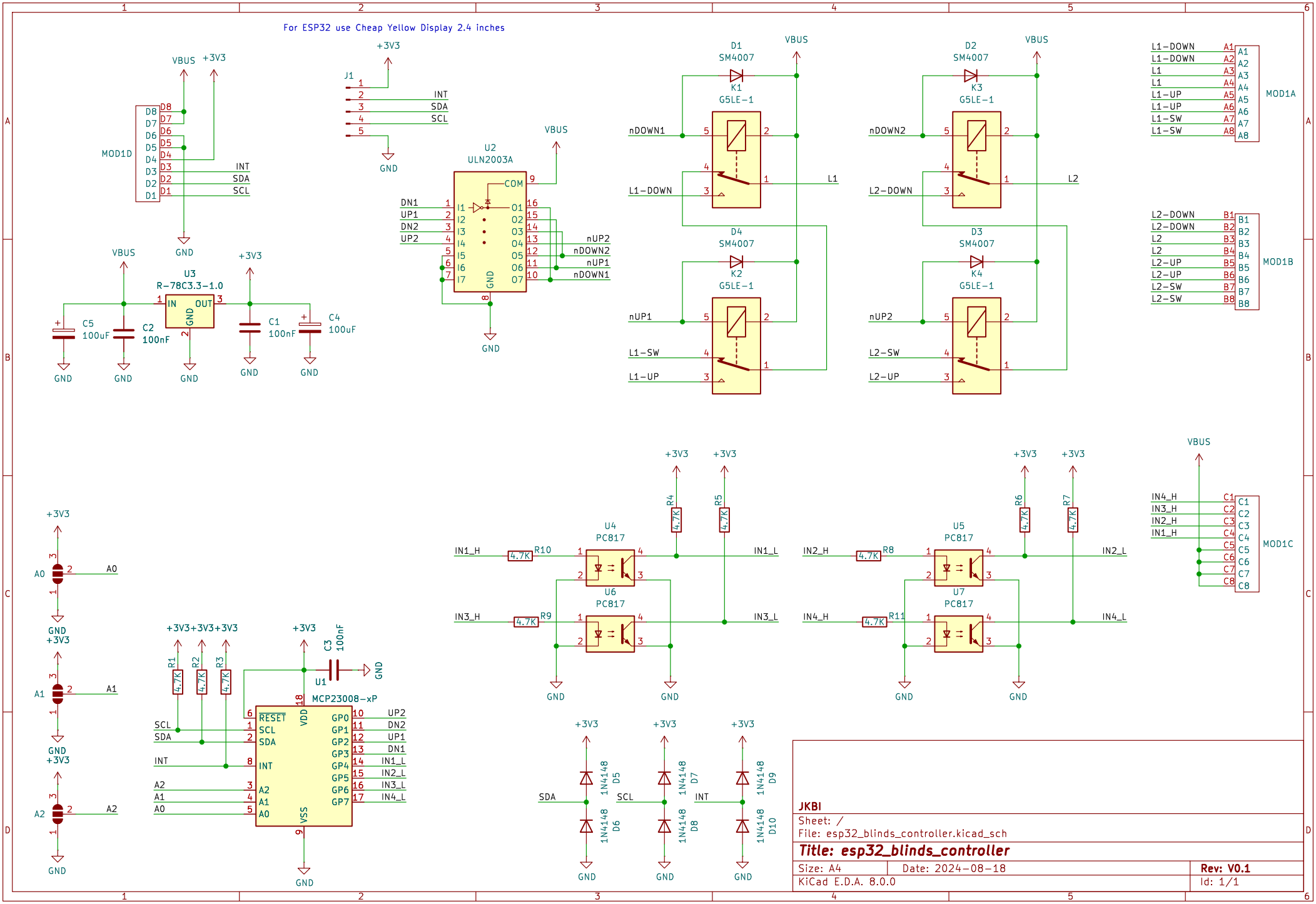

JKBI

Sheet: /

File: esp32_blinds_controller.kicad_sch

Title: esp32_blinds_controller

Size: A4	Date: 2024-08-18	Rev: V0.1
KiCad E.D.A. 8.0.0		Id: 1/1