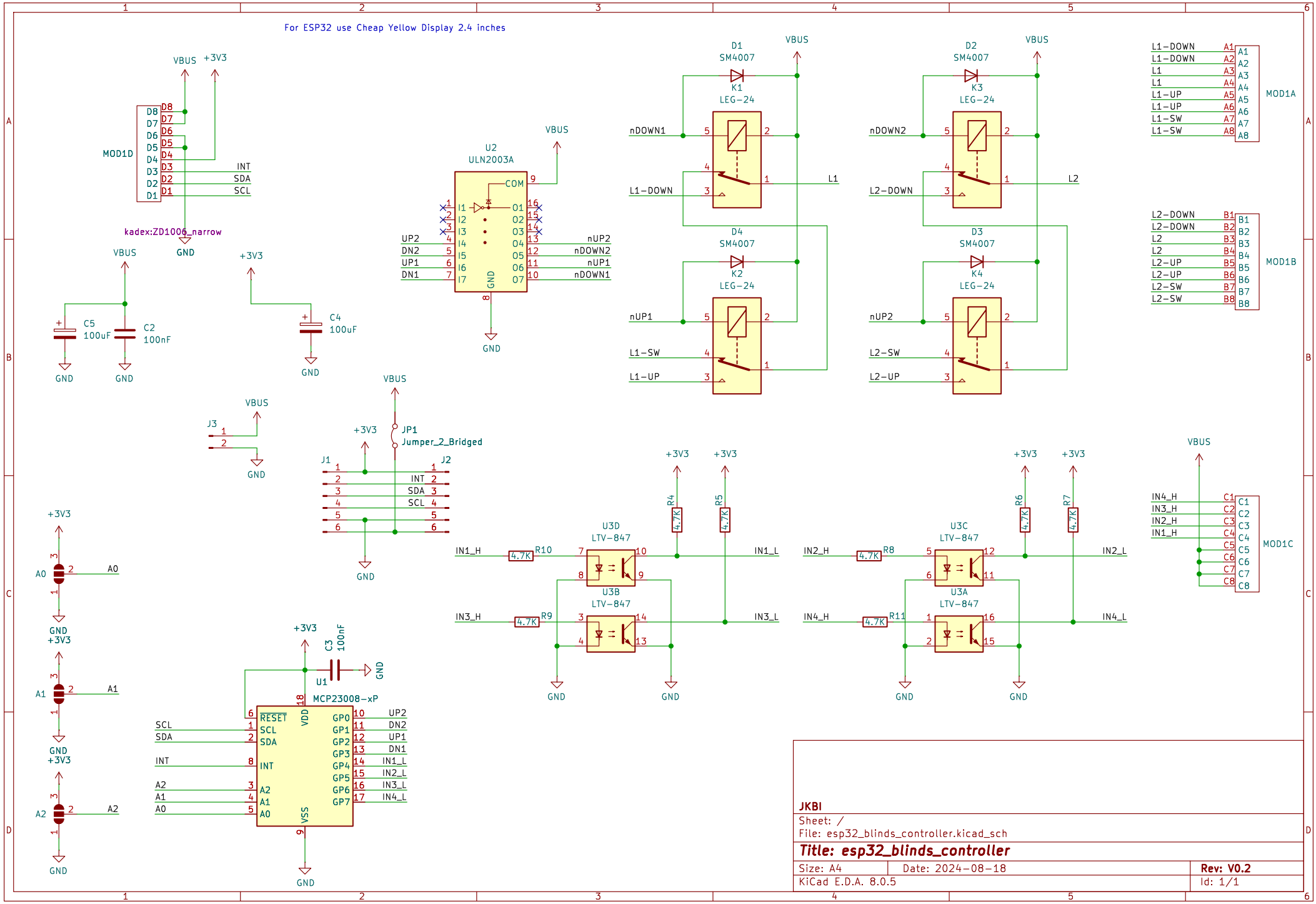
For ESP32 use Cheap Yellow Display 2.4 inches
MOD1D
kadex:ZD1006_narrow
VBUS
+3V3
GND
INT
SDA
SCL
C5 100uF
C2 100nF
C4 100uF
U2 ULN2003A
COM
UP2
DN2
UP1
DN1
nUP2
nDOWN2
nUP1
nDOWN1
D1 SM4007
K1 LEG-24
D2 SM4007
K3 LEG-24
D4 SM4007
K2 LEG-24
D3 SM4007
K4 LEG-24
nDOWN1
L1-DOWN
L1
nUP1
L1-SW
L1-UP
nDOWN2
L2-DOWN
L2
nUP2
L2-SW
L2-UP
MOD1A
MOD1B
MOD1C
J3
JP1 Jumper_2_Bridged
J1
J2
A0
A1
A2
U1 MCP23008-xP
RESET
VDD
VSS
GP0
GP1
GP2
GP3
GP4
GP5
GP6
GP7
C3 100nF
IN1_H
IN1_L
IN2_H
IN2_L
IN3_H
IN3_L
IN4_H
IN4_L
R4 4.7K
R5 4.7K
R6 4.7K
R7 4.7K
R8 4.7K
R9 4.7K
R10 4.7K
R11 4.7K
U3D LTV-847
U3B LTV-847
U3C LTV-847
U3A LTV-847
JKBI
Sheet: /
File: esp32_blinds_controller.kicad_sch
Title: esp32_blinds_controller
Size: A4
Date: 2024-08-18
Rev: V0.2
KiCad E.D.A. 8.0.5
Id: 1/1