scientific reports

Check for updates

OPEN

A lightweight adaptive image deblurring framework using dynamic convolutional neural networks

Xianqiu Zheng[1,2]✉, Yujian Li[1,3], Yujie Zhu[3], Huaiyu Zhao[3] & Peilin Huo[3]

Image deblurring remains a fundamental challenge in computer vision, particularly for Lightweight models facing Limited input adaptability and inadequate global context modeling. This paper proposes a Lightweight adaptive image deblurring framework based on dynamic convolutional neural networks, featuring three core modules to enhance adaptability, global context modeling, and multi-scale feature fusion: 1) The Shallow Adaptive Feature Module (SAFM) employs dynamic convolution to adjust kernel weights according to input characteristics, improving adaptability to diverse blur patterns; 2) The Attention Feature Conditioning Module (AFCM) incorporates a Simple Spatial Attention (SSA) mechanism, which captures global context via 1D spatial pooling while preserving spatial location information, enhancing the model's capability to model long-range dependencies; 3) The Multi-Scale Attention Fusion (MAF) module dynamically weights cross-level features using global attention, enabling efficient hierarchical feature aggregation. Experiments show that the proposed framework achieves competitive PSNR and SSIM performance compared to other lightweight models on the GoPro and HIDE datasets, while maintaining relatively low computational complexity, thus offering a practical solution for intelligent applications.

Keywords Image deblurring, Lightweight adaptive framework, Dynamic convolutional neural networks, SAFM, SSA, MAF

Image deblurring is a pivotal task in computer vision, aiming to restore sharp images from blurred counterparts caused by factors such as camera shake, object motion, or optical defocus[1]. Its applications span diverse domains–autonomous driving[2], medical imaging[3], and surveillance systems[4]–where high-quality visual data is essential for accurate decision-making. Despite significant advancements in deep learning-based methods[5], existing approaches often face a fundamental trade-off between model complexity and performance, particularly in resource-constrained scenarios[6]. Lightweight models, while computationally efficient[7], frequently suffer from limited input adaptivity and inadequate global context modeling[8], leading to suboptimal restoration quality under diverse blur patterns[9]. Traditional deblurring methods, such as Wiener filtering[10] and variational models[11], rely on handcrafted priors and predefined blur kernels, lacking the flexibility to handle complex real-world scenarios[12]. Deep learning approaches, especially convolutional neural networks (CNNs), have revolutionized the field by learning blur patterns directly from data[13]. However, most lightweight CNN architectures employ fixed convolution kernels and shallow receptive fields[14], restricting their adaptability to diverse inputs and ability to capture long-range dependencies[15]. For example, MIMOUNet[16] utilizes multi-scale feature fusion but lacks dynamic adaptation mechanisms, while Restormer[17] leverages channel-wise self-attention at the expense of spatial localization accuracy.

To address these limitations, we propose a lightweight adaptive image deblurring framework that integrates dynamic convolutional neural networks with attention mechanisms. Our contributions are threefold:

Shallow Adaptive Feature Module (SAFM): A dynamic convolution-based module that adaptively adjusts feature extraction kernels according to input characteristics, enhancing adaptability to various blur patterns.

Simple Spatial Attention (SSA): A lightweight attention mechanism that preserves spatial structures while modeling global context, addressing the long-range dependency deficiency of local convolutions.

[1]School of Computer Science and Information Security, Guilin University of Electronic Technology, Guilin 541004, China. [2]Department of Big Data and Intelligent Engineering, Shanxi Institute of Technology, Yangquan 045000, China. [3]School of Artificial Intelligence, Guilin University of Electronic Technology, Guilin 541004, China. ✉email: 2267555949@qq.com

Content courtesy of Springer Nature, terms of use apply. Rights reserved

Multi-Scale Attention Fusion (MAF): A hierarchical fusion module aggregating multi-scale features through attention-guided weighting, enabling efficient cross-scale feature integration.

Related works

Deep learning has dominated recent advances in image deblurring. Early works such as DeepDeblur[1] introduced end-to-end convolutional neural networks (CNNs) to directly learn blur-to-sharp mappings. Subsequent methods focused on multi-scale architectures (e.g., MIMOUNet[16]) and Transformer-based models (e.g., Restormer[17]), where the former enhances scale robustness through multi-input multi-output designs, and the latter leverages self-attention to model long-range dependencies. However, these approaches often prioritize performance over efficiency, leading to high computational costs that are unsuitable for real-time applications[18].

Efforts to balance efficiency and performance include MobileDeblur[19], which employs depthwise separable convolutions to reduce computation, and FastDeBlur[20], which utilizes knowledge distillation for model compression. While these models decrease computational overhead[21], their fixed kernel designs often compromise adaptability to diverse blur patterns[22], limiting generalization in complex input scenarios[23].

Dynamic convolution techniques, such as CondConv[24] and DyConv[13], enable adaptive feature extraction by generating input-dependent kernels, significantly improving model adaptability to different blur types. Attention mechanisms like CBAM[25] and SE-Net[26] enhance feature representation by focusing on critical regions, boosting sensitivity to crucial semantic information. However, existing deblurring frameworks rarely integrate dynamic convolution and attention mechanisms cohesively–excessive parameterization in dynamic convolution may increase computational load[27]. In contrast, global pooling in attention often loses spatial details[28], resulting in either high complexity or limited adaptability[29].

Current lightweight models face two critical challenges: (1) limited input adaptivity due to fixed kernels that struggle to generalize across diverse blur patterns[30]; (2) insufficient global context modeling from stacked local convolutions failing to capture long-range dependencies[31]. To address these gaps, our work integrates dynamic convolution with lightweight attention mechanisms[18], enabling a computationally efficient solution that synergistically enhances both input adaptivity and global context modeling[32].

Methodology

We propose a lightweight adaptive image deblurring framework based on a multi-scale encoder-decoder architecture. It integrates dynamic convolution, attention mechanisms, and multi-scale feature fusion to enhance adaptivity, global context modeling, and efficiency. This section presents the overall architecture, key modules, and loss design.

Network architecture

Inspired by MIMOUNet[16], our model adopts a three-level multi-scale fusion backbone. As shown in Fig. 1, each level comprises a Self-Adaptive Feature Module (SAFM) for adaptive feature extraction, Encoding Blocks (EB) for deep feature learning, Decoding Blocks (DB) for progressive reconstruction, a Feature Attention Module (FAM) for scale interaction, and a Multi-scale Aggregation Fusion module (MAF) for global feature fusion.

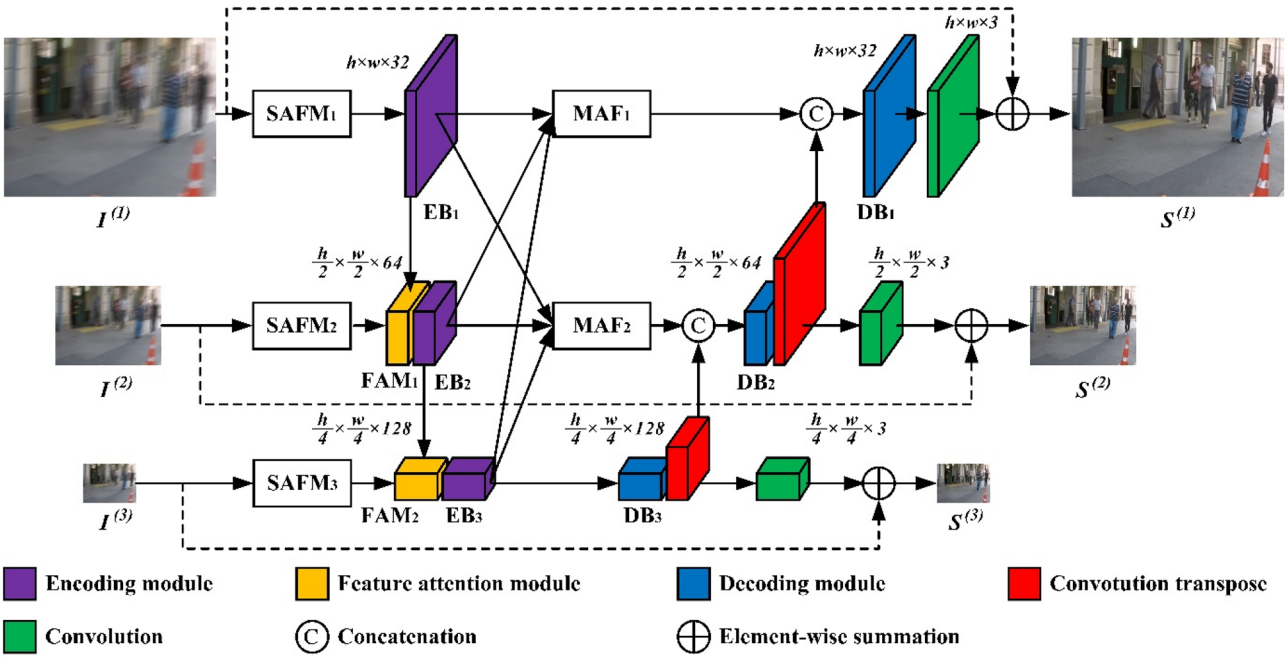

Fig. 1. Multi-scale image deblurring architecture.

Content courtesy of Springer Nature, terms of use apply. Rights reserved

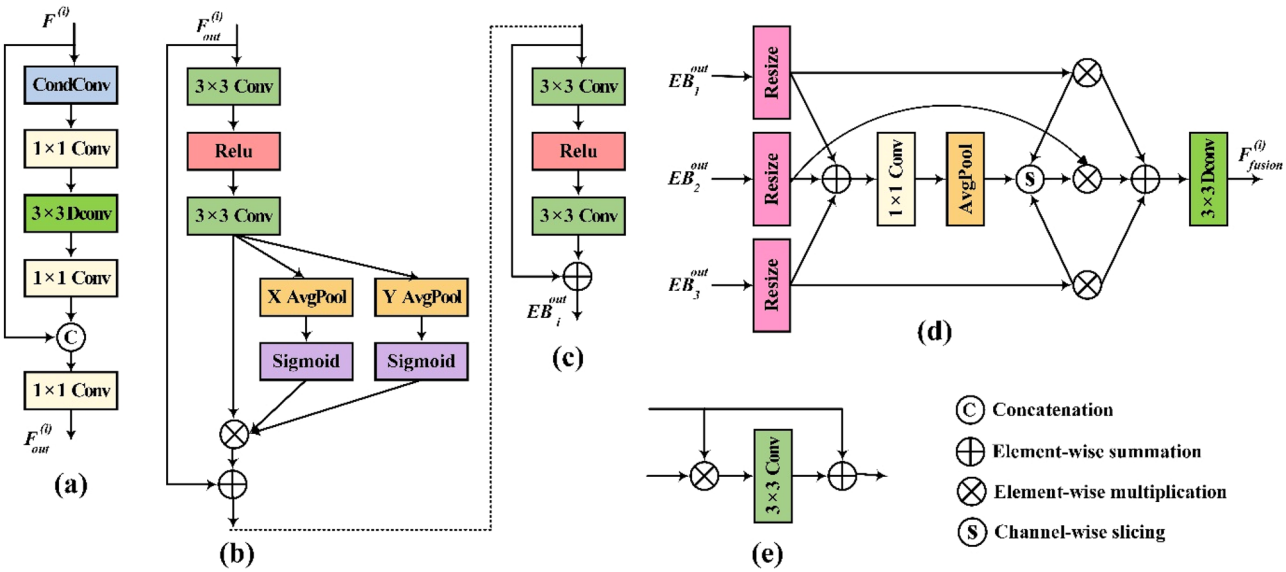

Fig. 2. Structures of sub-modules: (**a**) SAFM, (**b**) AFCM, (**c**) Residual Module, (**d**) MAF, (**e**) FAM.

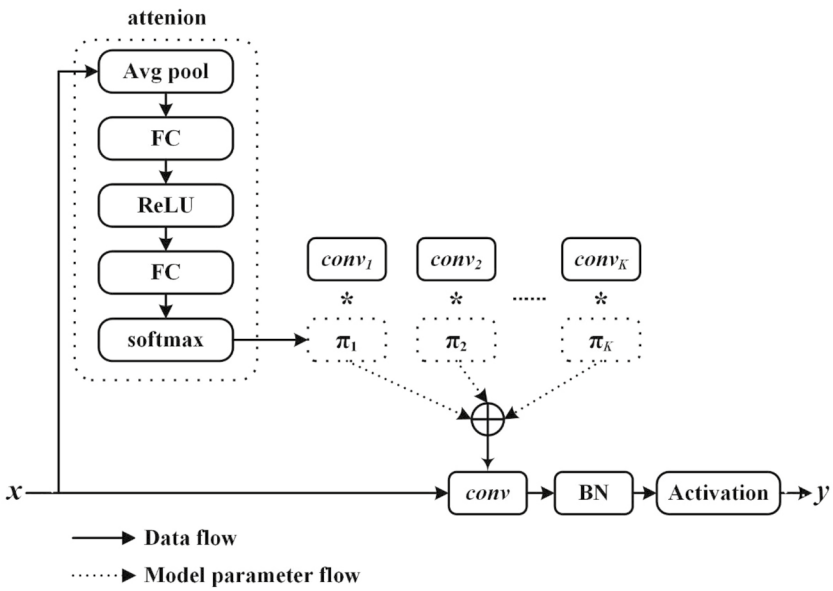

Fig. 3. Basic principle of dynamic convolution.

Processing flow

The blurry input $I^{(1)}$ is downsampled twice to generate $I^{(2)}$ and $I^{(3)}$. SAFM extracts features $F^{(1)}$, $F^{(2)}$, and $F^{(3)}$ at each scale. EB1 processes $F^{(1)}$ to obtain E_1^{out}, which is downsampled and fused with FAM1 before passing through EB2 to yield E_2^{out}; EB3 outputs E_3^{out}. MAF modules merge multi-scale features into F_{fusion}. DB3 upscales and processes E_3^{out}, combines it with E_2^{out} in DB2, and then with E_1^{out} in DB1 to reconstruct the final image. Residual connections refine outputs at each decoding stage.

Key modules

SAFM

SAFM (Fig. 2(a)) boosts adaptability to blurred images via dynamic convolution. After evaluating CondConv, DyConv, ODConv, CondConv is chosen for SAFM due to its high adaptability and low complexity, enabling efficient kernel selection.

As a conditional convolution, CondConv uses learned sub - kernels and a gating mechanism to generate attention weights $(\pi_1, \pi_2, \ldots, \pi_K)$ dynamically, achieving weighted kernel selection (mechanism in Fig. 3). For input $I^{(1)} \in \mathbb{R}^{3\times H\times W}$, SAFM processes features as: 1. 3×3 CondConv extracts features, mapping channels

Content courtesy of Springer Nature, terms of use apply. Rights reserved

to $C/4$; 2. 1×1 convolution adjusts channels to $C/2$; 3. 3×3 depthwise convolution refines features; 4. 1×1 convolution maps channels to $(C-3) \times H \times W$, getting I'; 5. I' concatenates with I (channel - wise) to form $I'' \in \mathbb{R}^{C \times H \times W}$; 6. Final 1×1 convolution outputs $I_{\text{out}} \in \mathbb{R}^{C \times H \times W}$.

Dynamic kernel selection enhances focus on blurred features, improving adaptive processing for diverse blur types/degrees.

FAM

FAM[16] facilitates cross-scale fusion by applying dot-product attention between downsampled features from the previous level and current SAFM outputs, as illustrated in Fig. 2(e). A 3×3 convolution processes the attention map, followed by residual addition to yield the final output:

$$F_{out}^{(i)} = \text{conv}_{3\times3}(X_C^i \odot X_F^i) + X_C^i \tag{1}$$

Encoding and decoding blocks

Each Encoding Block and Decoding Block is composed of two AFCM modules and six Residual Modules, as shown in Fig. 2(b) and Fig. 2(c), respectively. AFCM introduces global context while preserving local details, and residual modules enhance detail retention. Decoding uses transpose convolutions and feature fusion to progressively restore the image.

Residual module

The Residual Module stacks two 3×3 convolutions with ReLU in between and a skip connection. This enables deep feature learning while mitigating gradient issues and promoting information flow.

AFCM

AFCM incorporates the Simple Spatial Attention (SSA, Fig. 4) mechanism. It applies 1D average pooling along height and width to generate attention weights, which are used to emphasize important spatial regions:

$$\text{Attention Weight} = \sigma(\text{Pool}(X)) \tag{2}$$

$$X' = X \odot \text{Attention Weight} \tag{3}$$

Residual connections combine X' with X:

$$X_{out} = X' + X \tag{4}$$

This lightweight module enhances global awareness with low computational cost $O(CHW)$.

MAF

As shown in Fig. 5, the traditional Asymmetric Feature Fusion (AFF) module concatenates multi - level feature maps after dimension normalization and fuses them with fixed 1×1/3×3 convolutions. However, this fixed operation lacks cross - scale feature importance discrimination and global context utilization, resulting in insufficient adaptive fusion.

To address these limitations, the Multi - scale Attention Fusion (MAF) is designed (Fig. 2(d)). For the i - th level encoding output EB_i^{out}, shape transformation yields feature maps M_1, M_2, M_3. These maps are element

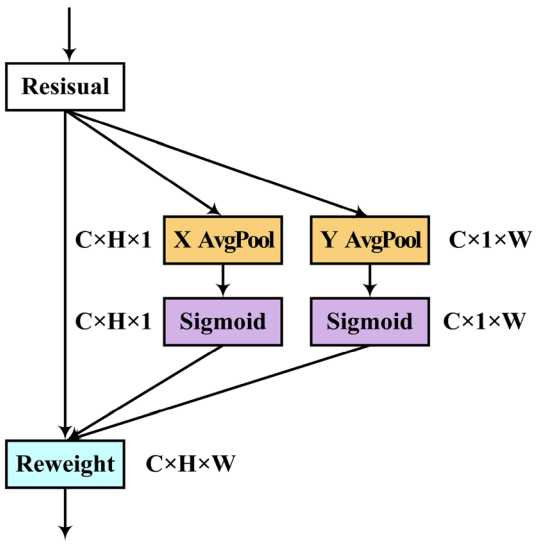

Fig. 4. Simple Spatial Attention.

Content courtesy of Springer Nature, terms of use apply. Rights reserved

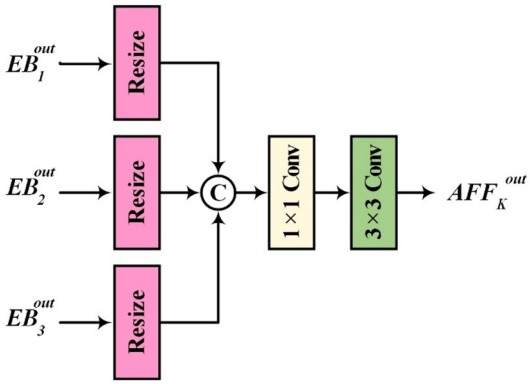

Fig. 5. The structure of AFF.

- wise summed to form P_1 (containing multi - level blurred features). A 1×1 convolution reduces P_1's channels, and spatial average pooling + Sigmoid generates a global attention vector V.

Subsequently, V is split into hierarchical attention vectors v_i along channels. After element - wise multiplication with M_i and summation, P_2 is obtained. Finally, a 3×3 depth convolution refines P_2, outputting the k - th level MAF feature map:

$$MAF_k^{\text{out}} = \text{dconv}_{3\times3}\left(\sum_{i=1}^{3} M_i \odot v_i\right) \tag{5}$$

Here, $dconv3 \times 3$ denotes a 3×3 depth convolution. Despite adding attention operations, MAF maintains lower complexity than AFF by replacing standard 3×3 convolution with depthwise convolution, while matching AFF in parameter count.

Loss function

The overall loss function consists of L1 loss for pixel-level accuracy and Multi-Scale Frequency Reconstruction (MSFR) loss for frequency-domain alignment:

$$L = L_{L1} + \lambda L_{MSFR} \tag{6}$$

$$L_{L1} = \sum_{i=1}^{N} \frac{1}{|l_i|} \|\hat{l}_i - l_i\|_1 \tag{7}$$

$$L_{MSFR} = \sum_{i=1}^{N} \frac{1}{|l_i|} \|F(\hat{l}_i) - F(l_i)\|_1 \tag{8}$$

where F denotes the Fourier transform, and λ is a balancing factor.

Experiments and analysis

Experimental environment

For experiment training and testing, the hardware environment is configured as follows: the CPU adopts 2 Intel(R) Xeon(R) E5-2680 v4 processors with a main frequency of 2.40 GHz; the GPU uses NVIDIA A100. The memory is DDR4 3200MHz 62G. In terms of the software environment, the operating system is Ubuntu 18.04.2, the compiler is Python 3.7.12, the platform is based on CUDA 11.0.3, and the PyTorch 1.7.0 framework is employed to complete the model training and testing.

Datasets

Two mainstream blurred image datasets were employed:

GoPro Dataset[18]: Contains 3,214 blurred-sharp image pairs (2,103 training, 1,111 testing) with a resolution of 1280×720. Blurred images are synthesized by accumulating high-speed video frames to simulate motion blur.

HIDE Dataset[32]: Comprises 8,422 image pairs (6,397 training, 2,025 testing), focusing on non-uniform blur in complex outdoor scenes with diverse human targets.

Training configuration

The model was optimized using the Adam optimizer ($\beta_1 = 0.9$, $\beta_2 = 0.9$, weight decay = 0) with a batch size of 4 and an input size of 256×256. Trained for 3,000 epochs on GoPro dataset, the initial learning rate was set to 10^{-4} and decayed by 50% every 500 epochs. The base channel number C was 32, and the loss function combined L_1 loss and multi-scale frequency reconstruction (MSFR) loss with a weight parameter $\lambda = 0.1$.

Content courtesy of Springer Nature, terms of use apply. Rights reserved

Method	PSNR (dB) ↑	SSIM ↑	MACs (G) ↓
DeepDeblur[18]	29.08	0.914	336.03
SRN[33]	30.26	0.934	94.07
MIMOUNet[16]	31.73	0.951	67.17
MIMOUNet+[16]	32.45	0.957	150.41
MPRNet[34]	32.66	0.959	760.11
Restormer[35]	32.92	0.961	140.00
Baseline[36]	33.40	0.965	84.00
FFTforme[37]	34.21	0.969	1894.00
GyroDeblurNet[38]	-	-	262.00
Proposed Method	31.94	0.953	67.11

Table 1. Evaluation Results on GoPro Dataset.

Method	PSNR (dB) ↑	SSIM ↑
DeepDeblur[18]	25.73	0.874
SRN[33]	28.36	0.915
DMPHN[39]	29.09	0.924
MIMOUNet[16]	29.28	0.921
MIMOUNet+[16]	29.99	0.930
Proposed Method	29.52	0.927

Table 2. Evaluation Results on HIDE Dataset.

Evaluation metrics

Three metrics are used to evaluate the framework:

PSNR–Peak Signal-to-Noise Ratio (dB): Measures pixel-level reconstruction accuracy, where higher values indicate closer alignment to ground-truth sharp images.

SSIM–Structural Similarity Index (0–1 range): Evaluates perceptual quality by quantifying structural, textural, and luminance similarity, with values approaching 1 indicating superior visual fidelity.

MACs–Multiply-Accumulate Operations: Quantifies computational complexity during inference, where lower values signify higher efficiency for resource-constrained deployments.

Results

Quantitative evaluation: Tables 1 and 2 present the evaluation results on GoPro and HIDE datasets, respectively.

On GoPro dataset, the proposed method achieves a PSNR of 31.94 dB and SSIM of 0.953, which are competitive compared to other state-of-the-art methods such as MIMOUNet[16] (31.73 dB/0.951) and MIMOUNet+[16] (32.45 dB/0.957). Importantly, the proposed method achieves a MACs of 67.11 G, significantly lower than larger models like MPRNet[34] (760.11 G) and FFTforme[37] (1894.00 G), highlighting its computational efficiency.

On HIDE dataset, the proposed method achieves PSNR of 29.52 dB and SSIM of 0.927, outperforming DMPHN[39] (29.09 dB/0.924) and MIMOUNet[16] (29.28 dB/0.921). The MACs for the proposed method are still 67.11 G, reinforcing its efficiency in both high-resolution and challenging image restoration tasks.

These results demonstrate that while the proposed method slightly lags behind the best-performing models in terms of PSNR and SSIM, it excels in computational efficiency with significantly lower MACs, making it a lightweight and adaptive solution for image deblurring.

Qualitative analysis: Deblurring results on GoPro dataset are visualized in Fig. 6. The method accurately restored license plate numbers without noticeable skewed artifacts. While the border color refinement was slightly inferior to MIMOUNet+[16], it preserved better structural details overall.

Ablation studies

SAFM: Replacing SAFM with the shallow convolutional module (SCM) reduced PSNR to 31.85 dB (Table 3), verifying the benefit of dynamic convolution for input adaptability. CondConv and DyConv yielded similar gains (+0.09 dB), whereas ODConv underperformed (31.62 dB) due to excessive spatial interaction (Table 4).

AFCM: AFCM with simple spatial attention (SSA) improved PSNR by 0.13 dB over plain Residual Module (31.81 dB), outperforming SE[40] (+0.03 dB) and CA[41] (+0.10 dB, Table 5), highlighting the advantage of preserving spatial location in global context modeling.

MAF: Replacing MAF with the asymmetric feature fusion module (AFF) decreased PSNR to 31.90 dB (Table 6), confirming the positive impact of global attention in multi-scale feature fusion.

Content courtesy of Springer Nature, terms of use apply. Rights reserved

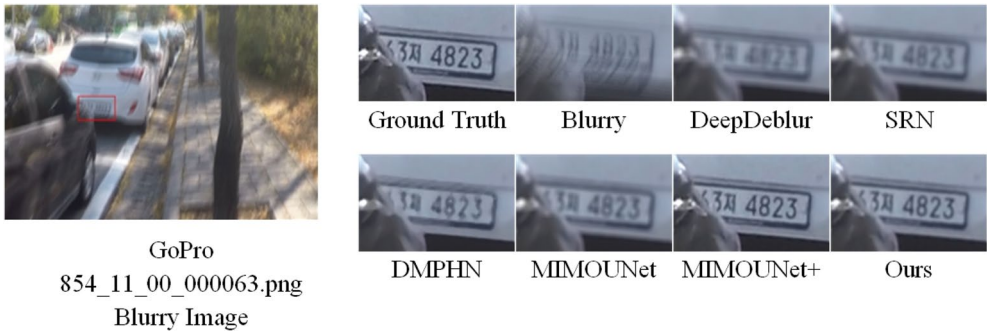

Fig. 6. Comparison of blurry image and deblurring results on GoPro dataset. The left shows the blurry image (ID: 854_11_00_000063.png) with a red box around the license plate area. The right shows a zoomed-in view of this area, with the ground truth, blurry image, and results from various methods: DeepDeblur[18], SRN[39], DMPHN[37], MIMOUNet[16], MIMOUNet+[16], and the proposed method (Ours).

Module	PSNR (dB) ↑
SCM	31.85
SAFM	31.94

Table 3. SAFM ablation study.

Module	PSNR (dB) ↑
SCM	31.85
SCM + CondConv	31.94
SCM + DyConv	31.94
SCM + ODConv	31.62

Table 4. Impact of dynamic convolution layers.

Module	PSNR (dB) ↑
Residual Module	31.81
Residual Module + SE	31.84
Residual Module + CA	31.91
AFCM	31.94

Table 5. SSA and AFCM ablation study.

Module	PSNR (dB) ↑
AFF	31.90
MAF	31.94

Table 6. MAF ablation study.

Conclusion

This study proposes a hierarchical framework to tackle two key challenges in lightweight image deblurring: limited input adaptability and insufficient global context modeling. By integrating dynamic convolution and efficient attention mechanisms, it introduces SAFM for dynamic feature adaptation, AFCM for spatial - aware attention, and MAF for cross - scale feature aggregation.

Though our method slightly trails top - performing models in PSNR and SSIM, it boasts much lower MACs, offering a lightweight, adaptive deblurring solution for resource - constrained scenarios. However, it may struggle with complex tasks like high - resolution, intricate scene deblurring, where it might not match state - of - the - art models.

Content courtesy of Springer Nature, terms of use apply. Rights reserved

Data availability

The datasets used in this study are publicly available: GoPro dataset (https://seungjunnah.github.io/Datasets/gopro) and HIDE dataset (https://github.com/huyvnphan/PyTorch_CIFAR10). Additional data are available from the corresponding author upon reasonable request.

Received: 27 June 2025; Accepted: 4 September 2025
Published online: 26 September 2025

References

1. Zhang, K., Zuo, W. & Zhang, L. Deep learning-based image restoration: A comprehensive review. *IEEE Transactions on Image Processing* **29**, 7805–7824 (2020).
2. Chen, L. et al. Real-time image enhancement for autonomous driving in low-light conditions. *IEEE Trans. Intell. Transp. Syst.* **23**, 11234–11247 (2022).
3. Zhang, K. et al. Deblurgan: Blind motion deblurring using conditional adversarial networks. In Proc. IEEE Conf. Comput. Vis. Pattern Recognit. 8183–8192 (2018).
4. Li, Y. et al. Video enhancement in surveillance systems via adaptive deblurring. *IEEE Transactions on Circuits and Systems for Video Technology* **31**, 3120–3133 (2021).
5. Tian, C. et al. A survey on deep learning for image restoration. *IEEE Transactions on Pattern Analysis and Machine Intelligence (TPAMI)* **44**, 1836–1862 (2020).
6. Howard, A. et al. Mobilenets: Efficient convolutional neural networks for mobile vision applications. In Proceedings of the IEEE/CVF Conference on Computer Vision and Pattern Recognition (CVPR) (2017).
7. Sandler, M. et al. Mobilenetv2: Inverted residuals and linear bottlenecks. In Proceedings of the IEEE/CVF Conference on Computer Vision and Pattern Recognition (CVPR) (2018).
8. Dosovitskiy, A. et al. An image is worth 16x16 words: Transformers for image recognition at scale. In International Conference on Learning Representations (ICLR) (2021).
9. Zhang, H. et al. Dynamic scene deblurring using spatially variant recurrent neural networks. *IEEE Trans. Image Process.* **29**, 5263–5275 (2020).
10. Wiener, N. *Extrapolation, interpolation, and smoothing of stationary time series* (MIT Press, 1949).
11. Krishnan, D. et al. Blind deconvolution using a normalized sparsity measure. In Proc. IEEE Conf. Comput. Vis. Pattern Recognit., 233–240 (2011).
12. Pan, J. et al. Learning dual convolutional neural networks for low-level vision. *IEEE Trans. Pattern Anal. Mach. Intell.* **42**, 3070–3083 (2020).
13. Woo, S. et al. Cbam: Convolutional block attention module. In Proc. Eur. Conf. Comput. Vis., 3–19 (2018).
14. Yu, F. & Koltun, V. Multi-scale context aggregation by dilated convolutions. In International Conference on Learning Representations (ICLR) (2016).
15. Wang, Q., Zhang, R. & Chen, Y. Dynamicconvnet v2: enhanced kernel adaptivity for real-time image restoration. *IEEE Trans. Image Process. (TIP)* **33**, 789–801 (2024).
16. Cho, S. J. et al. Rethinking coarse-to-fine approach in single image deblurring. In Proceedings of the IEEE/CVF International Conference on Computer Vision, 4641–4650 (2021).
17. Zamir, S. W. et al. Restormer: Efficient transformer for high-resolution image restoration. In Proceedings of the IEEE/CVF Conference on Computer Vision and Pattern Recognition, 5728–5739 (2022).
18. Nah, S. et al. Deep multi-scale convolutional neural network for dynamic scene deblurring. In Proceedings of the IEEE Conference on Computer Vision and Pattern Recognition, 3883–3891 (2017).
19. Zhang, Y. et al. Mobiledeblur: Real-time motion deblurring on mobile devices. *IEEE Trans. Mobile Comput.* **21**, 4567–4581 (2022).
20. Liu, Z. et al. Fastdeblur: Knowledge distillation for efficient image restoration. In Proc. AAAI Conf. Artif. Intell., 2345–2353 (2021).
21. Sandler, M. et al. Mobilenetv2: Inverted residuals and linear bottlenecks. In Proc. IEEE Conf. Comput. Vis. Pattern Recognit., 4510–4520 (2018).
22. Chen, Y. et al. Dynamic kernel adaptation for lightweight deblurring. In Proc. IEEE Int. Conf. Image Process., 3215–3219 (2021).
23. Chen, Z. et al. Condconv: Conditionally parameterized convolutions for efficient inference. *Adv. Neural Inf. Process. Syst.* **32**, 1305–1316 (2019).
24. Guo, M. et al. Dyconv: Dynamic convolution for efficient inference. In Proc. Eur. Conf. Comput. Vis., 365–381 (2020).
25. Hu, J. et al. Squeeze-and-excitation networks. In Proc. IEEE Conf. Comput. Vis. Pattern Recognit., 7132–7141 (2018).
26. Zhang, Y. et al. Dynamic kernel adaptation for lightweight deblurring. In Proc. IEEE Int. Conf. Image Process., 3215–3219 (2021).
27. Wang, F. et al. Residual attention network for image classification. In Proc. IEEE Conf. Comput. Vis. Pattern Recognit., 3156–3164 (2017).
28. Liang, J. et al. Swinir: Image restoration using swin transformer. In Proc. IEEE Int. Conf. Comput. Vis., 1833–1844 (2021).
29. Liu, Z. et al. Swin transformer: Hierarchical vision transformer using shifted windows. In Proc. IEEE Int. Conf. Comput. Vis., 10012–10022 (2021).
30. Qin, X. et al. Lightweight multi-scale attention networks for real-time image deblurring. *IEEE Trans. Multimedia* **25**, 2104–2116 (2023).
31. Li, C. et al. Omni-dimensional dynamic convolution. arXiv preprint arXiv:2209.07947 (2022).
32. Hou, Q. et al. Coordinate attention for efficient mobile network design. In Proceedings of the IEEE/CVF Conference on Computer Vision and Pattern Recognition, 13713–13722 (2021).
33. Tao, X. et al. Scale-recurrent network for deep image deblurring. In Proceedings of the IEEE Conference on Computer Vision and Pattern Recognition, 8174–8182 (2018).
34. Zamir, S. W. et al. Multi-stage progressive image restoration. In Proceedings of the IEEE/CVF Conference on Computer Vision and Pattern Recognition, 14821–14831 (2021).
35. Zamir, S. et al. Restormer: Efficient transformer for high-resolution image restoration. In Proceedings of the IEEE/CVF Conference on Computer Vision and Pattern Recognition, 5728–5739 (2022).
36. Chen, L., Chu, X., Zhang, X. & Sun, J. Simple baselines for image restoration. In Proceedings of the European Conference on Computer Vision, 17–33 (2022).
37. Kong, L., Dong, J., Ge, J. et al. Efficient frequency domain-based transformers for high-quality image deblurring. In Proceedings of the IEEE/CVF Conference on Computer Vision and Pattern Recognition, 5886–5895 (2023).
38. Yang, H. et al. Gyro-based neural single image deblurring. In Proceedings of the Computer Vision and Pattern Recognition Conference, 23111–23120 (2025).
39. Zhang, H. et al. Deep stacked hierarchical multi-patch network for image deblurring. In Proceedings of the IEEE/CVF Conference on Computer Vision and Pattern Recognition, 5978–5986 (2019).
40. Chen, L. et al. Hinet: Half instance normalization network for image restoration. In Proceedings of the IEEE/CVF Conference on Computer Vision and Pattern Recognition, 14821–14831 (2021).

Content courtesy of Springer Nature, terms of use apply. Rights reserved

41. Liu, Z. et al. Swin transformer: Hierarchical vision transformer using shifted windows. In Proceedings of the IEEE/CVF International Conference on Computer Vision, 10012–10022 (2021).

Author contributions

X.Z. proposed the method and conducted the experiments. Y.Z., H.Z., and P.H. assisted with implementation and data analysis. Y.L. provided overall guidance and supervision. All authors reviewed and approved the final manuscript.

Funding

This research was supported by the Open Fund of the Center for Applied Mathematics of Guangxi, Guilin University of Electronic Technology (Grant No. AD23023002) and the National Natural Science Foundation of China (Grant No. 61876010).

Declarations

Competing interests

The authors declare no competing interests.

Additional information

Correspondence and requests for materials should be addressed to X.Z.

Reprints and permissions information is available at www.nature.com/reprints.

Publisher's note Springer Nature remains neutral with regard to jurisdictional claims in published maps and institutional affiliations.

Open Access This article is licensed under a Creative Commons Attribution-NonCommercial-NoDerivatives 4.0 International License, which permits any non-commercial use, sharing, distribution and reproduction in any medium or format, as long as you give appropriate credit to the original author(s) and the source, provide a link to the Creative Commons licence, and indicate if you modified the licensed material. You do not have permission under this licence to share adapted material derived from this article or parts of it. The images or other third party material in this article are included in the article's Creative Commons licence, unless indicated otherwise in a credit line to the material. If material is not included in the article's Creative Commons licence and your intended use is not permitted by statutory regulation or exceeds the permitted use, you will need to obtain permission directly from the copyright holder. To view a copy of this licence, visit http://creativecommons.org/licenses/by-nc-nd/4.0/.

© The Author(s) 2025

Content courtesy of Springer Nature, terms of use apply. Rights reserved

Terms and Conditions

Springer Nature journal content, brought to you courtesy of Springer Nature Customer Service Center GmbH ("Springer Nature").
Springer Nature supports a reasonable amount of sharing of research papers by authors, subscribers and authorised users ("Users"), for small-scale personal, non-commercial use provided that all copyright, trade and service marks and other proprietary notices are maintained. By accessing, sharing, receiving or otherwise using the Springer Nature journal content you agree to these terms of use ("Terms"). For these purposes, Springer Nature considers academic use (by researchers and students) to be non-commercial.
These Terms are supplementary and will apply in addition to any applicable website terms and conditions, a relevant site licence or a personal subscription. These Terms will prevail over any conflict or ambiguity with regards to the relevant terms, a site licence or a personal subscription (to the extent of the conflict or ambiguity only). For Creative Commons-licensed articles, the terms of the Creative Commons license used will apply.
We collect and use personal data to provide access to the Springer Nature journal content. We may also use these personal data internally within ResearchGate and Springer Nature and as agreed share it, in an anonymised way, for purposes of tracking, analysis and reporting. We will not otherwise disclose your personal data outside the ResearchGate or the Springer Nature group of companies unless we have your permission as detailed in the Privacy Policy.
While Users may use the Springer Nature journal content for small scale, personal non-commercial use, it is important to note that Users may not:

1. use such content for the purpose of providing other users with access on a regular or large scale basis or as a means to circumvent access control;
2. use such content where to do so would be considered a criminal or statutory offence in any jurisdiction, or gives rise to civil liability, or is otherwise unlawful;
3. falsely or misleadingly imply or suggest endorsement, approval , sponsorship, or association unless explicitly agreed to by Springer Nature in writing;
4. use bots or other automated methods to access the content or redirect messages
5. override any security feature or exclusionary protocol; or
6. share the content in order to create substitute for Springer Nature products or services or a systematic database of Springer Nature journal content.

In line with the restriction against commercial use, Springer Nature does not permit the creation of a product or service that creates revenue, royalties, rent or income from our content or its inclusion as part of a paid for service or for other commercial gain. Springer Nature journal content cannot be used for inter-library loans and librarians may not upload Springer Nature journal content on a large scale into their, or any other, institutional repository.
These terms of use are reviewed regularly and may be amended at any time. Springer Nature is not obligated to publish any information or content on this website and may remove it or features or functionality at our sole discretion, at any time with or without notice. Springer Nature may revoke this licence to you at any time and remove access to any copies of the Springer Nature journal content which have been saved.
To the fullest extent permitted by law, Springer Nature makes no warranties, representations or guarantees to Users, either express or implied with respect to the Springer nature journal content and all parties disclaim and waive any implied warranties or warranties imposed by law, including merchantability or fitness for any particular purpose.
Please note that these rights do not automatically extend to content, data or other material published by Springer Nature that may be licensed from third parties.
If you would like to use or distribute our Springer Nature journal content to a wider audience or on a regular basis or in any other manner not expressly permitted by these Terms, please contact Springer Nature at

onlineservice@springernature.com