EEE207 ANALOG CIRCUITS PHASE III PROJECT REPORT

Project done by:

S.No.,	Name of the student	Registration Number
01.	K. Dhana Sri Keerthi	AP24110040009
02.	Saketh	AP24110040011
03.	Kiran	AP24110040013
04.	Kireeti	AP24110040008
05.	Divya	AP24110040010

Submitted to:

Faculty: Dr Arghya Chakravarthy

Course Name: Analog Circuits

Course Code: EEE207

EEE207 ANALOG CIRCUITS PHASE III PROJECT REPORT

Table of contents

S.NO	NAME OF THE CONTENT	PAGE NUMBER
01.	AIM	03
02.	APPARATUS	03
03.	BLOCK DIAGRAM	03
04.	WORKING PRINCIPLE	04
05.	OUTPUT RESULT PICTURES	04
06.	APPLICATIONS	05
07.	RESULTS	05

EEE207 ANALOG CIRCUITS PHASE III PROJECT REPORT

AIM:

To generate and study **Pulse Width Modulation** (PWM) signals using a comparator and observe the variation in pulse width with respect to input voltage.

APPARATUS:

- Operational Amplifier (e.g., IC 741 / TL084)
- Comparator (e.g., LM311)
- Resistors
- Capacitors
- Function Generator (for triangular wave)
- DC Power Supply (dual supply if needed)
- Breadboard
- Connecting Wires
- Digital Oscilloscope

BLOCK DIAGRAM:

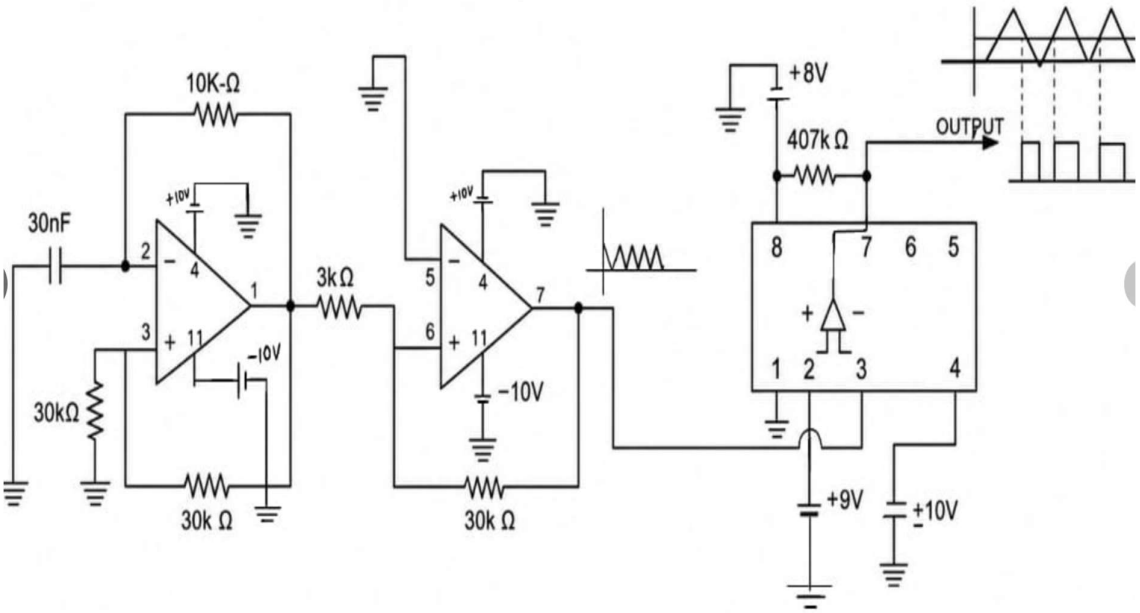

EEE207 ANALOG CIRCUITS PHASE III PROJECT REPORT

WORKING PRINCIPLE:

Pulse Width Modulation (PWM) is a technique used to control the average power delivered to a load by varying the pulse width while keeping the frequency constant.

In this experiment:

- A **triangular wave** is generated using an opamp (like TL084).
- This triangular wave is given to one input of the comparator (LM311).
- A **reference DC voltage** is applied to the other input.

The comparator compares both signals:

- When triangular wave > reference voltage then output is HIGH
- When triangular wave < reference voltage then output is LOW

This results in a square wave whose **pulse width varies with** the reference voltage.

Higher reference voltage then narrower pulse
Lower reference voltage then wider pulse

So basically, you're controlling ON time vs OFF time, that's PWM.

OUTPUT RESULTS:

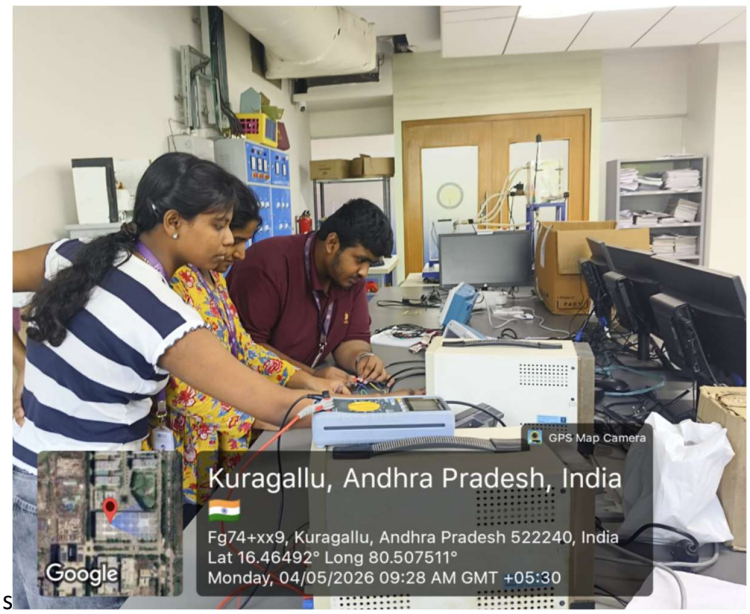

s

EEE207 ANALOG CIRCUITS PHASE III PROJECT REPORT

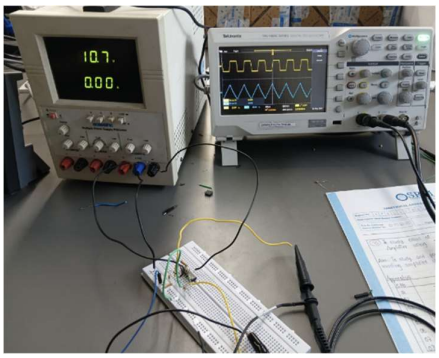

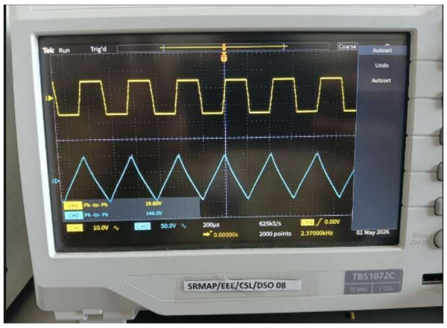

APPLICATIONS:

Motor Speed Control

LED Dimming

Power Control in SMPS

RESULTS:

Pulse Width Modulation was successfully generated using a comparator circuit. It was observed that the pulse width of the output signal varies with changes in the reference voltage while the frequency remains constant. PWM is widely used in applications like motor speed control, LED dimming, and power regulation.