EEE207 ANALOG CIRCUITS PHASE II PROJECT REPORT

Project done by:

S.No.,	Name of the student	Registration Number
01.	K. Dhana Sri Keerthi	AP24110040009
02.	Saketh	AP24110040011
03.	Kiran	AP24110040013
04.	Kireeti	AP24110040008
05.	Divya	AP24110040010

Submitted to:

Faculty: Dr Arghya Chakravarthy

Course Name: Analog Circuits

Course Code: EEE207

EEE207 ANALOG CIRCUITS PHASE II PROJECT REPORT

Table of contents

S.NO	NAME OF THE CONTENT	PAGE NUMBER
01.	AIM	03
02.	SPECIFICATIONS, BLOCK DIAGRAM	03
03.	APPARATUS	04
04.	WORKING PRINCIPLE	04
05.	DESIGN CALCULATIONS	05
06.	OUTPUT RESULT PICTURES	06
07.	CONCUSION AND RESULT	06

EEE207 ANALOG CIRCUITS PHASE II PROJECT REPORT

AIM:

To design and implement a power conditioning circuit using a step-down DC–DC converter to obtain a regulated low-voltage DC output from a higher DC input with high efficiency.

SPECIFICATIONS:

Input Voltage (Vin): 12 V DC

Output Voltage (Vout): 5 V DC

Output Current (Io): 1 A

Switching Frequency (fs): 50 kHz

Converter Type: Buck (Step-Down) Converter

BLOCK DIAGRAM:

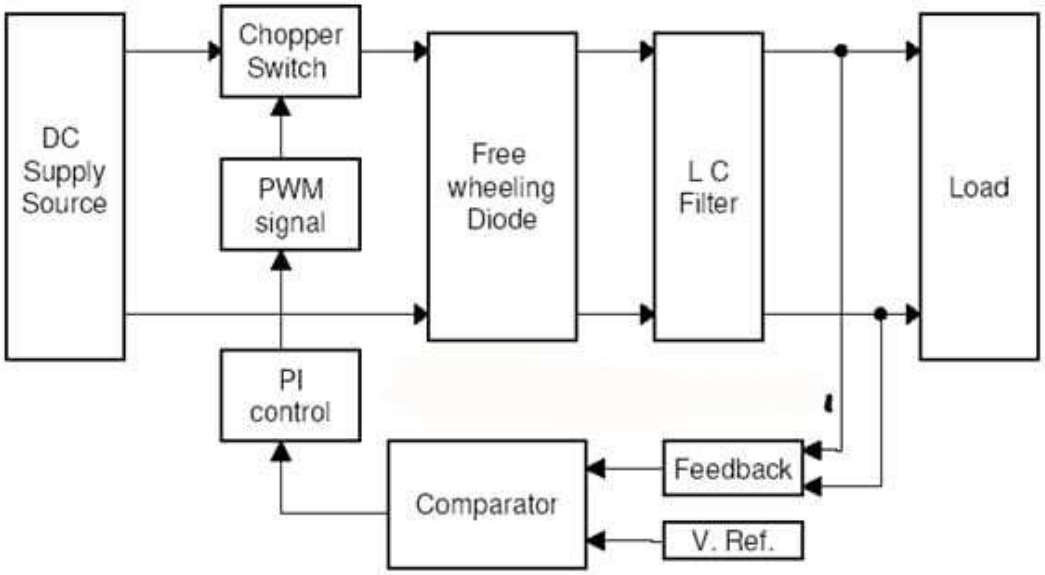

APPARATUS:

- MOSFET (IRF540 / equivalent)
- Fast recovery diode (Schottky diode – 1N5819)
- Inductor (L)
- Output capacitor (C)
- PWM controller (IC 555 / TL494 / microcontroller)
- Input capacitor (100 µF)
- Load resistor
- Connecting wires / PCB

WORKING PRINCIPLE:

The designed inductor operates based on **Faraday's Law of Electromagnetic Induction** and energy storage in a magnetic field.

When a voltage is applied across the inductor, current starts flowing through the winding. This current produces a magnetic field inside the core. As the current increases, energy is stored in the magnetic field of the inductor.

The relationship between voltage and current in an inductor is given by:

$$V = L\frac{dI}{dt}$$

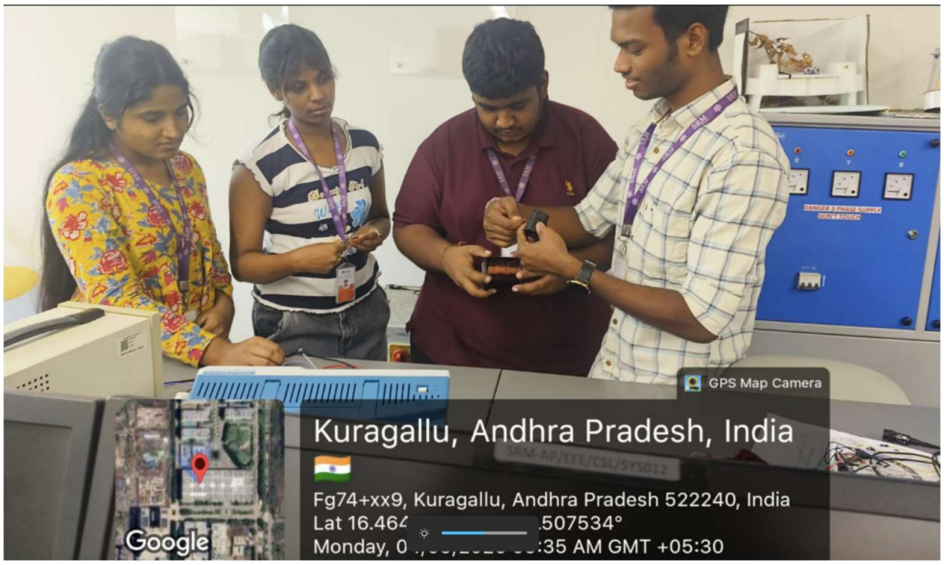
GPS Map Camera
Kuragallu, Andhra Pradesh, India
Fg74+xx9, Kuragallu, Andhra Pradesh 522240, India
Google

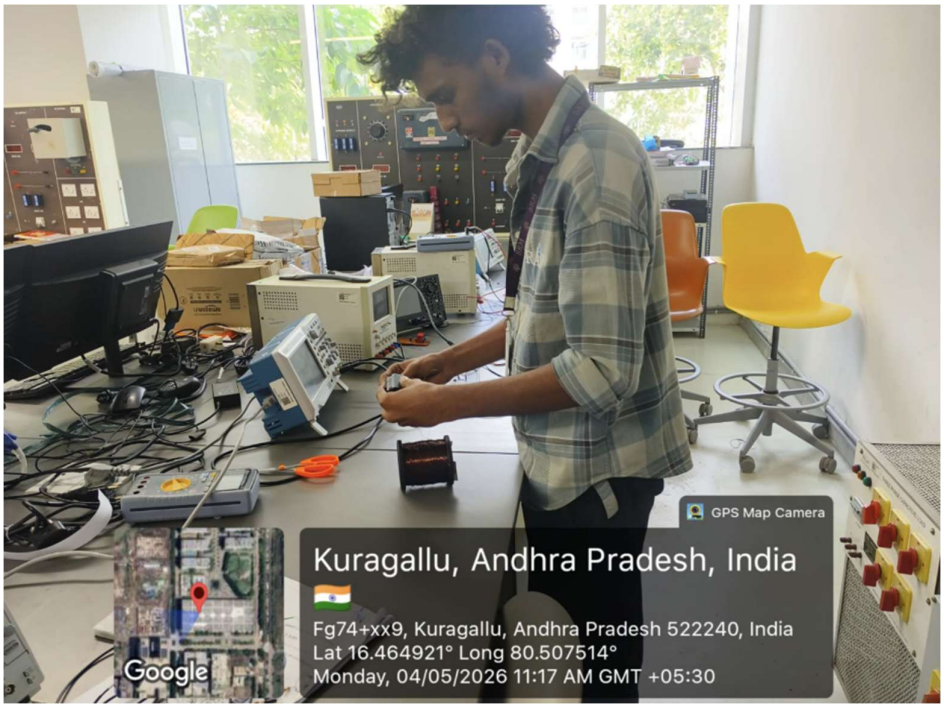
GPS Map Camera
Kuragallu, Andhra Pradesh, India
Fg74+xx9, Kuragallu, Andhra Pradesh 522240, India
Lat 16.464921° Long 80.507514°
Monday, 04/05/2026 11:17 AM GMT +05:30
Google

DESIGN CALCULATIONS:

Given Parameters

$V_{in} = 15V$
$V_o = 5V$
$I_o = 1A$
$f_s = 50e3Hz$

Step I: Inductance Calculation

Ripple current: $\Delta I_L = 0.2 \times I_o = 0.2 \times 1 = 0.2A$

Inductance: $L = V_o(V_{in} - V_o)$ $\frac{}{\Delta I_L\, f_s\, V_{in} = \frac{5(15-5)}{0.2 \times 50 \times 10^3 \times 15} = 3.33 \times 10^{-4}\, H = 0.33mH}$

Step II: Energy Stored

$I_{max} = I_o + \frac{\Delta I_L}{2} = 1 + \frac{0.2}{2} = 1.1A$

$E = 1$ $\frac{}{2LI_{max}^2 = \frac{1}{2}(0.33 \times 10^{-3})(1.1)^2 = 1.996 \times 10^{-4}\, J}$

Step III: Area Product

$A_p = \frac{2E}{K_c K_w J B_m}$

Given: $K_c = 1, \quad K_w = 0.6$

$J = 3\, A/mm^2 = 3 \times 10^6\, A/m^2$

$B_m = 0.2\, T$

$A_p = \frac{2 \times 1.996 \times 10^{-4}}{1 \times 0.6 \times 3 \times 10^6 \times 0.2}$

$= 1.11 \times 10^{-9}\, m^4$

$= 1110\, mm^4$

$= 0.111\, cm^4$

Core Selection

Selected core: PQ20/16 Ferrite Core

$A_p = 0.294\,cm^4$

$A_c = 0.620\,cm^2$

$A_w = 0.474\,cm^2$

Step IV: Number of Turns

$N = L\ I_{max} \frac{}{A_c B_m}$

(Converting A_c to m^2)

$A_c = 0.620 \times 10^{-4}\,m^2$

$N = 0.33 \times 10^{-3} \times 1.1 \frac{}{0.620 \times 10^{-4} \times 0.2 = 29.27 \approx 30\,turns}$

Step V: Conductor Area

$a = I \frac{}{J = \frac{1}{3 \times 10^6} = 3.33 \times 10^{-7}\,m^2}$

Window Area Check

$A_w K_w > a \cdot N$

(Converting A_w to m^2)

$A_w = 0.474 \times 10^{-4}\,m^2$

$LHS = 0.474 \times 10^{-4} \times 0.6 = 2.844 \times 10^{-5}$

$RHS = 3.33 \times 10^{-7} \times 29.27 = 9.75 \times 10^{-6}$

$2.844 \times 10^{-5} > 9.75 \times 10^{-6}$

Condition satisfied.

RESULTS AND CONCLUSION:

- Calculated inductance: **0.33 mH**
- Maximum current: **1.1 A**
- Energy stored: **1.996×10−41.996 \times 10^{-4}1.996×10−4 J**
- Area product: **0.111 cm4^44**
- Selected core: **PQ20/16 ferrite core**
- Number of turns: **30 turns**
- Conductor area: **3.33×10−73.33**

The inductor was successfully designed to meet the required specifications. The calculated inductance ensures controlled current ripple, while the selected core prevents magnetic

saturation under operating conditions. The number of turns and conductor size are adequate for the given current rating.

The window area check confirms that the winding fits within the core, ensuring practical feasibility. Overall, the design is efficient, stable, and suitable for applications such as DC-DC converters.