PERTRONIC
SPIB LIOS LHD INTERFACE
TECHNICAL MANUAL

Valid For:

SPIB LIOS LHD Firmware	V1.00
SPIB Hardware	V1.40
Panel F220	V4.00 and later
Panel F120A, status only	V1.04.02, V1.32.05
Panel F120A, status plus isolate functionality	V4.24
Panel F120A, full functionality	V5.00

ISSUE 2.00

Serial Number:

Date of Manufacture: … / … / …

The content of this manual is copyright.

This document is to be used only for operating or maintaining Pertronic Fire Alarm systems.

This document is not to be reproduced, photocopied or passed in part or whole to a third party without the express, written authorization of

Pertronic Industries

CONTENTS

1.	Description	1
1.1	Operation	1
1.2	Interface Connections	2
2.	LHD Controller Modbus Interfacing	4
3.	Loop Device Emulation	5
4.	Configuration	6
4.1	View Stored Options	6
4.2	Panel Communications Setup	6
4.3	Modbus Communications Setup	7
4.4	Configuration Save/Restore/Default	8
5.	INSTALLATION	9
6.	Ordering Information	9
PERTRONIC SALES AND TECHNICAL SUPPORT		10

FIGURES

Figure 1-1: Detail View of SPIB LEDs 1

Figure 1-2 SPIB Printer Connection Diagram 2

Figure 1-2 SPIB hardware block diagram 3

TABLES

Table 1-1 LED Indicator Functions 1

Table 2-1Modbus Slave ID Addresses 4

1. DESCRIPTION

This interface board is based on the Pertronic Industries Simple Protocol Interface Board (SPIB) for the purpose of translating the status of a LIOS Linear Heat Detector controller (LHD) to emulated loop devices on the Pertronic ***F120A*** or ***F220*** fire alarm panel.

1.1 Operation

The SPIB polls the LHD via Modbus to obtain the state of the zonal Alarm, Prealarm & Fibre Break conditions on the device. The LHD supports up to 1000 heat zones per channel, configuration of which is done independently via a proprietary tool that defines zone size (length of fibre-optic cable to be monitored) and alarm conditions for each zone (absolute temperature and/or rate-of-rise profiles can be used per zone). The LHD system has the ability to detect fibre breaks with enough precision to generate a Fibre Break event corresponding to the length of fibre comprising each alarm zone.

The SPIB collates the LHD's Modbus information into emulated heat detector states across up to 4 loops of 159 detectors each.

1.1.1 LED Indicators

LED Name	Description
Board Fault	Activates whenever a system-level fault is present: • Panel not connected (no loop emulation polls detected). • Modbus slave (LHD controller) not detected. Note that multiple Modbus requests are made to the LHD, depending on the number of emulated loops; all must have successful replies to maintain normal state.
Poll	Blinks (for 20ms) for every successful Modbus data reply from the LHD controller.
Fire	Active if any LHD zone is in Alarm state.
Isolate	Active if any LHD zone is in Break state.
Defect	Active if any LHD zone is in Prealarm state.
Normal	Active if all LHD zones are in the Normal state.

Table 1-1 LED Indicator Functions

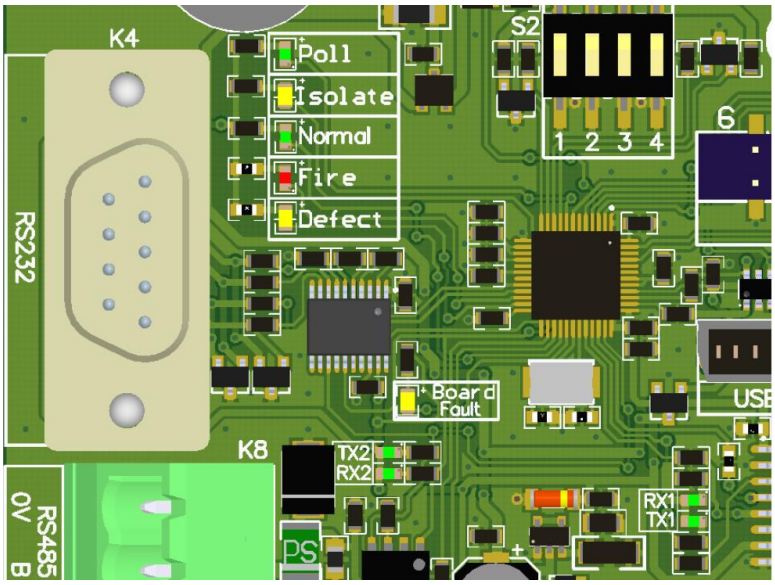

Figure 1-1: Detail View of SPIB LEDs

1.2 Interface Connections

The SPIB provides one galvanically isolated RS485 serial interface, a selectable RS232/RS485 serial interface and a USB slave port in Communication Device Class (CDC) mode to emulate a 3rd serial port for configuration.

The SPIB layout is shown below:

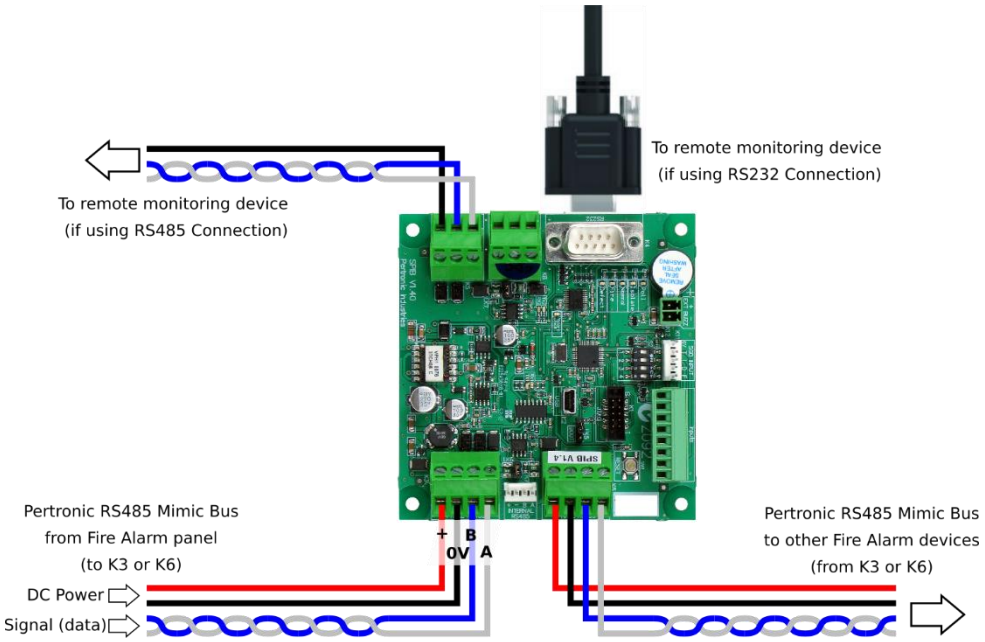

Figure 1-2 SPIB Printer Connection Diagram

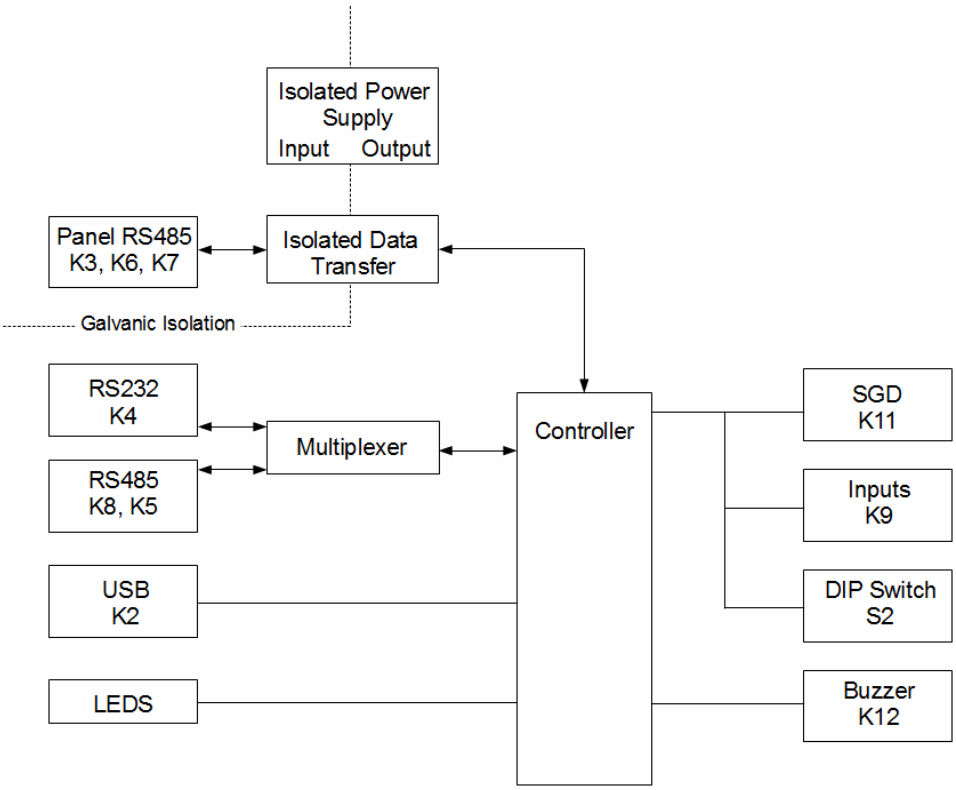

Figure 1-3 SPIB hardware block diagram

The SPIB's onboard DC-DC converter is used to derive the supply voltage for the SPIB logic from the power terminals of the panel RS485 port. The panel's RS485 data connection is optically isolated from the main SPIB logic also. Hence the SPIB cannot generate an earth fault condition on the panel, even when a USB connection on an earthed computer is being used to configure the board.

2. LHD CONTROLLER MODBUS INTERFACING

The LIOS LHD controller exposes information using multiple Modbus Slave IDs and registers. The base ID is programmed into the LIOS and has to match the one programmed in the SPIB. Controller-wide information is accessed via the base ID, and each LHD channel (fibre) is presented at (base ID + channel) as follows:

Slave ID	Type[1]	Address(es)[2]	Description
<base>	DI	409	Global controller Fault indication
<base>	DI	410	Global controller Alarm indication
<base>	CO	1	Controller Reset
<base + 1>	DI	1..1000	Channel 1 Alarm (zones 1-1000)
<base + 1>	DI	1001..2000	Channel 1 Prealarm (zones 1-1000)
<base + 1>	DI	2001..3000	Channel 1 Fibre Break (zones 1-1000)
…	…	…	…
<base + 4>	DI	1..1000	Channel 4 Alarm (zones 1-1000)
<base + 4>	DI	1001..2000	Channel 4 Prealarm (zones 1-1000)
<base + 4>	DI	2001..3000	Channel 4 Fibre Break (zones 1-1000)

Table 2-1Modbus Slave ID Addresses

The SPIB code only reads the first 159 zone states for each channel (rather than the maximum 1000) and translates these to emulated device states for detectors 1-159 on up to 4 loops.

The global Alarm and Fault states generated by the controller are captured at emulated Module 1 and 2 devices on the first emulated loop; these devices should be programmed at the panel to perform any desired action. Note that they will generate Fault or Alarm events even if the corresponding panel configuration is not present.

The LIOS controller Reset function is used to unlatch any conditions on the controller. The LIOS automatically latches any LHD zone alarms, along with the global Alarm state. The SPIB can detect a specific LED activation on the panel to trigger a Modbus write (coil OFF, or zero) to the address specified above in order to clear any latched states.

[1] As per Modbus specification: DI=Discrete Input, CO=Coil, IR=Input Register, HR=Holding Register

[2] Using 1 as the lowest possible Modbus address (some implementations use 0 as a base).

3. LOOP DEVICE EMULATION

The panel & SPIB communicate via a special loop emulation protocol that utilises unused physical loops on the fire panel. The panel periodically compares the loop device configuration with the actual number of Loop Drivers configured at the panel. In normal operation, configuring a device at an “invalid” address beyond the range of configured loop driver boards will make the panel generate **Missing** events for any of these addresses.

However, if the loop emulation option is enabled in the panel configuration, this behaviour is modified. The panel will send a special emulation status request via the RS485 mimic bus for every loop beyond the configured loop driver limit that has a configured device in it. If there is no response to this request, the panel behaves as though emulation is disabled, and generates **Missing** events as usual (after a delay until the panel decides that the emulator is not connected).

For this application, the SPIB generates **Alarm** events for LHD alarms and **Defect** for fibre break; the **Missing** event can only be generated if the panel fails to communicate with the SPIB, as outlined above.

Note that the **Alarm** state generated by the SPIB is still interpreted by the panel according to the device configuration, so will not necessarily result in an alarm condition at the panel, but can still be used for mapping and logic functions, just as any other physical device can.

4. CONFIGURATION

The unit can be completely configured via the built-in terminal interface. The SPIB operates a USB port in Communication Device Class slave mode, emulating a standard serial port. A PC running a simple terminal emulation program can be used to communicate with the SPIB after installing the appropriate driver. The data format is irrelevant in USB mode, since there's no physical serial connection; the port always operates at the maximum rate possible.

Upon reset (or pressing the '?' key in the terminal), the SPIB responds with the following screen of data:

```
====================================================
  P E R T R O N I C   I N D U S T R I E S   L T D
      Simple Protocol Interface Board (SPIB)
             F120/F220 LIOS Interface
         Version 0.91, 16-Apr-2018 [e165d]
====================================================
Interactive Options:

   V) View stored options
   P) Panel communications setup
   M) Modbus communications setup
   S) Save configuration data to Flash
   R) Revert to saved configuration
   D) Restore default configuration
Selection:
```

At this point the SPIB is expecting one of the keys shown (V, P, M, S, R or D) to be pressed. The main menu options are discussed in detail below:

4.1 View Stored Options

Pressing **V** at the prompt sends the current configuration settings to the terminal as follows:

```
-----------------------------------------------
Stored Options
-----------------------------------------------

+++ Modbus Communications +++
Use RS485 output: YES
Use ASCII mode for Modbus: NO
Port speed: 19200
Slave address: 1
Modbus timeout: 10ms
Modbus delay: 0ms
+++ Panel Communications +++
Port speed: 9600
Mimic Emulation: Disabled
Emulated loop start: 0
Emulated loop count: 1
Reset LED number: 0
```

Note that the values shown above are the defaults.

4.2 Panel Communications Setup

This option allows setting up the SPIB parameters affecting panel communications.

4.2.1 Port Speed

This is the speed of the panel RS485 mimic bus; it should be left at the default value of 9600, which is the only available speed available for the bus at the panel.

4.2.2 Mimic Emulation Setup

The SPIB can be programmed to emulate a standard LED or LCD mimic in order to provide backup connection monitoring between the panel and the SPIB. If the emulation mode is not set at the panel, or the configuration does not have the correct loop addresses programmed, then the panel won't necessarily explicitly indicate anything is wrong if the SPIB is not communicating properly.

The SPIB can be set to LED mimic, address 1 to 8, or LCD mimic, address 1 to 32.

4.2.3 Emulated Loop Start

This sets the base address for the 4 emulated loops that the SPIB supports. See the "Loop Device Emulation" section above for operational details. If this value is set to zero (the default), emulation is disabled. Note that this **must** be set to a valid value corresponding to the devices configured at the panel.

4.2.4 Emulated Loop Count

This parameter controls the number of loops the SPIB will provide data for to the panel.

Example: **Emulated Loop Start** is set to 11 and the **Emulated Loop Count** is set to 3. The SPIB will expose the emulated devices appearing at L11D001 to L11D159, L12D001 to L12D159 and L13D001 to L13D159.

4.2.5 Reset LED Number

This parameter allows the panel to reset the LHD controller to clear any latched states. If the SPIB detects that the panel is trying to turn on the designated LED, the SPIB will write to the special Modbus location used to trigger the LHD Reset function (see LHD Controller Modbus Interfacing above).

Typically the panel's **Reset** system event would be mapped to the designated LED, so that resetting a device on the panel would trigger a corresponding LHD reset.

4.2.6 Double-Knock Prealarm Escalation

The SPIB can optionally apply "double-knock" logic to prealarms in adjacent loops. This is used in the event that the LHD controller is monitoring a second fibre alongside the first to provide redundancy. If this logic is enabled, the SPIB will escalate Prealarms in 2 adjacent loops to an Alarm state. This logic applies for prealarms in the 1st and 2nd emulated loops as well as the 3rd and 4th loops, if used.

The option is not available unless there are at least 2 emulated loops configured. If enabled, the logic only applies to pairs of loops, so that if only 3 loops are being emulated, the setting will have no effect on the 3rd loop.

Note that the escalated Alarm event is always generated on the 2nd loop of the pair only.

4.3 Modbus Communications Setup

This option allows setting up the SPIB parameters affecting Modbus communications.

4.3.1 Use RS485 Output

Selects whether the RS232 port or the RS485 port (connectors K5 or K8 on the PCB) is used for Modbus communication. The SPIB hardware comprises a single UART device which is software-selectable to use either an RS232 or RS485 transceiver; it is not possible to use both simultaneously. Selecting RS485 mode allows multidrop operation so that one Modbus master can communicate with multiple slaves over the same data cable.

4.3.2 Modbus Mode

Selects whether the SPIB uses ASCII mode or RTU (binary) mode when transmitting data. RTU mode is more efficient, as ASCII mode uses roughly twice as much data to transmit the same information.

4.3.3 Modbus Port Speed

This is selectable to any value between 300 and 115200bps; the SPIB has a precise fractional baud rate generator, so will support any “standard” rate at a high level of accuracy, and will support non-standard rates if required.

4.3.4 Modbus Slave Address

Selects the address for the LHD’s Modbus interface. This must correspond to the LHD controller’s setting, otherwise communication will not occur properly, if at all.

4.3.5 Modbus Reply Delay

This parameter forces a delay between receiving a poll from the master & replying to it. This is intended for use in RS485 communications where the master may take a finite time after the last byte sent to switch to receive mode. This can occur in multi-tasking operating systems (e.g. Windows®) if the Modbus communication process loses its time-slice as the last byte is transmitted. In such cases the first byte(s) of the SPIB’s reply may be lost as the master RS485 hardware is still in transmit mode.

4.4 Configuration Save/Restore/Default

The “live” SPIB settings are held in RAM, so settings can be tested immediately, as they are adjusted using the menus. On reset or power-up, the RAM copy of the settings is copied from the CPU’s non-volatile Flash memory. These options allow maintenance of the overall configuration.

4.4.1 Save Configuration to Flash

Copies the current RAM settings to Flash memory; they become the settings used after board reset.

4.4.2 Revert to Saved Configuration

Replaces the RAM copy of the configuration with the copy saved in Flash.

4.4.3 Restore Default Configuration

Reverts the RAM configuration to the factory defaults; note that this still must be saved to Flash in order to restore the factory configuration on power-up or reset.

The factory default settings are those shown in the “View Stored Options” section above.

5. INSTALLATION

The SPIB board would normally be mounted in an alarm panel but can also be mounted in a separate case. The SPIB hardware occupies a standard Pertronic footprint that allows mounting on top of or in place of the Auxiliary Relay Board, alternatively the SPIB hardware can be mounted directly on the panel gear plate.

6. ORDERING INFORMATION

Ordering Information:		
Product Code	**Description**	
SPIB-LIOS	SPIB Interface-LIOS Linear Heat Detector (RS485 cable and standoffs included)	

Document Change History

Issue Number	Reason for Update	Description of Changes	Author
0.01		First Draft	JDE
2.00	First release	CN2692	JPF

PERTRONIC SALES AND TECHNICAL SUPPORT

New Zealand
Pertronic Industries Limited

Head Office
17 Eastern Hutt Road
Wingate
Lower Hutt
Phone +64 4 5673229
Fax +64 4 5673644
sales@pertronic.co.nz

Auckland
359 Onehunga Mall
Onehunga
Phone +64 9 633 0226
Fax +64 9 633 0228

www.pertronic.co.nz

Australia
Pertronic Industries Pty Limited

Melbourne
Unit B2
2A Westall Rd
Springvale
VIC 3171
Phone +61 3 9562 7577
Fax +61 3 9562 8044
sales.vic@pertronic.com.au

Sydney
Unit 19
287 Victoria Rd
Rydalmere
NSW 2116
Phone +61 2 9638 7655
Fax +61 2 9638 7688
sales.nsw@pertronic.com.au

Brisbane
Unit 3
43-49 Sandgate Rd
Albion
QLD 4010
Phone +61 7 3255 2222
Fax +61 7 3054 1458
sales.qld@pertronic.com.au

Adelaide
65 Manton Street
Hindmarsh
SA 5007
Phone +61 8 8340 9533
Fax +61 8 8340 9544
sales.sa@pertronic.com.au

Perth
3/71 Beringarra Ave
Malaga
WA 6090
Phone +61 8 6555 3008
Fax +61 8 9248 3783
sales.wa@pertronic.com.au

www.pertronic.com.au