PERTRONIC
50W, 24Vdc
100VRMS Line Amplifier
TECHNICAL MANUAL
AUSTRALIA

Valid For:

PCB Hardware: v3.00 and greater

PCB Firmware: v3.00 and greater

Issue 4.2

The contents of this manual are copyright.

This document is to be used only for operating Pertronic 24V/50W Evacuation Amplifier systems.

This document is not to be reproduced, photocopied or passed in part or whole to a third party without the express, written authorisation of Pertronic Industries Pty Ltd

© Pertronic Industries Pty Ltd.

Acronyms:

AVF	Alarm Verification Facility	A facility designed to minimise ‘false alarms’. Upon activation of a detector, software resets the circuit or detector, waiting for further triggering.
EOL	End Of Line	End-of-line termination used to monitor the presence and integrity of a circuit.
LED	Light Emitting Diode	
MCP	Manual Call-Point	
OC	Open-circuit	
PCB	Printed Circuit Board	
SC	Short-circuit	

Glossary:

F220	Pertronic F220 series Fire Alarm Panel
F120A	Pertronic F120A series Fire Alarm Panel
F100A	Pertronic F100A series Fire Alarm Panel
Tone	A period of sound that can be generated by the amplifier. (May include multiple sounds and sound variations within the period of the tone.)
Message	A period of sound that contains voice. (May also be generically referred to as a tone.)
Available Tone	A tone (or message) that is stored in the amplifier’s memory. (Sometimes called Standard Tones.)
Default Tone	A tone (or message) selection set during manufacture.
Custom Tone	A tone (or message) created for a customer by special order.

CONTENTS

1	INTRODUCTION	1
	1.1 Functional Description	1
2	SPECIFICATIONS	2
	2.1 PCB Layout	2
	2.2 Access Points	3
3	SYSTEM FEATURES	4
4	MIC PRE-AMPLIFIER	8
	4.1 Product Overview:	8
	4.2 Remote Pre-Amp Board	8
5	INSTALLATION	10
	5.1 Power Supply	10
	5.2 BELL Mode	10
	5.3 100V Line Output	11
	5.4 Direct Input Operation	12
	5.5 Basic Connection ‘Evacuation Only’	12
	5.6 Spurred Speaker Connection ‘Evacuation Only’	13
	5.7 Multiple Amplifier Connection ‘Evacuation Only’	13
	5.8 Tone Control Connection	13
	5.9 Tone Control Connection using External Power Supply	14
	5.10 Microphone Pre-Amp Connection	14
	5.11 Input 3: Class Change Mode Selection	15
6	Automatic / RS485 OPERATION:	16
	6.1 LED/LCD Address	16
	6.2 LED Address	17
	6.3 Standard RS485 Connection	18
7	PROGRAMMING	19
	7.1 Factory Defaults and Voice Message	19
	7.2 Custom Tones/Messages	19
	7.3 Engineering Mode	21
8	AMPLIFIER FIRMWARE UPGRADE:	23
	8.1 FISP Programmer	23
9	SPEAKER LOADING – AMPLIFIER DC CURRENT	24
	Load capacity check	24
10	PRODUCT CODES:	25

INDEX of FIGURES

Figure 1.1: EVAC50W24V Amplifier 1
Figure 2.1: Default Tone Characteristics 2
Figure 2.2: PCB Layout 2
Figure 4.1: Microphone Pre-Amplifier 8
Figure 4.2: Remote Pre-Amplifier 9
Figure 5.1: BELL Mode 10
Figure 5.2: Tone Control Inputs 10
Figure 5.3: Basic Connection ‘Evacuation Only’ 12
Figure 5.4: Spurred Speaker Connection ‘Evacuation Only’ 13
Figure 5.5: Multiple Amplifier Connection ‘Evacuation Only’ 13
Figure 5.6: Tone Control Connection 13
Figure 5.7: Tone Control Connection using External Power Supply 14
Figure 5.8: Microphone Pre-Amp Connection 14
Figure 5.9: Class Change Timer Connection 15
Figure 6.1 S1 and S2 Locations on the PCB 16
Figure 6.2 Example Panel Address Configuration for 16 Amplifiers 17
Figure 6.3: Standard RS485 Connection 18
Figure 8.1: FISP Programmer Window for Programming a Pertronic AVR Device 23
Figure: 9.1: Amplifier Speaker Load (%) 24

INDEX of TABLES

Table 2-1: Access Points 3
Table 3-1: Amplifier Fault Conditions 6
Table 3-2: F220 Panel Fault Messages 6
Table 4-1: Mic Pre-Amp 8
Table 4-2: Remote Pre-Amplifier Connections 9
Table 4-3: Remote Pre-Amplifier DIP Switch Settings 9
Table 5-1: Spurs 11
Table 5-2: 100Vrms Line Cable 11
Table 5-3: Control Input Functions 12
Table 5-4: Input 3 Operation 15
Table 6-1: LED Addressing 17
Table 7-1: Available Tone Selection 20
Table 7-2: Input Selection 21
Table: 9-1: Approximate amplifier current vs. output load 24
Table 10-1: Product Codes 25

1 INTRODUCTION

1.1 Functional Description

The Pertronic 50W Amplifier is one of a range of 100V-Line Amplifiers manufactured by Pertronic Industries.

The amplifier generates the ‘Evacuation’ and ‘Alert’ tones with verbal messages as specified by AS2220 and ISO8201.

Any of the default tones may be replaced with one of 47 available tones, which may be programmed by using the LED Base Address dials and program DIP switches. Refer to Section 7 for more information.

The amplifier provides up to 50W (27.4Vdc supply) into connected 100V PA speakers - Pertronic PSS1, PSSB401, and PSSB501, as examples.

The 100Vrms output line is overload and short-circuit protected.

The amplifier is self-monitoring; it communicates its operating status to the panel.

The amplifier is designed for flexibility of operation. All amplifier operations may be controlled through the panel’s RS485 mimic line or through a set of signal (BELL) inputs.

The amplifier may be powered directly from the panel power supply or from a separate isolated power supply.

When not active (100V line monitoring only), the amplifier draws less than 30mA of current.

An optional microphone input board, which can be used for ‘Public Address (PA)’ or ‘Fire Microphone’ operation, is available.

Figure 1.1: EVAC50W24V Amplifier

2 SPECIFICATIONS

Circuit Board	Dimensions:	151 x 98 x 50	L x W x D (mm)
	Mounting Holes:	130 x 89	L x W (mm)
Electrical	Operating voltage:	19.2 – 28.8 Vdc	Reference 27.4 Vdc
	Quiescent Current (Basic)	30 mA @ 27.4 Vdc	
	Quiescent Current (RS485)	Additional 15 mA @ 27.4 Vdc (if controlled via RS485)	
	Operating Current	2.5 A @ 27.4 Vdc	with 50Wrms load
	Power Output:	50 W @ 100 Vrms line: 27.4 Vdc supply overload and short-circuit protected	
Monitoring	Monitored for open, short-circuit or overload (10kΩ, 2W EOL resistor).		
Tones	47 tones available, including Evacuation, Alert tones, and voice messages, as specified by AS2220 and ISO8201. Refer to Section 7.2. Programmed using the LED Base Address decade switches and DIP switches.		

Default Tone Characteristics

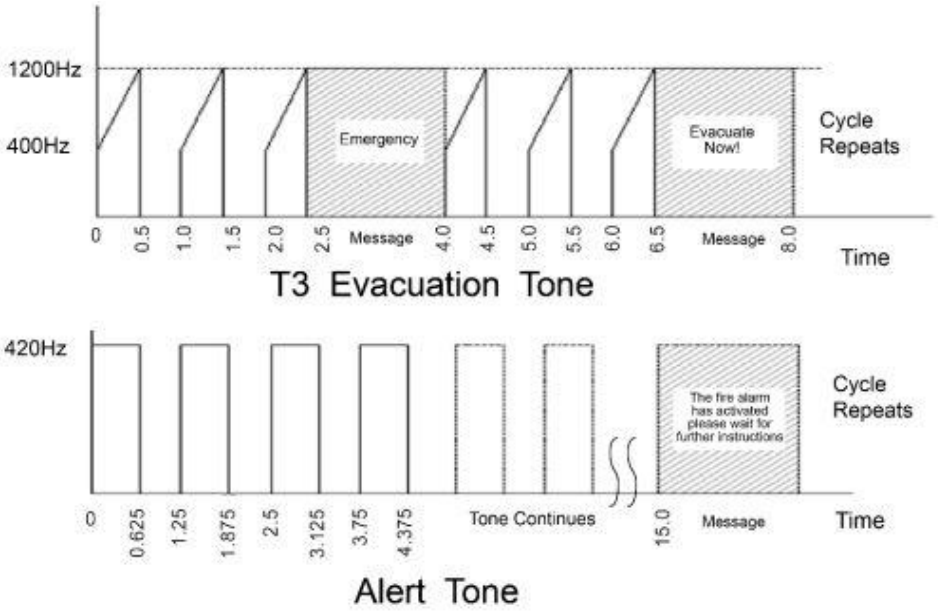

Figure 2.1: Default Tone Characteristics

2.1 PCB Layout

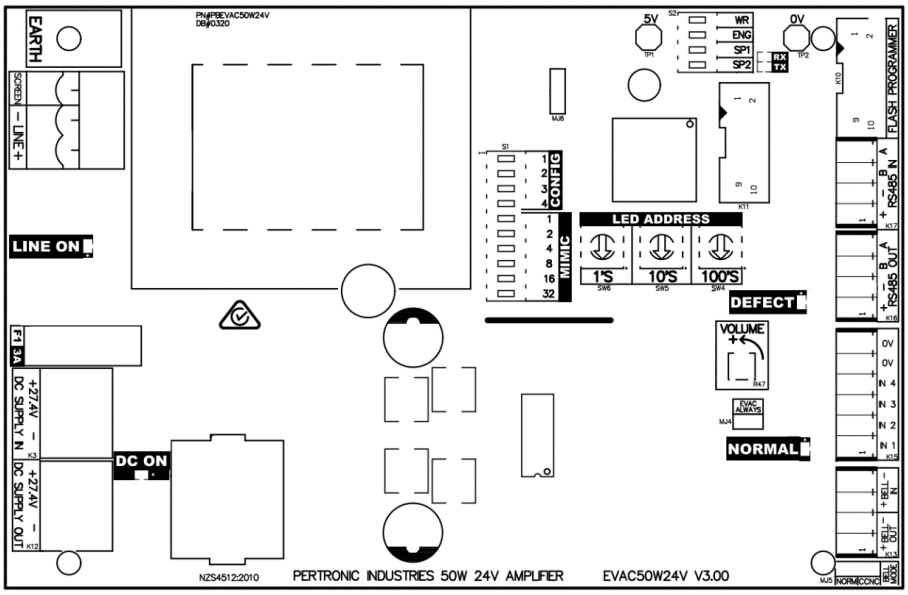

Figure 2.2: PCB Layout

2.2 Access Points

Connector	Description
K1	Earth
K2	100V Line Out
K3	24Vdc Out
K10	In Circuit Programmer (ICP)
K11	Mic Pre-Amp or JTAG
K12	24Vdc In
K13	Bell In / Bell Out
K15	Tone Select
K16	RS485 Out
K17	RS485 In

LED	Description	Colour
LED 1	DC Power ON	Green
LED 2	Defect	Yellow
LED 3	Line ON	Red
LED 4	Normal	Green
LED 5	RS485 Transmit	Green
LED 6	RS485 Receive	Green

Link	Disabled	Enabled
MJ4	Tone Select	EVAC Always
MJ5	Enables BELL Input	Enables CCNC Relay
MJ6	Mic Pre-Amp fitted	Pins 2-3 linked – no Pre-Amp fitted (Pin 3 is closest to the edge of the PCB)

DIPSWITCH S1	Function	Note	References
1	Config 1	Bell Input Override	Section 3
2	Config 2	Class Change Enable	Section 7.3.1
3	Config 3	Disable Amplifier	Section 7.3.2
4	Config 4	Enable LCD Addresses	Section 6.1; Fig. 6-1
5	Mimic Addr 1		
6	Mimic Addr 2		
7	Mimic Addr 4		
8	Mimic Addr 8		
9	Mimic Addr 16		
10	Mimic Addr 32		

DIPSWITCH S2	Function
1	WR
2	ENG
3	SP1 (Spare)
4	SP2 (Spare)

LED ADDRESS	
Switch	**Description**
SW4	100's
SW5	10's
SW6	1's

Trim Pots		
Component	**Description**	**Rating**
R47	Global Volume Preset	10 kΩ
Note: reducing volume reduces maximum output power		

Fuses		
Component	**Description**	**Rating**
F1	DC Supply	3 A

Table 2-1: Access Points

3 SYSTEM FEATURES

Basic Operation:

There are two methods for activating the amplifier tones:

- Connect a fire alarm control panel sounder circuit to the Bell Input; or
- Connect relay contacts to inputs 1, 2, or 3.

The amplifier has two distinct operating modes: **Automatic Commands** mode, and **Manual** mode.

Automatic Commands Mode:

When RS485 connected the amplifier is said to be in Automatic Commands mode. In this mode the amplifier obeys any RS485 commands **as long as the direct inputs are not active.** The direct inputs override **ANY** of the RS485 commands including warning system isolate and amplifier Isolate.

RS485 Operation: The amplifier may be configured as an LED mimic (DIP switch S1-4 = OFF and address 1 to 8) or LCD Mimic display (DIP switch S1-4 = ON and address 1 to 32).
Set the required Mimic address using DIP switches S1-5 to S1-10 as applicable.
Note: The amplifier control on the F220 uses the legacy RS485 bus, or standard RS485 on F120A or F100A panels.
Set LED number 'n' on the rotary decade address switches for Evacuation operation:
F100A max address = 253 (of 255)
F220/F120A max address = 510 (of 512)
When activated:

LED 'n' activates Input 1	default = Evacuation tone
LED 'n+1' activates Input 2	default = Alert tone
LED 'n+2' activates Input 3	default = Simulated Bell tone

Operation of 'Warning System ON' at the panel activates the Tone 1 input Evacuation tone and message.
Operation of 'Warning System Isolate' at the panel silences the amplifier in Automatic mode only.

Manual Mode: Activation of any direct input will override the RS485 commands sent by the fire control panel.
Manual mode can also be activated by operating the direct inputs alone with or without the need for **BELL IN** to be active. This operating method uses S1-1 Config 1 setting, the Bell Override Mode.

Bell Controlled: **BELL IN** input is active.
The tone generated depends on the state of Inputs 1 to 3.
When **BELL IN** is activated:

Input 1 activates Input 1 tone	default = Evacuation tone
Input 2 activates Input 2 tone	default = Alert tone
Input 3 activates Input 3 tone	default = Simulated Bell tone

Bell Override: **Bell Override Mode** (S1-1 CONFIG 1 set on).
The tone generated depends on Bell only or on activation Inputs 1 to 4.
When **BELL IN** is activated:

BELL IN activates Input 1 tone	default = Evacuation tone
Input 1 activates Input 1 tone	default = Evacuation tone
Input 2 activates Input 2 tone	default = Alert tone
Input 3 activates Input 3 tone	default = Simulated Bell tone

Refer to Table 5.3: Control Input Functions for the input priority structure.

BELL OUT may be connected to the **BELL IN** terminals of other 50W amplifiers.
The final **BELL OUT** terminal of a single or chain of amplifiers is terminated with a 10kΩ End-of-Line resistor.

Global Controls:

Input 4 (EVAC SWITCH)
When active, input 4 tone is generated (default Evacuation tone). Refer to Table 5.3: Control Input Functions for the input priority structure. If RS485 is connected, activation of input 4 results in a global Evacuation signal (Warning System ON) being sent to the panel and to other RS485 controlled Warning System devices via RS485.

MJ4 EVAC ALWAYS link
When inserted, a positive voltage on the BELL input activates the tone assigned to Input 1. Default = Evacuation tone.

MJ6 link
The MJ6 link footprint is used for Pre-Amp connection. If no Pre-Amp is fitted, then a link must be fitted between pins 2 and 3 for normal operation (pin 3 is closest to the PCB edge).
A defect is indicated if there is no link on MJ6 (when no Pre-Amp is fitted) regardless of whether the amplifier is on or off.

MJ5 'BELL MODE' link

'NORM' Position
Amplifier is activated when positive voltage is applied to the BELL input.
BELL circuit is clamped to 4kΩ when amplifier is in fault, unless set to 'CCNC' position.

'**CCNC' Position**
BELL circuit input becomes a clean-contact, normally-closed output.

NOTE:
DO NOT connect the Warning System or External Bell connection in CCNC mode. Doing so will create a **Short Circuit**! Because of having a clean-contact, normally-closed output the amplifier will not operate when positive voltage is applied to the BELL input.

In CCNC mode use either RS485, Input 3, or Input 4 (Evacuation Switch) to activate the amplifier.

100V Line Monitoring:

Notification of 100V Line monitoring faults is passed back to the fire alarm panel in two ways:

- A fault message via the RS485 bus
- Unbalancing the panel BELL circuit, which causes a 'BELL' fault at the panel. A 10kΩ, 2W EOL resistor is used as the End-of-Line device. Note that the 10kΩ EOL resistor equates to a 1W load on the amplifier.

Mic Pre-Amplifier:

The amplifier has provision for an optional Microphone Pre-Amplifier board.
This enables connection of a 'Public Address' (PA) or 'Fire' microphone.
It plugs into two connectors on the Amplifier—no separate power supply is needed.
The microphone input is balanced for maximum noise immunity.
The Line Level input (100mVrms) is provided for use of a pre-amplified signal, for example, with a remote microphone, or in a noisy environment.

Power IN/OUT:

Two connectors are provided to allow power supply connection of additional devices**.**

Indicators:

Six LEDs are provided to indicate the amplifier state as follows:

DC ON LED	LED1	Green	Turns ON when power is supplied to the amplifier
Fault LED	LED2	Yellow	Flashes when there is a Fault
Line On LED	LED3	Red	Turns ON when the amplifier 100Vrms line is activated
Normal LED	LED4	Green	Normally ON turns OFF when there is a Fault
TX LED	LED5	Green	Flashes ON when the amplifier responds via the RS485 bus
RX LED	LED6	Green	Flashes ON when the amplifier is polled via the RS485 bus

Fault Conditions: The Amplifier monitors five faults:

- DC Power Missing: Total failure of Amplifier DC Supply
- DC Power OFF Normal: The PSU voltage is outside the operating voltage range of the amplifier. Normal operating range: Refer to Specifications
- Amplifier Output Low or Overload: When the Amplifier is activated, it monitors the 100Vrms output level. If the output is low or the rated audio power output of the amplifier is exceeded, a fault is generated
- 100V, 10kΩ EOL fault: Speaker Circuit wiring fault
- RS485 Communication fault:
    - RS485 wiring fault
    - Incorrect RS485 LED or LCD Mimic Address
    - Incorrect panel mimic programming
    - LED Base Address Set to 0

Faults are reported to the panel (except the F220) are shown in **Table 3-1**

Fault	Bell Circuit Monitor	RS485 Message	Fault LED
DC Power Supply Missing	EOL clamped to 4kΩ	LED Mimic xx Missing	OFF
DC Power Supply 'Off Normal'	EOL clamped to 4kΩ	LED Mimic xx Fault Int.	1st Flash Long
Amplifier Output Low or Overload Fault or MJ6 not fitted	EOL clamped to 4kΩ	LED Mimic xx Fault Int.	2nd Flash Long
100V 10kΩ EOL Fault	EOL clamped to 4kΩ	LED Mimic xx Fault.	3rd Flash Long
RS485 Communication Fault	EOL clamped to 4kΩ	LED Mimic xx Missing	4th Flash Long
DC Power Supply 'Off Normal' History	Normal	Normal	5th Flash Long
Amplifier Output Low or Overload Fault History or MJ6 not fitted	Normal	Normal	6th Flash Long
100V 10kΩ EOL Fault History	Normal	Normal	7th Flash Long
RS485 Communication Fault History	Normal	Normal	8th Flash Long
Amplifier Isolated	EOL clamped to 4kΩ	LED Mimic xx Fault	9th Flash Long

Table 3-1: Amplifier Fault Conditions

Note: EOL clamped to 4kΩ = 6k8 (when amplifier in fault) in parallel with 10k EOL on amplifier Bell input.

Faults messages are reported on F220 Panel as follows:

Fault	Location	RS485 Fault Message
DC Power Supply	LED Mimic/WarnSys n	Timeout
DC Power Supply 'Off Normal'	LED Mimic/WarnSys n	Display Fault
Amplifier Output Low or Overload Fault	LED Mimic/WarnSys n	Aux Fault I/P
100V 10k EOL Fault	LED Mimic/WarnSys n	Aux Fault I/P
RS-485 Communication Fault	LED Mimic/WarnSys n	Timeout
Amplifier Isolated	LED Mimic/WarnSys n	Aux Fault I/P

Table 3-2: F220 Panel Fault Messages

To clear a latched Fault history indication, remove and re-apply power to the amplifier.

Voice Messages

Evacuation: 'Emergency, Evacuate now!'

Alert: 'Warning, the fire alarm system has operated. Stand by for further instructions'

Custom Messages

The ‘Evacuation’ and ‘Alert’ messages may be replaced by customer defined (or custom) messages, upon request.
Customer-defined messages are recorded by Pertronic Industries and embedded within the amplifier flash memory. All custom messaging must fit within the memory space available.
Please contact Pertronic Industries for further information and costing.

Custom message examples:

1. ‘Occupants to exit via exits at the front of the cinema’
2. ‘Occupants to exit via their nearest exit’
3. ‘Evacuate this fire cell using the nearest safe exit’
4. ‘Fire Alarm activated in adjacent block. Please evacuate now!’
5. ‘You can now enter the building’
6. ‘Evacuate to the East Building Zone’
7. ‘Evacuate to the West Building Zone’
8. ‘Prepare to evacuate to the next fire cell’

Note: The ISO8201 T3 Evacuate message cannot exceed 1.5 seconds in duration.

4 MIC PRE-AMPLIFIER

4.1 Product Overview:

A daughter board designed to enable connection of a ‘Public Address’ (PA) or ‘Fire’ microphone to the Pertronic Industries 50W Amplifier.

The microphone input is balanced for maximum noise immunity and is designed specifically for moving-coil microphones.

It easily connects to the 50W Amplifier by plugging it into two connectors, K11 and MJ6, on the 50W Amplifier. Note that MJ6 must have a link between pins 2 and 3 if a Pre-Amp board is not fitted (Pin 3 is closest to the edge of the PCB).

No separate power supply or connection is needed.

A switch input monitors a ‘Push to Talk’ (PTT) switch.

A Line Level input (100mVRMS) is provided for use of a pre-amplified signal, for example, with a remote microphone or in a noisy environment.

Links are available on the board for selecting the amplifier’s operational mode: ‘PA’ or ‘Fire’ microphone.

An ‘Output Level’ control potentiometer is available for pre-amplifier gain adjustment.

Link Selected	Normal	Alarm
PA	Operational	Disabled
FIRE	Operational	

Table 4-1: Mic Pre-Amp

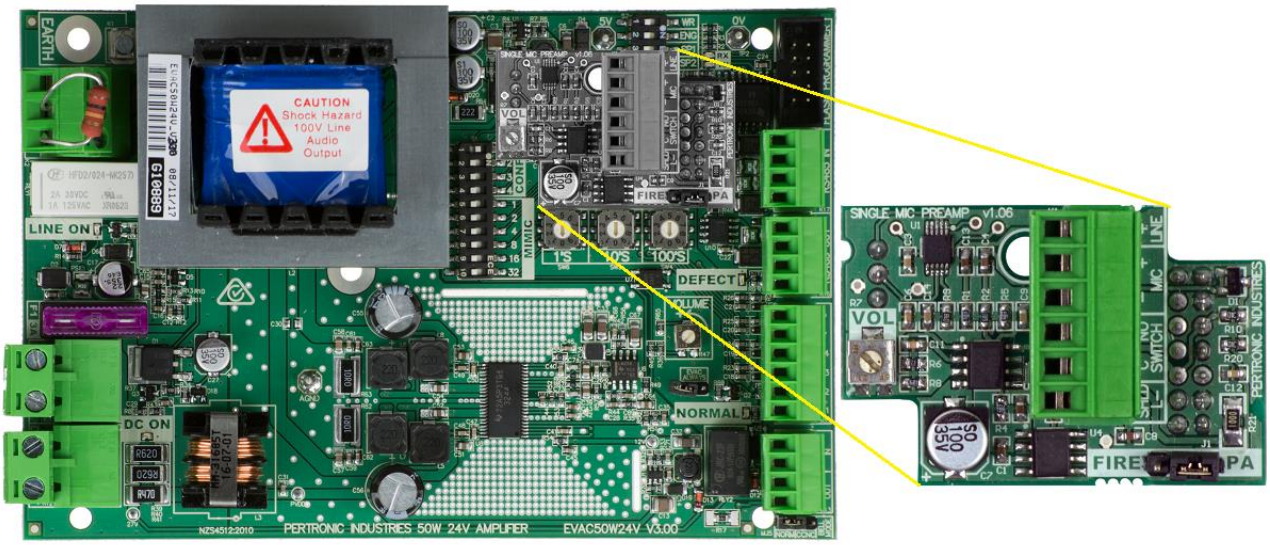

Figure 4.1: Microphone Pre-Amplifier

Specifications:

Microphone Input Sensitivity:	1.5mVrms - 15mVrms
Microphone Input Impedance:	680Ω
Line Input Sensitivity:	100mV – 1.5Vrms
Line Input Impedance:	68kΩ
Frequency Response:	400Hz to 20KHz
Current Consumption:	< 1mA
Recommended Cable:	0.2mm^2 4-core twisted wire shielded audio cable
Maximum Length:	5 metres maximum
Maximum Daisy Chained Mic Inputs:	4
Maximum Daisy Chained Line inputs:	10
Compatible 50W Amplifier Hardware:	v2.02 and above
Compatible 50W Amplifier Software:	v1.80 and above

4.2 Remote Pre-Amp Board

The Redback A2055A Pre-amplifier module (PREAMP-RB) boosts the input level to the Pertronic 50W Amplifier Pre-amp board, and is used for these situations:

- where the microphone is connected at distances too great to operate at microphone level input, or
- where the microphone input is feeding more than four (4) amplifiers.

The Redback A2055A Pre-amplifier contains a selectable balanced / unbalanced microphone input, and two aux inputs. It may be connected directly into the 50W Amplifier's Pre-amp 'LINE' input. The Redback pre-amplifier may be powered from the panel 24Vdc monitored supply, or from a remote 15V to 30Vdc supply. It is recommended that the panel supply be used because its power is monitored.

4.2.1 Installation

Connections

Desktop Microphone	Fist Microphone	Redback A2055A Pre-Amp	50W Pre-Amp	Power Supply
3 Microphone +ve	2 Microphone +ve	MIC +ve		
2 Microphone -ve	3 Microphone -ve	MIC -ve		
1 Microphone Shield	1 Microphone Shield	GND		
4 PTT +ve	5 PTT +ve		SWITCH N/O	
5 PTT –ve	4 PTT –ve		SWITCH COM	
		Output +ve	LINE +	
		Output 0V	SHLD L-	
		Mic Cable Shield	SHLD L-	
		Power +		+24 Vdc
		Power 0V		0 V
		Power -		

Table 4-2: Remote Pre-Amplifier Connections

Note: "PTT -ve" may be linked to the "Microphone Shield" inside the microphone.

DIP switch settings

Switch	Setting	Selected function
SW1	OFF	Balanced microphone
SW2	OFF	No phantom power for the microphone.
SW3	OFF	Not used
SW4	OFF	Single rail dc supply

Table 4-3: Remote Pre-Amplifier DIP Switch Settings

Failure to connect the microphone Shield may reduce the quality of the signal received by the 50W Amplifier Pre-amp, however the shield must not be connected to panel Earth because Earth Leakage currents caused may also impact the quality of the signal received.

4.2.2 Wiring Diagram:

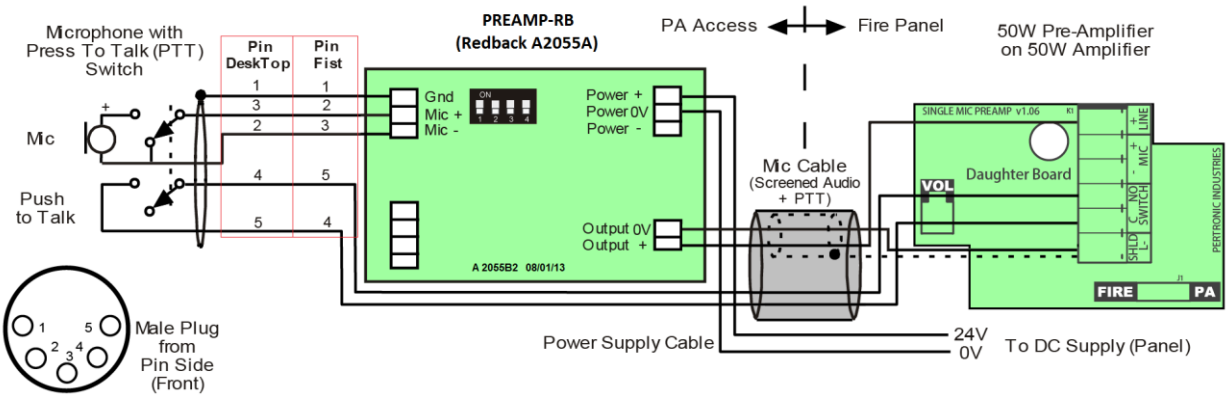

Figure 4.2: Remote Pre-Amplifier

5 INSTALLATION

5.1 Power Supply

The 50W amplifier connects to the panel supply via the 'DC IN' connector located at the top right of the board. The 'DC OUT' connector may be used to supply power to additional amplifiers. The DC supply must be connected at all times to enable the amplifier to monitor the 100Vrms line output. The panel battery or separate supply must be capable of delivering up to 2.5 Amps when the amplifier is fully loaded and active. The panel BELL circuit is isolated, and it cannot be used to provide power to the amplifier; therefore, it is used only for amplifier activation and monitoring.

5.2 BELL Mode

The BELL circuit may operate in one of two modes configured by link MJ5 labelled 'BELL MODE'.

NORM: with the link placed in the normal position, a positive voltage on the BELL input activates the amplifier. When an 'Off-Normal' condition occurs the amplifier changes the BELL circuit EOL resistor value.

CCNC: with the link in the 'CCNC' position, the BELL input becomes a **C**lean **C**ontact, **N**ormally **C**losed relay output for external fault monitoring. Voltage must not be applied to the BELL input in CCNC mode because the normally-closed contact is a short circuit.

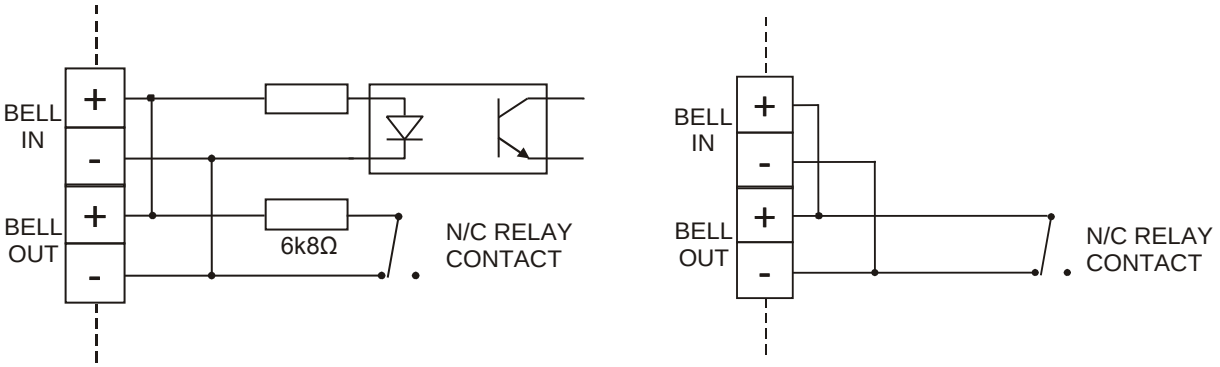

Figure 5.1: BELL Mode

5.2.1 Tone Control Inputs

Four inputs are provided for tone selection. Inputs are active low; so must be pulled to 0V to operate.

Inputs 1 and 2 determine the tone generated when 'BELL IN' is activated (reversed).

Input 4 activates the amplifier independently of the 'BELL IN' status.

Input 3 can be programmed to operate either in conjunction with or independent of 'BELL IN'.

Refer to Section 7: Programming for further details.

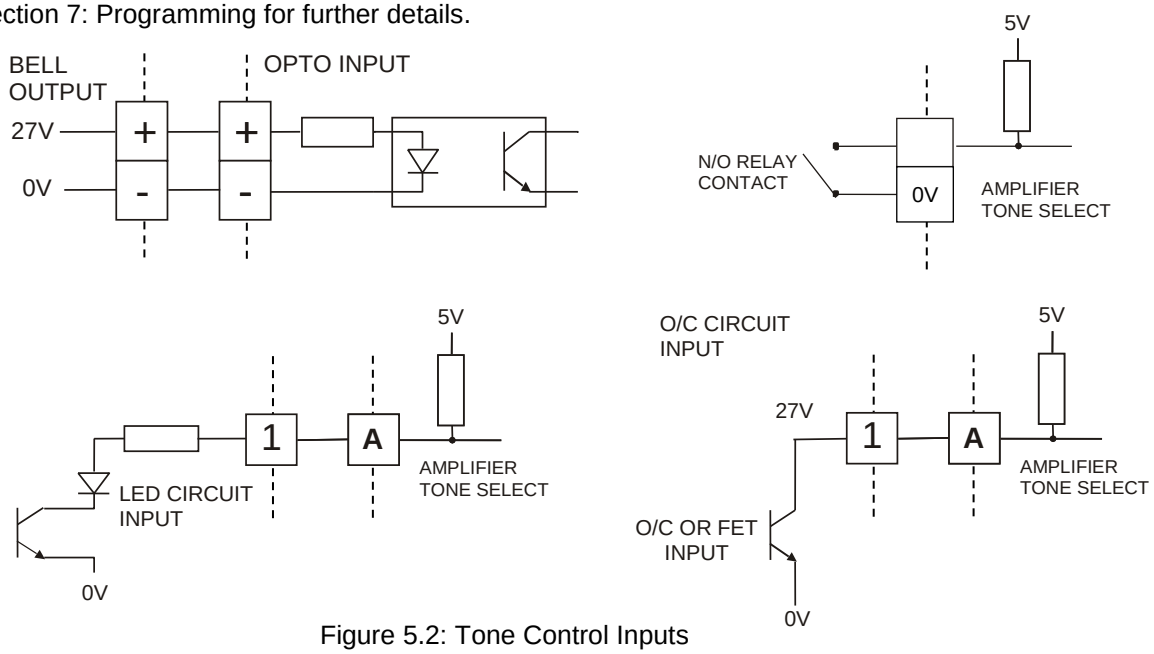

Figure 5.2: Tone Control Inputs

When the amplifier is powered from an isolated external power supply, the 'Relay Connection' method must be used to maintain isolation from the panel supply.

5.3 100V Line Output

In the 'Normal' state, the 50W Amplifier monitors the 100V line via a 10kΩ, 2W EOL resistor.
In the 'Alarm' state, the amplifier disconnects the EOL monitoring circuit and provides a 100Vrms tone and message on the loudspeaker circuit.
In the 'Alarm' state, the amplifier is monitored for overload conditions, but 10kΩ EOL monitoring ceases. Note that the EOL resistor is still in-circuit and loads the line; its presence is simply not monitored.

The 100Vrms Line may be spurred, provided there are no more than three spurs maximum. If spurred the EOL Resistor value must be changed to provide the correct monitoring to the amplifier. Refer to Table 5.1.

Number of Spurs	EOL Resistor Value for Each Spur
1	1x 10kΩ, 2W
2	1x 22kΩ, 0.5W on each spur
3	1x 33kΩ, 0.5W on each spur

Table 5-1: Spurs

PA Speakers used with the 50W Amplifier must be capacitively-coupled and rated to 100Vrms. The capacitor must be bipolar and able to withstand 200V peak line voltage. The value should be about 1µF per watt of power for each speaker.

A common problem of 100Vrms PA installations is the coupling of unwanted noise into the 100V line. Although the 50W Amplifier has been designed to reduce the effects of coupled noise, it is recommended practice that all 100V line wiring be separated from ALL OTHER wiring by at least 25cm. This includes Mains wiring, ELV wiring, Loop wiring and telephone wiring.

Loading of the 100Vrms line must not exceed 50W. Maximum cable capacitance must remain below 100nF. Excessive load or cable capacitance may cause the amplifier to current-limit and to shut down.

The 50W amplifier is a Class A product. In a domestic environment, this product may cause radio interference, and the user may need to take adequate measures to reduce interference.

It is recommended that audio cable is used when installing 100Vrms Speaker lines. **Table 5-2** lists a typical specification for a cable suitable for 100Vrms.

Feature	Specification
Resistance	0.032ohms/m (return)
Capacitance	80pF/m
Maximum Cable Run	1Km

Table 5-2: 100Vrms Line Cable

Design Example

An installation requires an amplifier to supply 50 x 1W speakers located at the end of a 1km length of audio cable. Required specifications include the following:

- Resistance using 1km of audio cable 32Ω
- Volt drop at end of cable (V = IR) 16Vrms
- Power reduction across speaker (PdB = 10Log(Vout/Vin) 0.7dB
- Cable capacitance (80pF/m) 80nF

5.4 Direct Input Operation

The amplifier's 'BELL IN' terminals '+' and '-' connect to the corresponding '+' and '-' terminals on the Fire Alarm Panel. The 'BELL OUT' terminal may be used to daisy-chain amplifiers together when more than 50W of speaker power is required.

NOTE: The amplifier's 100Vrms line output must not be connected to the 100Vrms line output of another amplifier; doing so may cause the amplifiers to malfunction.

The requirement for Panel Bell to be active for amplifier activation is optional. To enable this feature set S1-1 CONFIG 1 to on.
When the inputs are activated, the corresponding tone is produced when the BELL IN is activated. If multiple inputs are triggered simultaneously, then the tone with the highest priority is produced—refer to **Table 5-3**.

Bell Override (S1-1 CONFIG 1)	**Panel Bell**	**Input 1**	**Input 2**	**Input 3**	**Input 4** (Evac Switch)	**Input with Priority**	**Default Tone**
OFF	OFF	o	o	o	OFF	None	None
OFF	OFF	o	o	o	ON	Input 4	Evac with voice
OFF	ON	OFF	OFF	OFF	OFF	None	None
OFF	ON	OFF	OFF	ON	OFF	Input 3	Simulated Bell
OFF	ON	OFF	ON	o	OFF	Input 2	Alert with voice
OFF	ON	ON	o	o	OFF	Input 1	Evac with voice
ON	OFF	o	o	o	OFF	None	None
ON	OFF	o	o	o	ON	Input 4	Evac with voice
ON	ON	o	o	o	OFF	Input 4	Evac with voice
ON	OFF	ON	o	o	OFF	Input 4	Evac with voice
ON	OFF	OFF	ON	o	OFF	Input 2	Alert with voice
ON	OFF	OFF	OFF	ON	OFF	Input 3	Simulated Bell
		Highest ←	**Priority** ←	Lowest			o = optional

Table 5-3: Control Input Functions

With the 'Evac Always' link (MJ4) inserted, the amplifier produces Input 1 tone (default Evacuation tone and voice) when the 'BELL IN' is activated. This link removes the need to wire the Input 1 'Evacuation' input to the BELL circuit.

5.5 Basic Connection 'Evacuation Only'

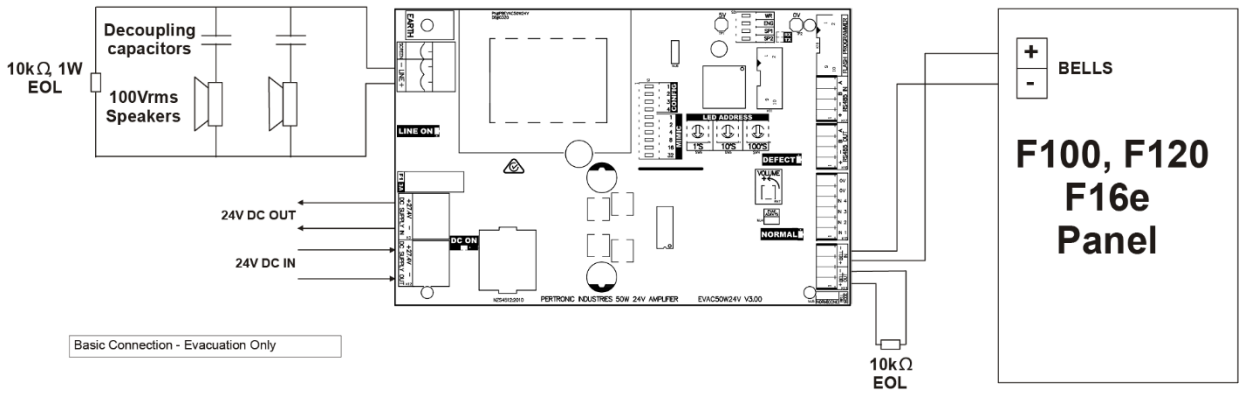

Figure 5.3: Basic Connection 'Evacuation Only'

5.6 Spurred Speaker Connection ‘Evacuation Only’

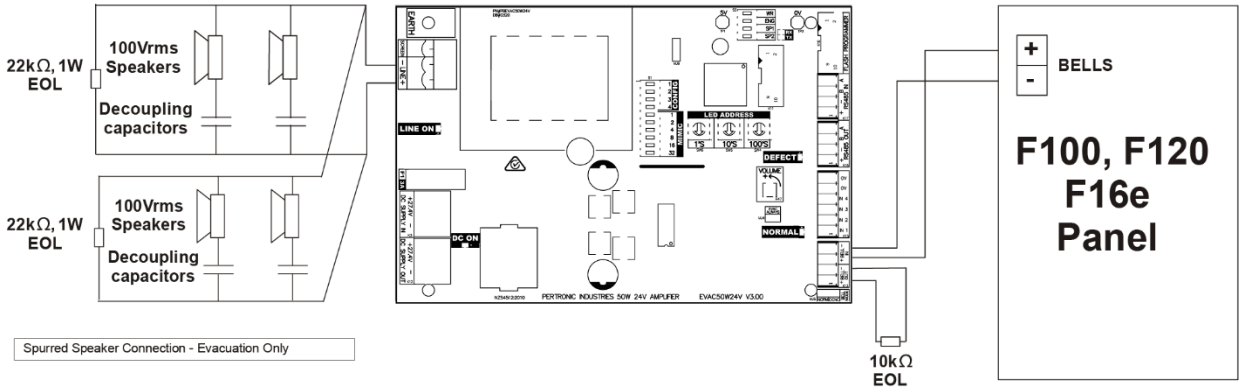

Figure 5.4: Spurred Speaker Connection ‘Evacuation Only’

5.7 Multiple Amplifier Connection ‘Evacuation Only’

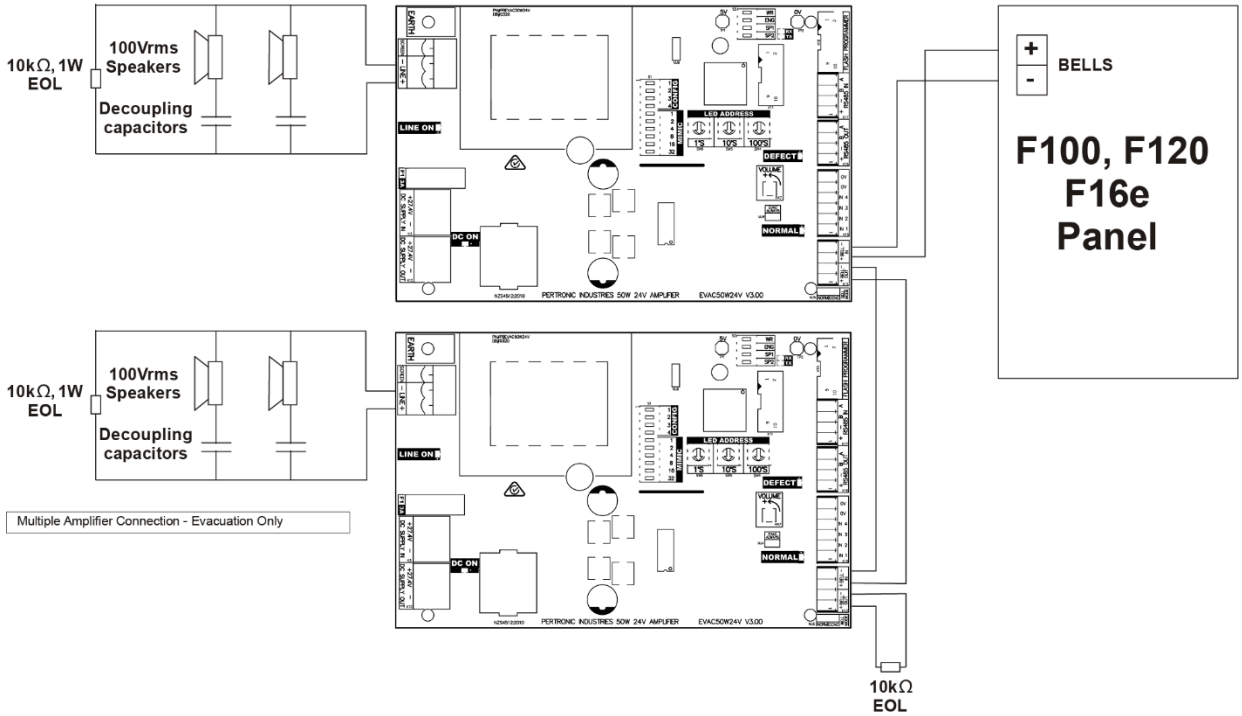

Figure 5.5: Multiple Amplifier Connection ‘Evacuation Only’

5.8 Tone Control Connection

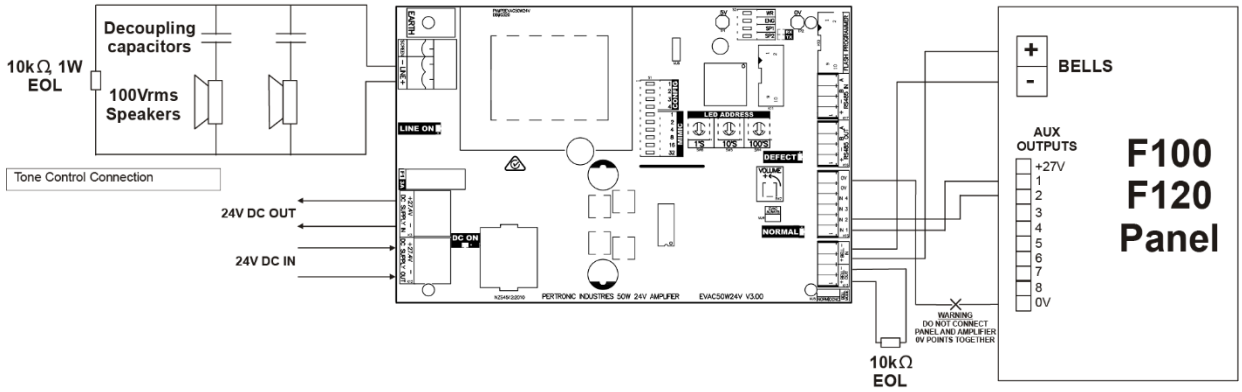

Figure 5.6: Tone Control Connection

5.9 Tone Control Connection using External Power Supply

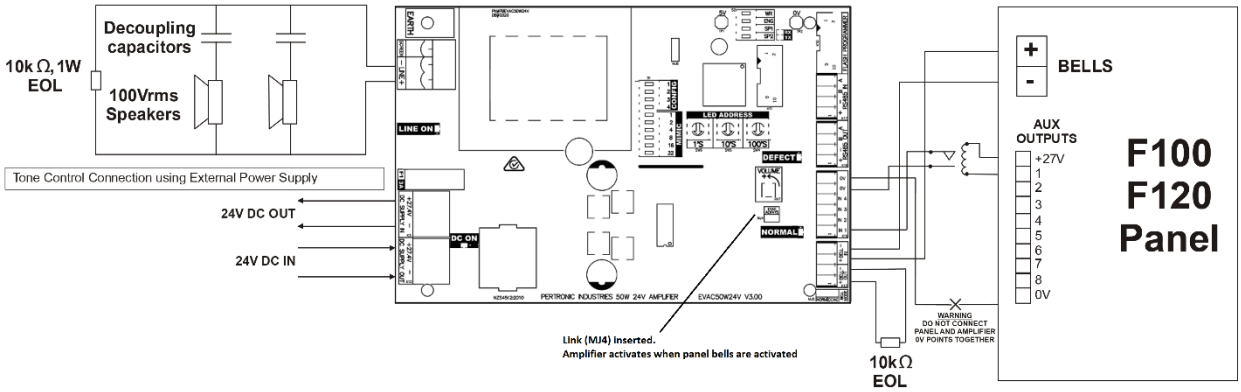

Figure 5.7: Tone Control Connection using External Power Supply

5.10 Microphone Pre-Amp Connection

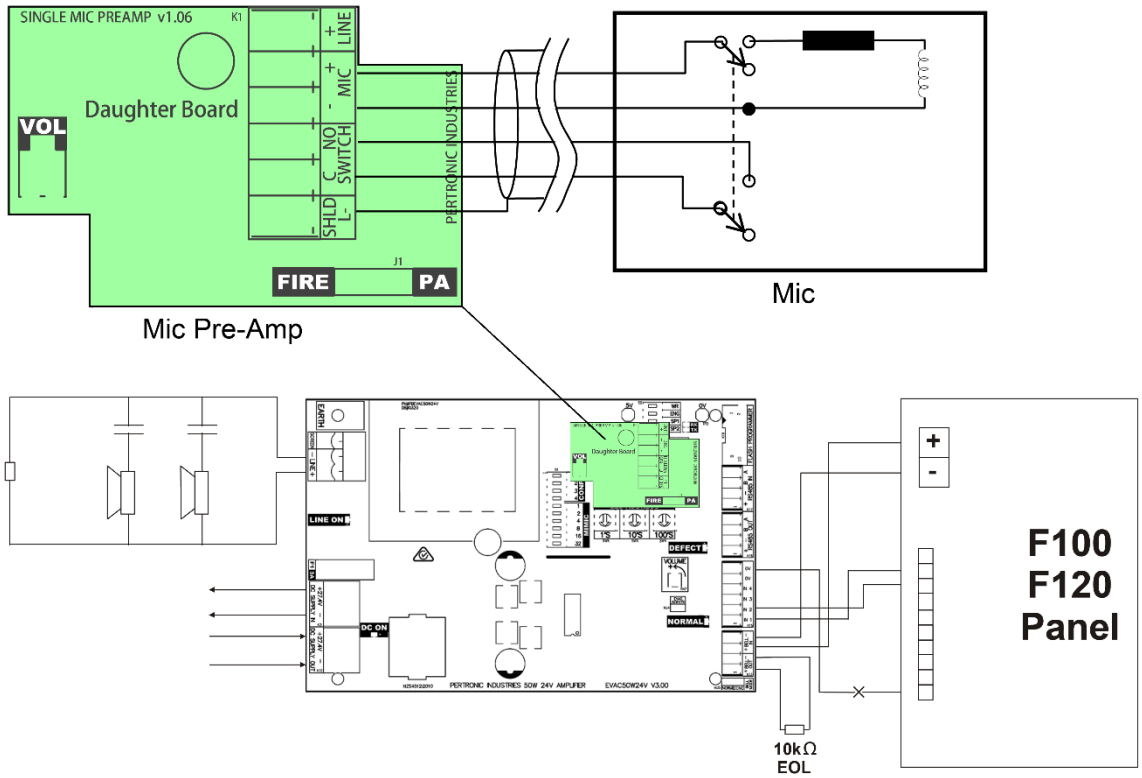

Figure 5.8: Microphone Pre-Amp Connection

5.11 Input 3: Class Change Mode Selection

Input 3 provides an optional ‘School Bell’ feature, where the amplifier may be used as a ‘School Bell’ system, often with a 7-Day Timer. In this mode, the amplifier may be activated by either a rising or falling edge on Input 3. To Enable the class change mode, Set S1-2 CONFIG 2 to on.

The default ring duration is 1 Second; to change the ring duration, follow these steps:

1. Set S2-2 ENG to on to access ‘Engineering Mode’.
   a. Select the mode to be configured by setting LED ADDRESS Dial SW6 1s to 5 to select class change period,
   b. Select the duration of the tone operation setting LED ADDRESS Dial SW5 10s to choose the desired setting:
      0 = 0.5 sec,
      1 = 1 sec,
      2 = 2 secs, and so on through
      9 = 9 secs.
2. Momentarily set S2-1 WR to on.
3. Check that the input has been configured to operate as desired.

The duration of the School Bell has been limited to 9 seconds to ensure the amplifier does not discharge the battery. The default ‘School Bell’ (Tone 07) is a recorded school bell. Due to the nature of recording analogue signals, the output level of this signal is about 12dB below that of the digital signals. Alternative tones, which may be used for ‘School Bell’ operation, include the following:

- Tone 37 for 5 seconds 1000/650Hz Two-Tone Chime
- Tone 21 for 3 seconds 800Hz 0.25sec ON, 1 sec OFF—Intermittent
- Tone 08 for 3 seconds PA400 Tone

To maintain separation between the Fire Alarm panel and auxiliary equipment, the School Bell Timer should not be installed within the Fire Panel.

Note: The Class Change Mode operates irrespective of the state of the fire panel’s Warning System Isolate.

RS485 Inputs	Sounder Circuit Inputs				Global Inputs	Amplifier Output
	BELLS INPUT	INPUT 1	INPUT 2	INPUT 3	INPUT 4 (EVAC SW)	
OFF	OFF	OFF	OFF	OFF	OFF	No Tone
OFF	o	OFF	OFF	State Change	OFF	Configured Tone for 0.5 to 9 sec
LED ‘n+2’	OFF	OFF	OFF	OFF	OFF	Configured Tone for 0.5 to 9 sec
Inputs marked ‘o’ are optional						

Table 5-4: Input 3 Operation

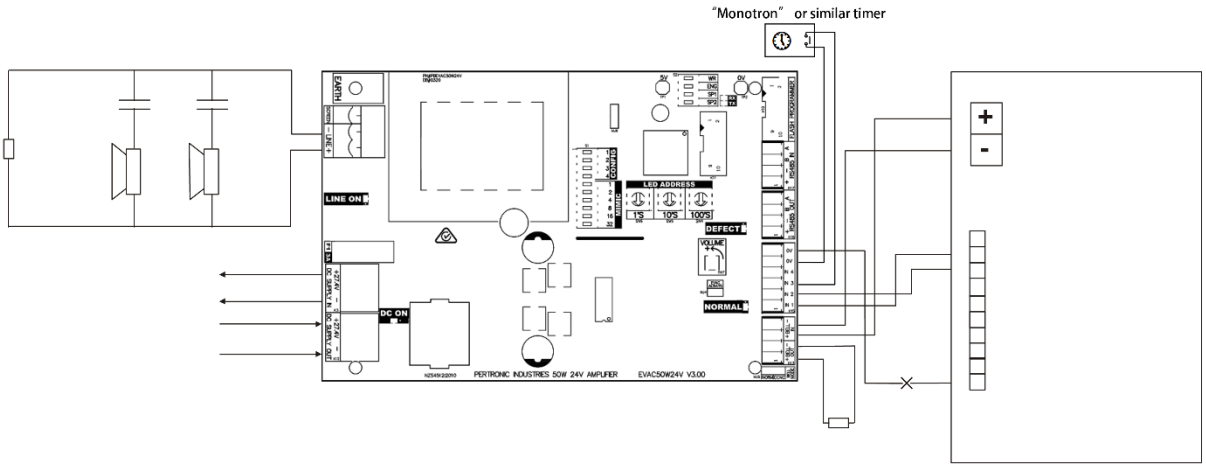

Figure 5.9: Class Change Timer Connection

6 Automatic / RS485 OPERATION:

The amplifier can be fully controlled from a **Pertronic F220** (RS485 legacy bus) **F120A** or **F100A** RS485 connection, removing the need for separate 'BELL IN' and tone control wiring. The amplifier's RS485 driver is isolated, reducing the risk of fault currents and overloading of the RS485 in case the panel's power supply is wired incorrectly.
NOTE: the Panel RS485 connection must not be used to power the amplifier.

6.1 LED/LCD Mimic Address

LED MIMIC Mode

The amplifiers operate from the RS485 bus as individual amplifiers, with each amplifier having a unique address that is not used by any other LED mimic device. In standard operating mode, the amplifier is configured in the panel as an LED Mimic.

The address on each amplifier is set by the switches S1-5 MIMIC ADDR 1 through to S1-8 MIMIC ADDR 8. Switches S1-9 MIMIC ADDR 16 and S1-10 MIMIC ADDR 32 must be set to off. Up to 32 RS485 devices (LCD Mimic, LED Mimic, Amplifiers, etc.) may be connected to the RS485 bus. Each Amplifier is daisy-chained to the panel RS485 using the 'RS485 In' and 'RS485 Out' terminals.

The panel monitors the number of polled devices it is expecting to have connected and will report a fault condition if a device is missing.

LCD Address Mode

If a panel is required to monitor more amplifiers than it is normally capable of, the LCD Address mode can be enabled. LCD Address mode changes how the amplifier appears to the F220F120/F100 Fire Panel RS485 bus: instead of appearing as an LED mimic, the 50W amplifier will appear as and will respond as an LCD mimic. This allows additional amplifiers to be simultaneously connected and monitored. With this mode enabled, the amplifier reports defects by simply not responding to LCD mimic polls.

The amplifiers support F220/F120/F100 LCD mimics. LCD Address mode is enabled by setting S1-4 CONFIG 4 on. With S1-4 CONFIG 4 off, the standard LED mimic operation applies. When using the LCD Address mode, the number of devices that can be connected to a panel using the LCD Address mode is determined by the panel, currently 32 for the F220/F120A and 8 for the F100A.

Amplifier Monitoring

A maximum of 16 amplifiers can be connected to the RS-485 bus. F220, F120 and F100 panels are able to monitor LCD and LED addresses 1-8 for defects from amplifiers. A defect on the amplifier or disconnection of the amplifier from the RS-485 bus will result in a defect on the panel.

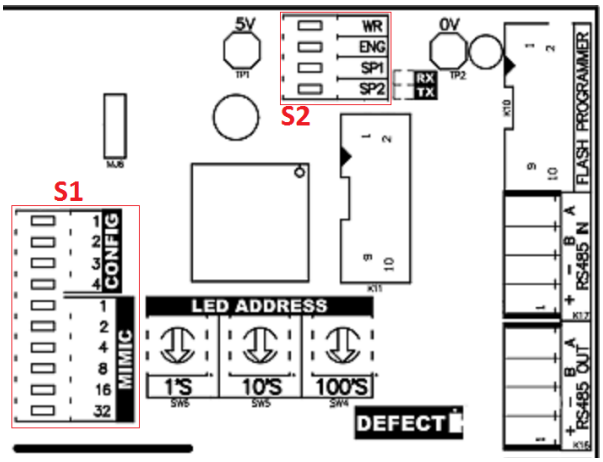

Figure 6.1 S1 and S2 Locations on the PCB

Amplifier configured as a LED Mimic		Amplifier configured as a LCD Mimic	
Amplifier Number	**RS-485 Address as LED Mimic**	**Amplifier Number**	**RS-485 Address as LCD Mimic**
1	1	9	1
2	2	10	2
3	3	11	3
4	4	12	4
5	5	13	5
6	6	14	6
7	7	15	7
8	8	16	8

Figure 6.2 Example Panel Address Configuration for 16 Amplifiers

6.2 LED Address

Each amplifier has three decade switches for selecting the base LED address to activate the amplifier. Three sequential LED numbers select the tone which will be produced on activation—refer to Table 5.1.

LED Number	Input	Default Tone Generated
Base LED address	Input 1	Tone 05: T3 Evacuation tone and voice
Base LED address +1	Input 2	Tone 03: Alert tone and voice
Base LED address +2	Input 3	Tone 07: Simulated Bells
Panel Warn System On	Input 4	Tone 05: T3 Evacuation tone and voice

Table 6-1: LED Addressing

A single LED address may be used for different amplifiers when common activation is required; however, care must be taken to avoid address overlap where amplifiers are required to activate separately.
When connected to the amplifier the **F100A** can control up to 255 LED addresses, and the **F220/F120A** can control 512 LED addresses. While the F16e has an RS485 bus, the firmware does not provide control of the amplifier.
For large systems, it is suggested that an LED address region be reserved for amplifier control, for example, reserving LED Addresses between 101 and 200 for amplifier use only.

6.3 Standard RS485 Connection

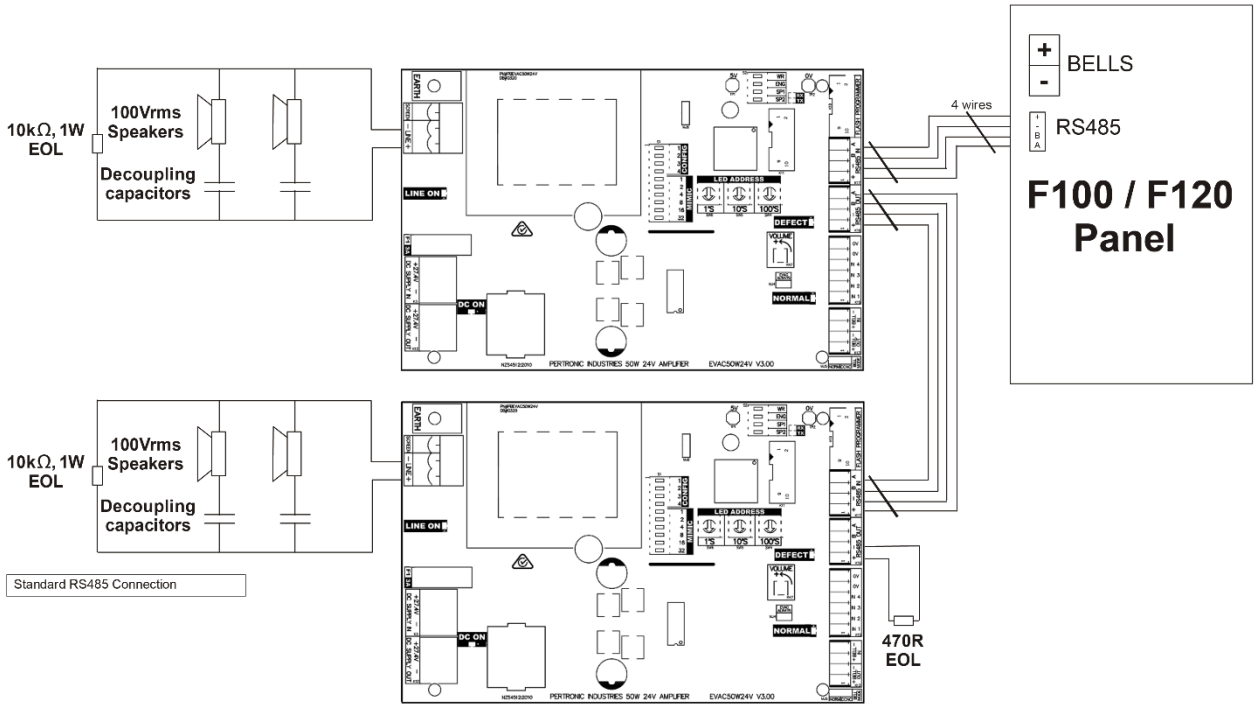

Figure 6.3: Standard RS485 Connection

7 PROGRAMMING

Engineering Mode is used to configure the tone selections, see section 7.3.
The tones generated by the inputs may be changed to any of 47 pre-programmed tones. These tones are common to both direct input and RS485 trigger modes. See **Table 7-1** for the list of available tones.
The Amplifier configuration is stored in non-volatile memory and is retained in the event of power failure.

7.1 Factory Defaults and Voice Message

As supplied, the Amplifier is setup for standard 'Evacuate', 'Alert', PA400 tones, and messages. Pertronic Industries has adopted the following voice messages for the Evacuation and Alert Tones:

- Input 1 Evacuate Input: Tone 5: T3 Evacuation Tone with Voice
- Input 2 Alert Input: Tone 3: AS2220 Alert Tone with Voice
- Input 3 School Bell Input: Tone 7: Simulated Bells
- Input 4 Evacuation Switch Input: Tone 5: T3 Evacuation Tone with Voice
- Evacuation Message: 'Emergency, Evacuate Now!'
- Alert Message: 'Warning, the Fire Alarm system has operated, stand by for further instructions'

7.2 Custom Tones/Messages

Custom tones/messages additional to **Table 7-1** can be created on request, please contact Pertronic Industries for more information.

Tone	100s Dial	10s Dial	Tone
00	0	0	Tone Programming Test - 1's Dial plays current programmed tone.
01	0	1	500-1200Hz 3.75 sec / 0.25sec. AS2220 Evacuation Tone with Voice
02	0	2	500-1200Hz 3.75 sec / 0.25sec. AS2220 Evacuation Tone Only
03	0	3	420Hz 0.625 sec ON, 0.5 sec OFF – Intermittent Alert Tone with Voice: AS2220
04	0	4	420Hz 0.625 sec ON, 0.5 sec OFF – Intermittent Alert Tone Only: AS2220
05	0	5	T3 Cadence Tone with Voice
06	0	6	T3 Cadence Tone Only
07	0	7	Simulated Bells
08	0	8	PA400 Tone
09	0	9	Claxon (Star Trek)
10	1	0	400- 700Hz 1.5 sec Whoop
11	1	1	800 / 1000Hz @ 1 Hz - Sweeping
12	1	2	400 / 450Hz @ 0.5Hz Tone.
13	1	3	2400 / 2900Hz @ 7Hz - Sweeping
14	1	4	2400 / 2900Hz @ 1Hz - Sweeping
15	1	5	500 / 1200Hz @ 1Hz - Sweeping
16	1	6	1200 / 500Hz @ 1Hz - DIN / PFEER Prepare to Abandon Platform
17	1	7	2400 / 2900Hz @ 2 Hz - Alternating
18	1	8	1000 Hz @ 1Hz - Intermittent
19	1	9	800 / 1000Hz @ 0.875Hz - Alternating
20	2	0	2400Hz @ 1Hz Intermittent
21	2	1	800Hz 0.25 sec ON, 1 sec OFF - Intermittent
22	2	2	800Hz - Continuous
23	2	3	660Hz 150mS ON, 150mS OFF - Intermittent
24	2	4	544Hz (100mS) / 440 Hz (400mS) - NF S 32-001
25	2	5	660Hz 1.8 seconds ON, 1.8 seconds OFF - Intermittent
26	2	6	1.4kHz-1.6kHz, 2Hz
27	2	7	660Hz - Continuous
28	2	8	544Hz / 440Hz @ 1Hz - Alternating
29	2	9	544Hz @ 0.875 seconds - Intermittent
30	3	0	800Hz @ 2Hz - Intermittent
31	3	1	800 / 1000Hz @ 25Hz – Sweeping
32	3	2	2400 / 2900Hz @ 25Hz – Sweeping
33	3	3	554Hz – Continuous
34	3	4	440Hz – Continuous
35	3	5	800 / 1000Hz @ 7Hz – Sweeping
36	3	6	660 / 1200Hz @ 1Hz – Sweeping
37	3	7	1000/650Hz Two-Tone Chime.
38	3	8	745Hz @ 1Hz Intermittent
39	3	9	1000 & 2000Hz @ 0.5 sec Alternating
40	4	0	1000Hz Continuous - PFEER Toxic Gas
41	4	1	2000Hz Continuous
42	4	2	1200Hz Continuous
43	4	3	800Hz / 1000Hz @ 4HZ Alternating as per E2S tone 2
44	4	4	RH3 Tone 500-1400Hz @ 5Hz repetition rate
45	4	5	‘SOS’ in Morse code
46	4	6	300Hz - 1400Hz - 300Hz sweep
47	4	7	3480 Hz pulsed at 130ms on/off – PLS

Table 7-1: Available Tone Selection

7.3 Engineering Mode

To listen to the current tones, set all of the LED ADDRESS DIALs to 0, and then set both programming switches S2-2 ENG and S2-1 WR to on. The Defect LED identifies the operating mode of Input 3—refer to 7.3.1. The amplifier enters demo mode after 5 seconds. Select the required input using LED ADDRESS Dial SW6 1s. In 'Engineering Mode', the amplifier signals a defect to the panel via the BELL OUT and RS485 bus. This defect remains while the switch S2-2 ENG is set on, switch S2-2 ENG link must be set off for the amplifier to return to Normal. Caution must be taken not to leave the amplifier with an incorrect LED address after programming.

To amend the configuration, follow these steps:

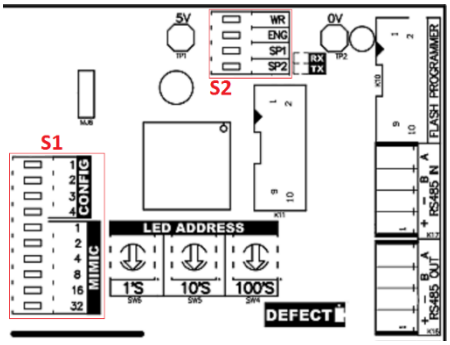

1. Set switch S2-2 ENG to on to access 'Engineering Mode'.
   The 50W amplifier has 3 decade switches labelled 1's, 10's, and 100's. In engineering mode, these dials have a dual purpose:
   - to select which input to program
   - to select the mode in which Input 3 operates
2. Select the input to be amended by switching Dial 1's to the relevant setting as indicated in Table 7.2:
   - 1 for Input 1
   - 2 for Input 2
   - 3 for Input 3
   - 4 for Input 4
3. Switch Dials 10's and 100's to select one of the 47 available tones—refer to Table 7.1
   For example, to change Input 3 to 440Hz continuous, Tone 34, follow these steps:
   - Set Dial 1's to 3
   - Set Dial 10's to 4
   - Set Dial 100's to 3
4. Momentarily set S2-1 WR to on.
5. To verify that the input has been amended as required, set S2-1 WR to on, Tone 3 will sound after 5 secs.
6. Set switches S2-2 ENG and S2-1 WR to off.

Dial 1's Position	Assignment	Description
0	Restore defaults	Dials 10's and 100's must be set to 9.
1	Input 1 Tone Select Default = Evacuation (Tone 05)	Use Dials 10's and 100's to select tone from Table 6
2	Input 2 Tone Select Default = Alert (Tone 03)	Use Dials 10's and 100's to select tone from Table 6
3	Input 3 Tone Select Default = School Bell (Tone 07)	Use Dials 10's and 100's to select tone from Table 6
4	Input 4 (Evacuate Switch) Tone Select	Use Dials 10's and 100's to select tone from Table 6
5	Input 3 Mode School Bell Mode Ring Time	Dial 10 selects the duration of the School Bell tone: 0 = 0.5 sec; 1-9 = 1-9 seconds

Table 7-2: Input Selection

7.3.1 Indication of Input 3 operating mode

In Engineering Mode, the Defect LED (yellow) will continuously flash twice then be off for a short time.
The operating mode for input 3 is indicated on the Fault LED when in Engineering Mode as shown below:

Position of Long Flash	Input 3 Operating Mode
First Position	Bell Override Mode **ON**
Second Position	Class Change Mode **ON**

7.3.2 Amplifier Disable Mode — Input 3:

With S1-3 CONFIG 3 set to on, activating LED base address +2 will isolate the amplifier from Automatic RS485 Panel Activations. However Manual Activations will still trigger the amplifier.

Activating manual Input 3 will isolate the amplifier for both Automatic and Manual activations.

Automatic and Manual isolations result in a non-latching fault being signaled via the bell circuit (clamped to 4kΩ) and via RS485.

The amplifier isolation is signaled by the fault decode LED having the 9th flash long.

Class change mode is disabled when S1-3 CONFIG 3 set to on.

8 AMPLIFIER FIRMWARE UPGRADE:

The 50W Amplifier uses an AVR processor, which can be field upgraded should the firmware need to be changed to allow for use of a customised tone. An upgrade may be performed using a FISP Programmer.

8.1 FISP Programmer

Each Pertronic product containing an AVR microprocessor requires a separate FISP Project file be loaded. This sets up the correct AVR device type together with the Firmware filename and AVR Fuse bit settings. NOTE: The correct project file must be used; otherwise, the Pertronic device may be rendered unusable. A full suite of Project files together with firmware binaries are available on the Pertronic website:

www.pertronic.com.au

A password is required to log into the secure section of the website—this is available from the Pertronic office in Melbourne, Sydney, Brisbane, and Adelaide.

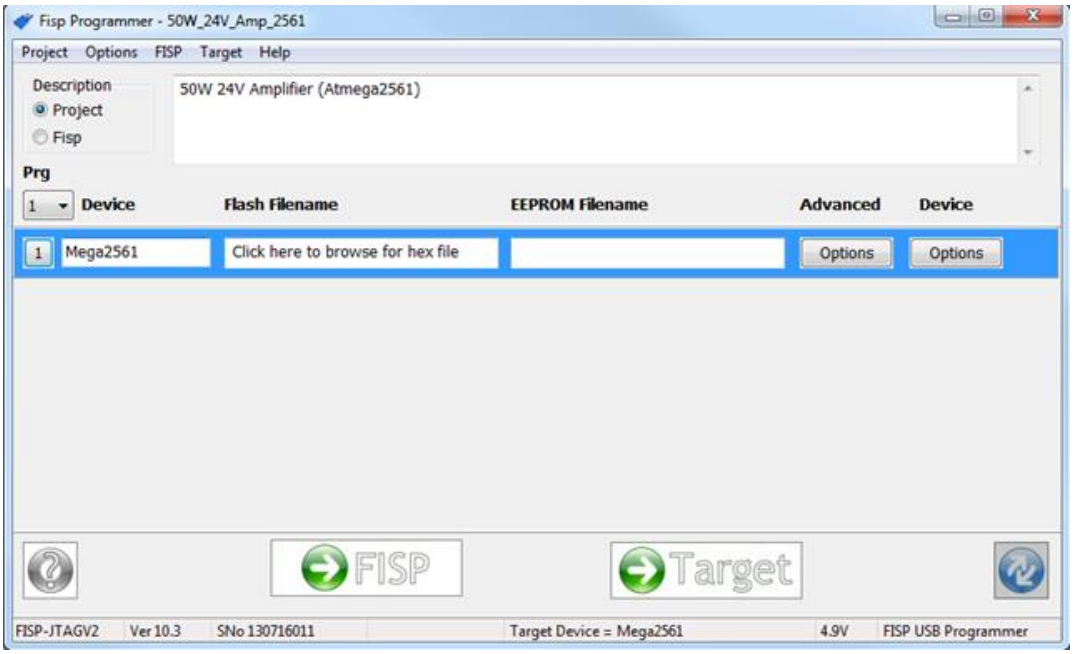

Figure 8.1: FISP Programmer Window for Programming a Pertronic AVR Device

To Load a Project:

1. Click on Project->Open Project Menu—this opens a file selection dialog.
2. Navigate to the folder containing the 'Project' file, for example, the Installation CD Project directory.
3. Load the relevant Project for the Pertronic product to be programmed. To change the firmware file to load, click in the Flash Filename window, and select the required *product*.hex binary file. NOTE: the FISP supports only firmware with the ".hex" format. The ".srec" format supported by AVR cannot be used.

Once the Programmer has been configured, the Pertronic Device is ready to be programmed. This can be done either with the programmer still connected to the PC or with the programmer unplugged and used in stand-alone mode.

To Program the Pertronic Device with the PC connected:

1. Plug the FISP Programmer 10-way IDC lead into the Flash Programmer socket on the target PCB—the Target button illuminates on the FISP Programmer software.
2. Click on the 'Target' button, and wait until the programming and verification is complete.

To Program the Pertronic Device in Stand-Alone mode:

1. Unplug the FISP Programmer from the PC, and plug the Programmer 10-way IDC lead into the Flash Programmer connector on the target PCB.
2. The LED on the FISP Programmer flashes orange when programming is underway, and it turns green when the programme has downloaded successfully. It flashes yellow if programming fails.

USB Flash In-System Programmer (FISP) Part Number **:** FISP-AVR

9 SPEAKER LOADING – AMPLIFIER DC CURRENT

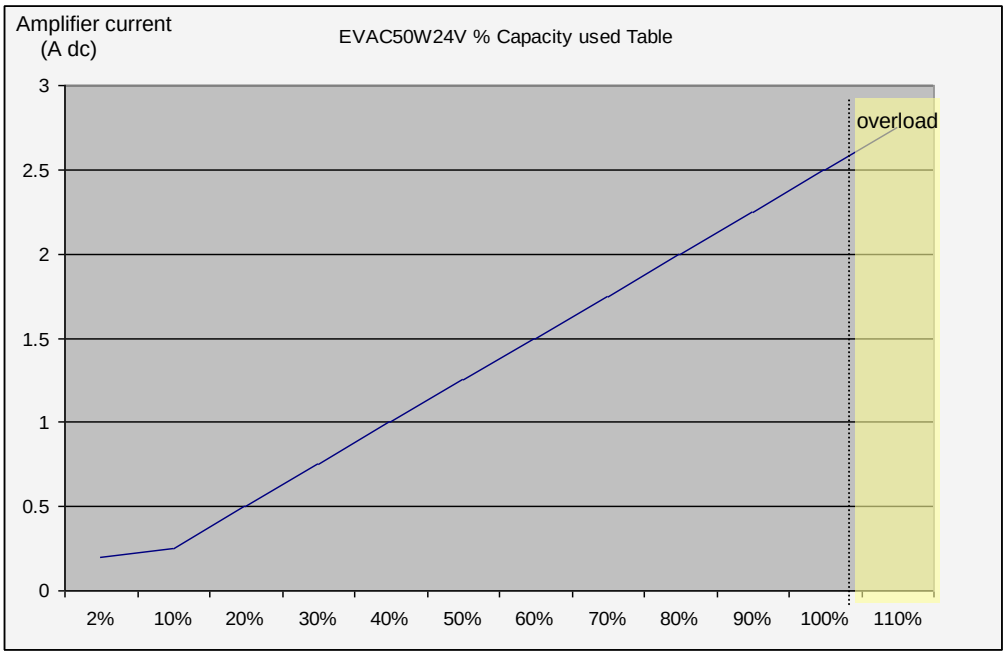

Figure: 9.1: Amplifier Speaker Load (%)

The graph is indicative of the Amplifier DC supply current (based on an average supply voltage of 27Vdc) with respect to the approximate Amplifier output capacity loading using a steady tone (e.g. Tone 22).

Load capacity check

Checking the actual load on the amplifier is important as the power tapping indications on speakers may not accurately reflect the load they place on the amplifier.
The table below provides the measurements for the above graph.
The only equipment required is a multi meter. As the power load from the speakers increases, so too does the DC current drawn from the amplifier's power supply. If Tone 22 is selected on the amplifier, then at full load the amplifier will draw about 2.5A @ 27Vdc. The test procedure for amplifier load testing is as follows:

a. Ensure only one amplifier is connected to the DC supply.
b. Insert the multi meter, set to amps, in series with the negative supply lead and DC supply connector.
c. Set the Amplifier to test mode (see section 7.3 Engineering mode) set for Tone 22.
d. While Tone 22 is ON measure the DC voltage and current drawn - compare readings against the table or the graph to identify the loading on the amplifier
e. When testing is complete set the dials to '0' '0' '0' then set switches S2-1 WR and S2-2 ENG to off before setting the dials to the original setting!
f. Ensure the amplifier tones are programmed as previously set

Current Drawn (use Amplifier Tone 22)	Supply Voltage	Amplifier Load (Capacity Used)	Comment
0.2A	27Vdc	2%	10k_ EOL only (no speakers)
0.25A	27Vdc	10%	Low Load
0.5A	27Vdc	20%	
0.75A	27Vdc	30%	
1.0A	27Vdc	40%	
1.25A	27Vdc	50%	Half Load
1.5A	27Vdc	60%	
1.75A	27Vdc	70%	
2.0A	27Vdc	80%	
2.25A	27Vdc	90%	
2.5A	27Vdc	100%	Full Load
2.75A	27Vdc	110%	Overload
2.83A	27Vdc	113%	Overload

Table: 9-1: Approximate amplifier current vs. output load

PRODUCT CODES:

Description	Product Code
24V, 50W Amplifier with Standard Tones	EVAC50W24V-A
24V, 50W Amplifier with Custom Tones	EVACCUSTSW
Pre-Amp (Mic I/P) for EVAC50W24V Amplifier	EVAC50PREA
External Microphone Signal Boost Pre-Amplifier	PREAMP-RB

Table 0-1: Product Codes

Document Change History

Issue No	Reason for Update	Description of Changes	Author
1.0	Initial formal release		GeoffT
1.1	Mic Pre-Amp update	Section 2.2 and 4.1: amend detail for Access Points and Pre-Amp connectors	GeoffT
1.2	Remote Pre-Amp update	Fig 4.2: Remote Pre-Amp	GeoffT
1.3	Mode select with links	Sections 3, 5.4, 7.3.1, Tables 4.3 & 7.2, minor corrections and PCB drawing updates	PeterF SimonE
1.4	CN1149	Added section 7.3.2 amplifier isolation: Updated Table 7.1	Peter F Simon E
1.5	CN1199	Added LCD Addressing mode and tone 47. Divorced Class Change from Warn Sys Isolate NOT RELEASED	Simon E
1.6	CN1199	Further changes and corrections; Speaker Loading chapter 9 added	DerekW
1.7	CN1420	Changes to Automatic (RS485) and Manual (direct input) operation. Tones 46 & 47 added to table 7.1	Simon E
1.8	Fig 2.1 incorrect	Updated Fig 2.1	RDB
1.9	Missing info (BZ 3937)	Added section 7.3.1 Index now includes level 3 headings	RDB
2.0	CN2022	Revised for SMD Conversion	Sunny S
2.1	CN2306	Update of PREAMP-RB information for A2055A model	JPF
3.0 Draft	CN2506	Revised SMD implementation	JPF
4.0	CN2506	New output drive, links now DIP switches	JPF
4.1	CN2910	Updated tables 3.1, 3.2	RJK
4.2	CN3414	Update advice on clearing latched defect indication, title page, sales and technical page	RJK

PERTRONIC SALES AND TECHNICAL SUPPORT

New Zealand

Pertronic Industries Limited

Head Office
17 Eastern Hutt Road
Wingate
Lower Hutt
Phone +64 4 5673229
Fax +64 4 5673644
sales@pertronic.co.nz

Auckland
3 Gloucester Park Road
Onehunga
Auckland 1061
Phone +64 9 633 0226
Fax +64 9 633 0228

New Zealand Website
www.pertronic.co.nz

Australia

Pertronic Industries Pty Limited

Melbourne
Unit B2
2A Westall Rd
Springvale
VIC 3171
Phone +61 3 9562 7577
sales.vic@pertronic.com.au

Sydney
Unit 9
38 South Stree
Rydalmere
NSW 2116
Phone +61 2 9638 7655
sales.nsw@pertronic.com.au

Brisbane
Unit 3
43-49 Sandgate Rd
Albion
QLD 4010
Phone +61 7 3255 2222
sales.qld@pertronic.com.au

Adelaide
65 Manton Street
Hindmarsh
SA 5007
Phone +61 8 8340 9533
sales.sa@pertronic.com.au

Perth
3/71 Beringarra Ave
Malaga
WA 6090
Phone +61 8 6555 3008
sales.wa@pertronic.com.au

Australian website
www.pertronic.com.au

USA

Pertronic Industries Inc

Phoenix
Scottsdale
Arizona 85258
Phone +1 480 452 8330
Keith.Bowler@pertronic.com

Guilford
Connecticut 06437
Phone +1 203 598 1133
Raymond.Krickmier@pertronic.com

USA website
www.pertronic.com