PERTRONIC
4-Way
Audio Distribution Module
ADM-4
TECHNICAL MANUAL

Valid For:

PCB Hardware: v0.31 and greater

PCB Firmware: v1.0 and greater

Issue 1.4

The content of this manual is copyright.

This document is to be used only for operating or maintaining Pertronic Fire Alarm systems.

This document is not to be reproduced, photocopied or passed in part or whole to a third party without the express, written authorization of

Pertronic Industries Pty Limited

Acronyms:

EOL	End of Line
LED	Light Emitting Diode
O/C	Open-circuit
PCB	Printed Circuit Board
S/C	Short-Circuit

CONTENTS

1.0	INTRODUCTION	1
2.0	SPECIFICATIONS	2
2.1.	PCB Layout	3
2.2.	Access Points	3
3.0	SYSTEM FEATURES	5
3.1.	Features	5
3.2.	Indicators	6
4.0	INSTALLATION	7
4.1.	Power Supply	7
4.2.	Control Inputs	7
4.3.	100 V Line Output	8
4.4.	Audio Line Monitoring	8
4.5.	Channel Isolation	9
4.6.	Basic Connection - 4 Monitored Channels	9
4.7	Multiple Audio Distribution Modules	9
4.8.	Downstream Sub-Channel Activation	11
4.9.	Interfacing to the EA60 Amplifier	12
5.0	FAULTS	14
5.1.	Faults	14
5.2.	Historic Faults	14
5.3.	Fault Relay Output	14
5.4.	Polyfuse	14
6.0	PRODUCT CODES	15
7.0	PERTRONIC CABLE	16
PERTRONIC SALES AND TECHNICAL SUPPORT		17

FIGURES

Figure 1-1: Audio Distribution Module 4-Way 1

Figure 2-1: PCB Layout 3

Figure 4-1: Relay Contact 7

Figure 4-2: Open Collector or Open Drain Using Local 5 V 8

Figure 4-3: Using Isolated Supply 8

Figure 4-4: Basic Connection – 4 Monitored Channels 9

Figure 4-5: Multiple Audio Distribution Modules 10

Figure 4-6: Downstream Sub-Channel Activation 11

Figure 4-7: EA60, ADM-4 and Panel Connection Diagram 12

Figure 4-8: ADM-4 EA60 Interconnection and DIP Switch Settings 13

TABLES

Table 2.1: Access Points 4

Table 6.1: Product Codes 15

1.0 INTRODUCTION

The Pertronic Audio Distribution Module 4-Way (ADM-4) provides multiple independently controlled and monitored 100 VRMS audio lines (channels). This simplifies audio system installations by allowing multiple spurs from a single 100 Volt audio line without compromising the fault supervision system.

A system built with ADM-4 modules will continue operating even if some channels develop faults. If any channel becomes short circuited, the shorted channel will be disconnected, but the output continues on the unaffected channels after a brief interruption (about 20 seconds). The module continues to monitor any shorted channel, and it will automatically reconnect the channel if the fault is cleared.

The built-in supervision system continually monitors the 100 V output lines for open-circuit or short-circuit conditions, irrespective of whether the system is broadcasting an evacuation message, broadcasting non-urgent audio such as background music, or idling with no signal.

Each channel may be permanently enabled using the local DIP switch or enabled/disabled by a remote control signal.

The Audio Distribution Module independently supervises the output channels and signals a fault condition to the amplifier or evacuation generator in the event of a fault condition. The module also includes a form C clean contact fault relay for connection to monitoring equipment.

The ADM-4 is compatible with the EA60 and EA120 AS 4428.16 Grade 3 amplifiers. For compliant use with these amplifiers, the ADM-4's outputs should be directed to a single zone. The ADM-4 assists compliance with the fault isolation requirements in AS 1670.1:2024, 2.6 and AS 4428.16:2020, 15.5.2.

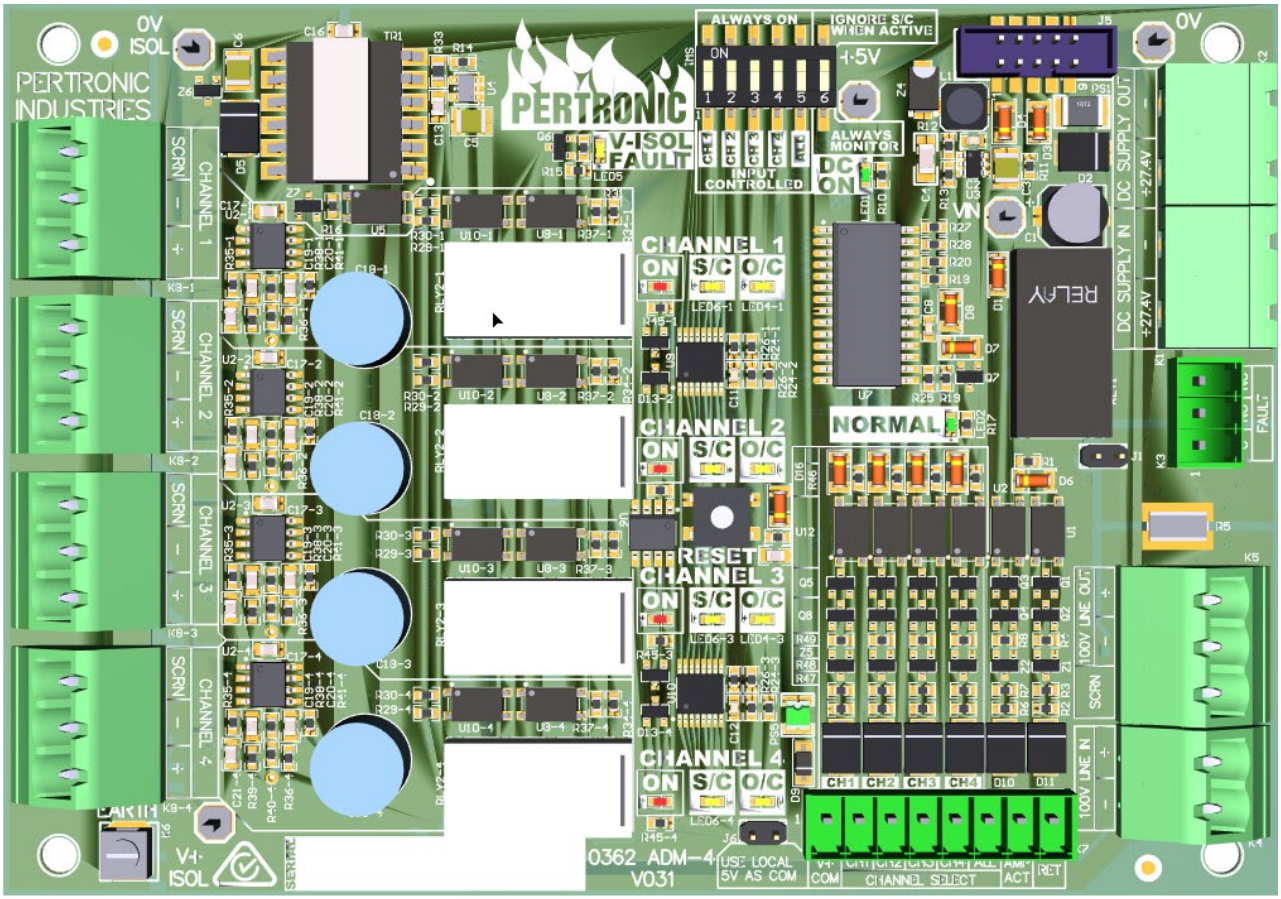

Figure 1-1: Audio Distribution Module 4-Way

2.0 SPECIFICATIONS

Circuit Board:		
Dimensions	138 x 98 x 27	L x W x D (mm)
Mounting holes	127.5 x 89	L x W (mm)
Mounting Space	160 x 100	
Electrical:		
Operating voltage	18 Vdc – 30 Vdc	nominal 24 Vdc
Quiescent current	DC: 16 mA @ 27.4 Vdc	
Maximum fault current	DC: 25 mA @ 27.4 Vdc	
Protection	Reverse Polarity Protected	
100V Line Input:		
Maximum Voltage	100 Vrms	
Fault condition	6.8 kΩ placed across line	(if jumper selected)
Power per channel	80 W (100 Vrms Line)	
Total power (4 channels):	250 W	
Monitoring (Output):	Fully monitored for open-circuit or short-circuit fault conditions (47 kΩ, 0.5 W EOL resistor)	
Recovery Time:	20 seconds (approx.) to resume transmission after detecting a short-circuit on any channel	
Fault Output:		
Relay rating:	2 A @ 30 Vdc Clean Contact	
Control Inputs:		
External Drive Voltage:	5 Vdc – 30 Vdc	
Current per input:	5 mA – 8 mA	
Operating Environment:	0˚C to 45˚C, ≤ 95% RH (non-condensing)	

2.1. PCB Layout

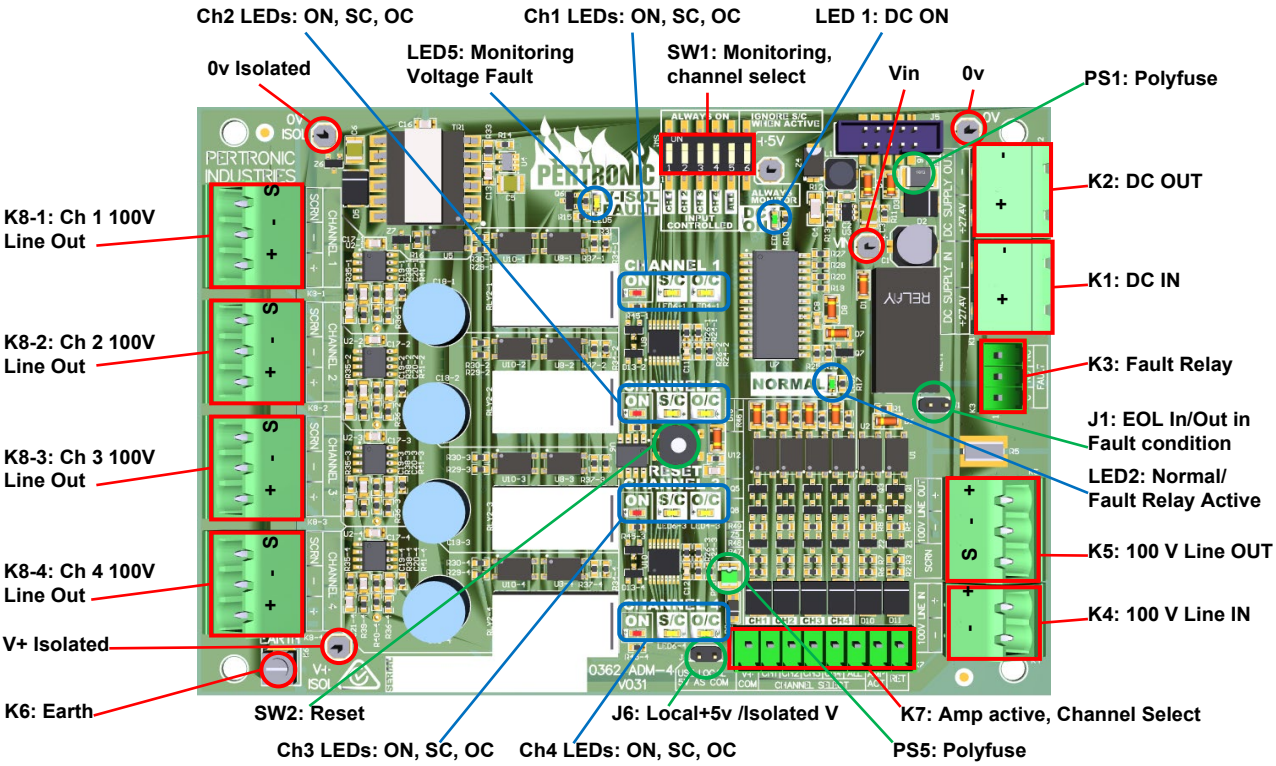

Figure 2-1: PCB Layout

2.2. Access Points

Connectors	
Component	**Description**
K1	DC In
K2	DC Out
K3	Fault Relay
K4	100 V Line In
K5	100 V Line Out
K6	Earth Connection
K7	Amp Active, Channel Select
K8-1	Channel 1 100 V Line Out
K8-2	Channel 2 100 V Line Out
K8-3	Channel 3 100 V Line Out
K8-4	Channel 4 100 V Line Out

LEDs		
Component	**Description**	**Colour**
LED 1	DC On	Green
LED 2	Normal / Fault Relay Active	Green
LED 5	Isolating Voltage Fault	Yellow
LED 4-1	Channel 1 Open Circuit Fault	Yellow
LED 6-1	Channel 1 Short Circuit Fault	Yellow
LED 7-1	Channel 1 ON indication	Red
LED 4-2	Channel 2 Open Circuit Fault	Yellow
LED 6-2	Channel 2 Short Circuit Fault	Yellow
LED 7-2	Channel 2 ON indication	Red
LED 4-3	Channel 3 Open Circuit Fault	Yellow
LED 6-3	Channel 3 Short Circuit Fault	Yellow
LED 7-3	Channel 3 ON indication	Red
LED 4-4	Channel 4 Open Circuit Fault	Yellow
LED 6-4	Channel 4 Short Circuit Fault	Yellow
LED 7-4	Channel 4 ON indication	Red

Jumpers		
Component	**Not Fitted**	**Fitted**
J1	No EOL Across Line In (K4) Fault Condition	6.8 kΩ EOL Across Line (K4) In Fault Condition
J6	Inputs Use Isolated V	Use Local 5 V

Switches	
Component	**Description**
SW1	Monitoring, Channel Select
SW2	Reset

Table 2.1: Access Points

3.0 SYSTEM FEATURES

3.1. Features

Channel Select: Channels can be individually turned ON by activating their Channel Select input. Alternatively, channels can be turned ON permanently using the on-board DIP switch.

All Call: The All Call input and DIP switch turn ON all channels at once (irrespective of individual Channel Select states).

Short Isolation: If a short circuit is detected on an active channel, the shorted channel will be isolated as follows:

> The amplifier will cease operation on all channels. After a brief delay of approximately 20 seconds, the affected channel(s) will turn OFF and the unaffected channels will return to normal operation.
>
> The shorted channel(s) will turn back ON (if set to do so) if the short circuit condition is cleared.

Short-circuit detection is temporarily disabled when the Amp-Active feature is utilised (see below).

Fault Indication: Each channel has an independent O/C LED and S/C LED. If a fault exists, the corresponding LED will turn ON. Once the fault has been remedied, the same LED will blink to indicate a historic fault. Pressing the RESET switch will remove all historic fault indications.

Fault Relay: The fault relay (and NORMAL LED) is energised when no faults currently exist. If any fault exists, then the fault relay is de-energised.

Fault Signal: If any fault exists, a 6.8 kΩ resistance is applied across the 100 V Line-In to generate a fault condition on the connected Amplifier / EVAC Gen Module. This can be disabled by removing the associated jumper.

Amp-Active: If this control input is activated a low EOL resistance (including a hard short-circuit) resulting from modules connected down-stream on an ADM-4 output will not generate a S/C fault condition. The Amp-Active feature is enabled by setting the DIP switch to 'Ignore S/C when active', see 4.2.1 below.

Any channel(s) with pre-existing short circuit conditions will remain isolated while this control is active.

Channel ON: The Red Channel ON indicator will be ON whenever the channel is switched on (either by remote signal or DIP switch), unless it has been isolated due to a short-circuit fault.

Earth Screen: The SCRN pin of each channel 100 V Line Output is directly connected to earth potential. These connections allow the use of screened audio cable.

DC Supply Out: The DC Supply In is directly connected to DC Supply Out. This provides a convenient supply connection for multiple Pertronic products.

100 V Line Out: A 100 V Line Out connection allows the 100 V Line signal to be connected to additional ADM-4 modules or "always connected" speakers. A suitable EOL resistor (usually 10 kΩ) is required at the end of the line to satisfy the amplifier's monitoring circuit.

Control Inputs: All control inputs are active-low and can be activated using either a clean contact relay to RET or from an open collector output. If the ADM-4 and fire Alarm Panel share the same supply, no connection is necessary between RET and the panel supply 0 V.

3.2. Indicators

DC ON LED	Green	Turns ON when power is supplied to the Audio Distribution Module
Normal LED	Green	Normally ON, turns OFF when there is a fault
V-Isol Fault LED	Yellow	Turns ON when the on board isolated power supply voltage has failed.
CHx ON LED	Red	Turns ON when channel x is ON
CHx O/C LED	Yellow	Turns ON when there is an O/C fault on channel x
		Flashes to indicate a historic O/C fault on channel x
CHx S/C LED	Yellow	Turns ON when there is a S/C fault on channel x
		Flashes to indicate a historic S/C fault on channel x

4.0 INSTALLATION

4.1. Power Supply

The Audio Distribution Module 4-Way connects to the power supply via the 'DC SUPPLY IN' connector located at the top right of the board. The 'DC SUPPLY OUT' connector may be used to supply power to additional devices. The DC supply must be connected at all times to enable the Audio Distribution Module to monitor the 100 V line channel outputs.

A green “DC ON” indicator is always ON when power is available.

4.2. Control Inputs

The four output channels can be activated independently using the Channel Select inputs or can be permanently turned ON by selecting the corresponding DIP switch.

4.2.1. DIP Switch- Always ON settings

Turn on the required channels permanently by selecting the appropriate DIP switch.

If the ALL switch is selected, switches 1-4 are overridden and all channels will be ON.

The example shown has Channels 2 and 4 ON and Channels 1 and 3 input controlled

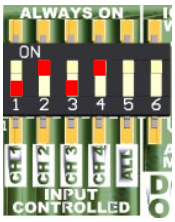

.

4.2.2. Activating Control Inputs

The Audio Distribution Module 4-Way has 6 constant-current inputs that can operate at the local potential or from a floating / isolated DC supply.

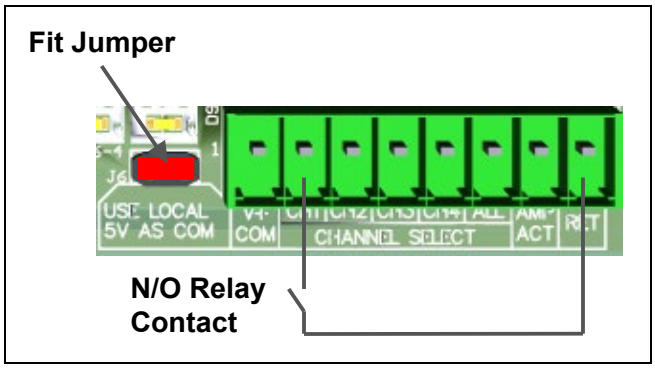

Figure 4-1: Relay Contact

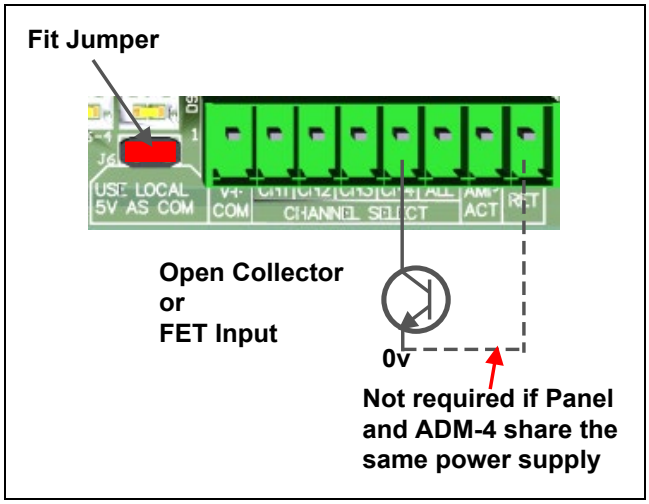

Figure 4-2: Open Collector or Open Drain Using Local 5 V Supply (Common 0V Required)

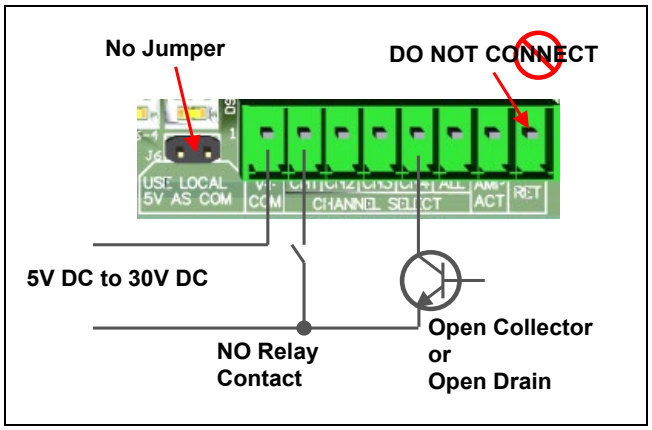

Figure 4-3: Using Isolated Supply

4.3. 100 V Line Output

The 100 Volt line outputs are supplied with a small DC bias voltage for the monitoring system (see below).

Speakers used with the Audio Distribution Module must be rated to 100 Vrms, and they must be fitted with a series capacitor to block the DC bias voltage. The capacitor must be bipolar and able to withstand 200 Volts (peak). The value should be approximately 1 µF per watt of power for each speaker.

A common problem of 100 V line speaker installations is the coupling of unwanted noise into the 100 V line. Although the Audio Distribution Module has been designed to reduce the effects of coupled noise, it is recommended practice that all 100 V line wiring be separated from ALL OTHER wiring by at least 250 mm. This includes Mains wiring, ELV wiring, Loop wiring and telephone wiring.

Recommended Pertronic 100V speaker cable products are listed in Section 7.0.

4.4. Audio Line Monitoring

The audio output lines are monitored using a small DC bias voltage to check for the presence of the EOL resistor. The monitoring is always active. It can detect short-circuit and open circuit faults on the 100 V line. The 100 V line outputs must not be spurred. Each line must be terminated with a 47 kΩ, 0.5 W EOL resistor.

The DC bias voltage is floating with respect to ground and is DC-isolated from the '100 V Line In +' input. This allows a DC monitoring voltage to also be used on the input side of the ADM-4 (i.e. from the amplifier, monitoring the connection to the ADM-4) without the two monitoring systems interfering with one another.

4.5. Channel Isolation

Channels are individually turned OFF by opening a relay contact on the 100 V Line '+' rail only. The red 'ON' LED on each channel is an indication of whether this relay contact is open or closed, regardless of the channel selection settings.

4.6. Basic Connection - 4 Monitored Channels

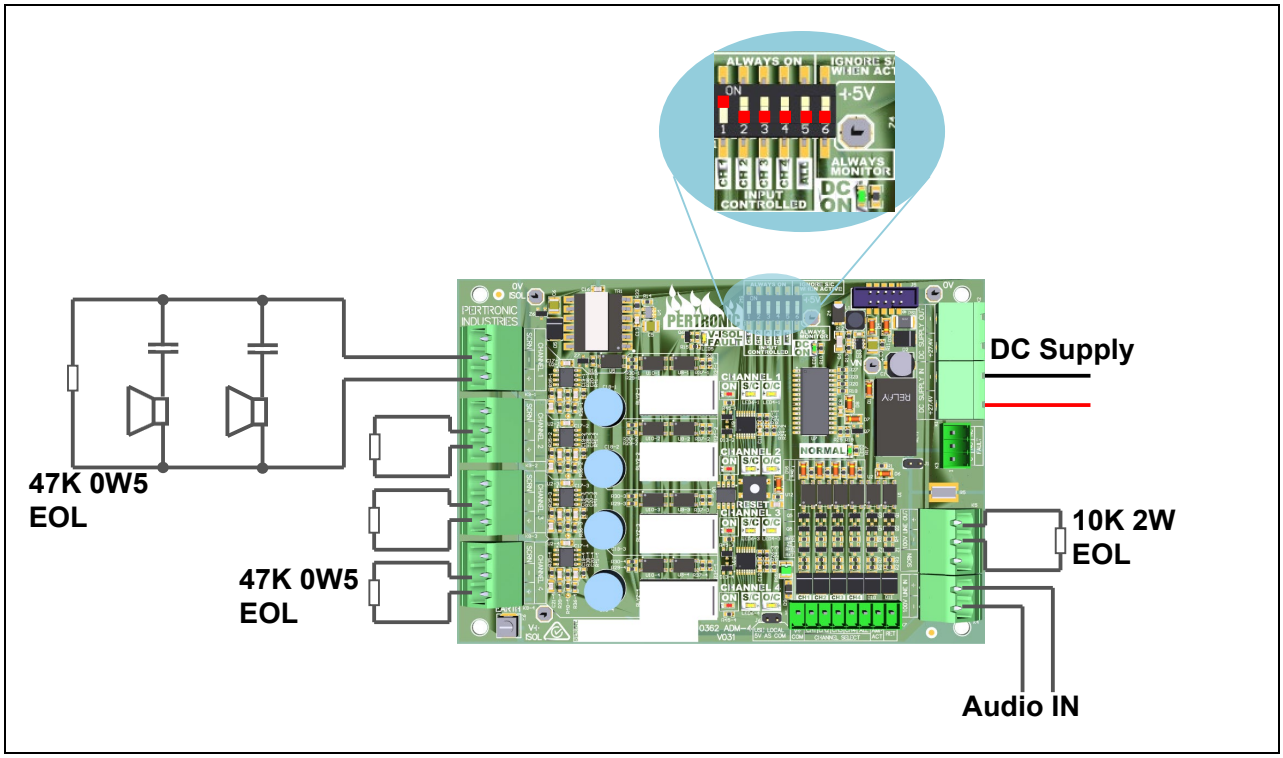

Figure 4-4: Basic Connection – 4 Monitored Channels

4.7 Multiple Audio Distribution Modules

If more than four audio channels are required, then multiple ADM-4 can be connected together.

The diagram below shows two modules connected to an amplifier.

An appropriate EOL resistor must be fitted to the 100 V line on the last module. The value should be chosen to suit the audio source; in this example the EOL is a 10K 2W resistor.

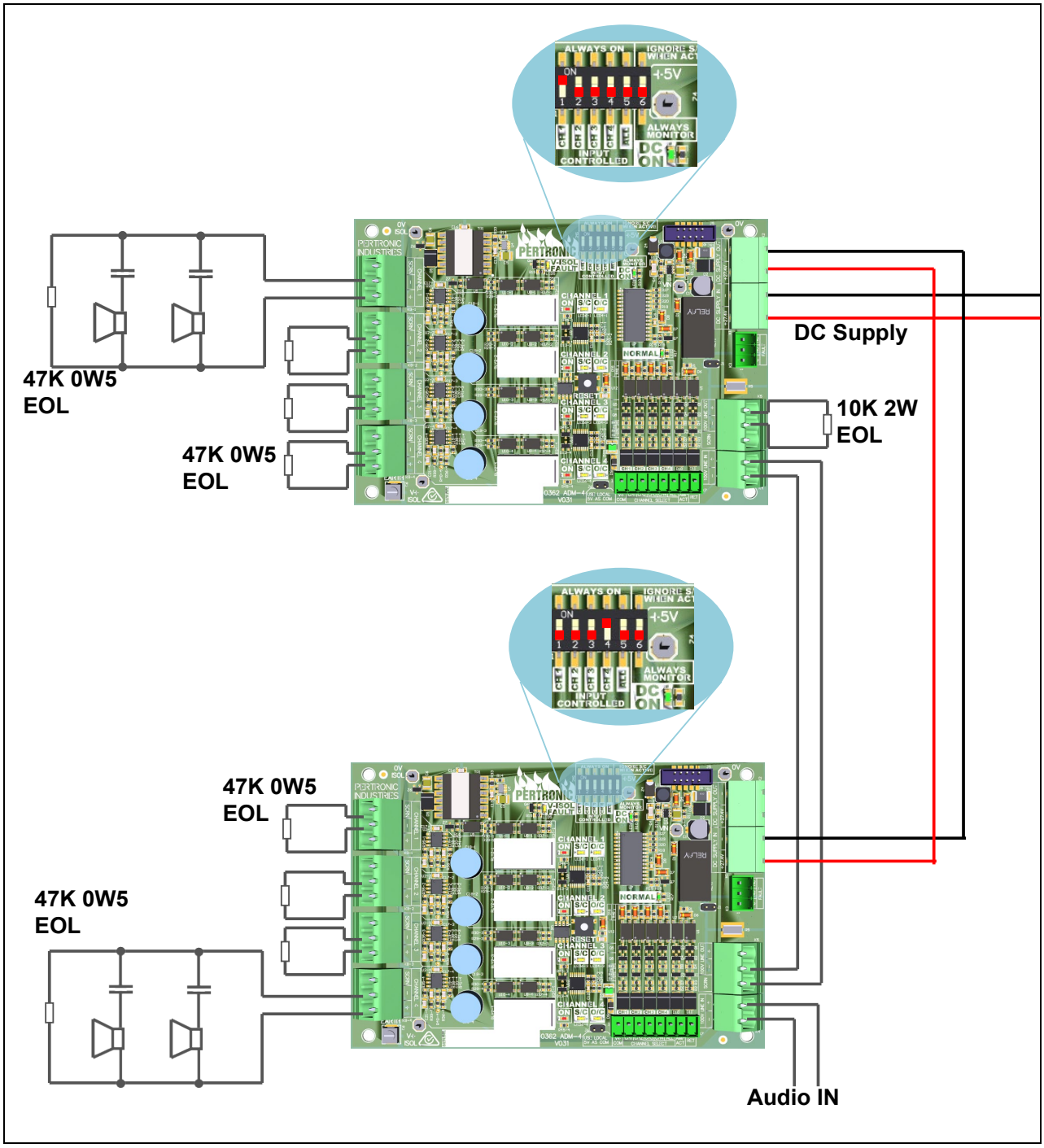

Figure 4-5: Multiple Audio Distribution Modules

4.8. Downstream Sub-Channel Activation

Sub-channels can be connected to any of the four output channels of the ADM-4 module.

A typical application using System Sensor M500S modules activated by an analogue addressable panel is shown in Figure 4-6 below.

Monitoring of the sub-channel speaker circuits is performed by the M500S module.

4.8.1. Audio Active Input (AMP ACT)

When sub-channels are operated, such as an Apartment Module (e.g. AM3) via a Supervised Control Module (e.g. M500S), their EOL resistance appears in parallel with the associated ADM-4 channel EOL. The resulting combination will appear as a low resistance which can cause the ADM-4 to generate a 'Defect'/'Fault'. The ADM-4 must, therefore, be configured to ignore this condition during activation.

To do this, connect the 'AMP ACT' to the EVAC Generator Module ('Amp Active Out pins 4 (C) and 5 (NO)) or the EA60W amplifier ('Audio Active Output, pin 2 of connector K19) and set the DIP switch "IGNORE S/S WHEN ACTIVE" to ON.

NOTE: *Ensure DIP switch "**IGNORE S/S WHEN ACTIVE**" is **ON** and "**AMP ACT**" input is connected*

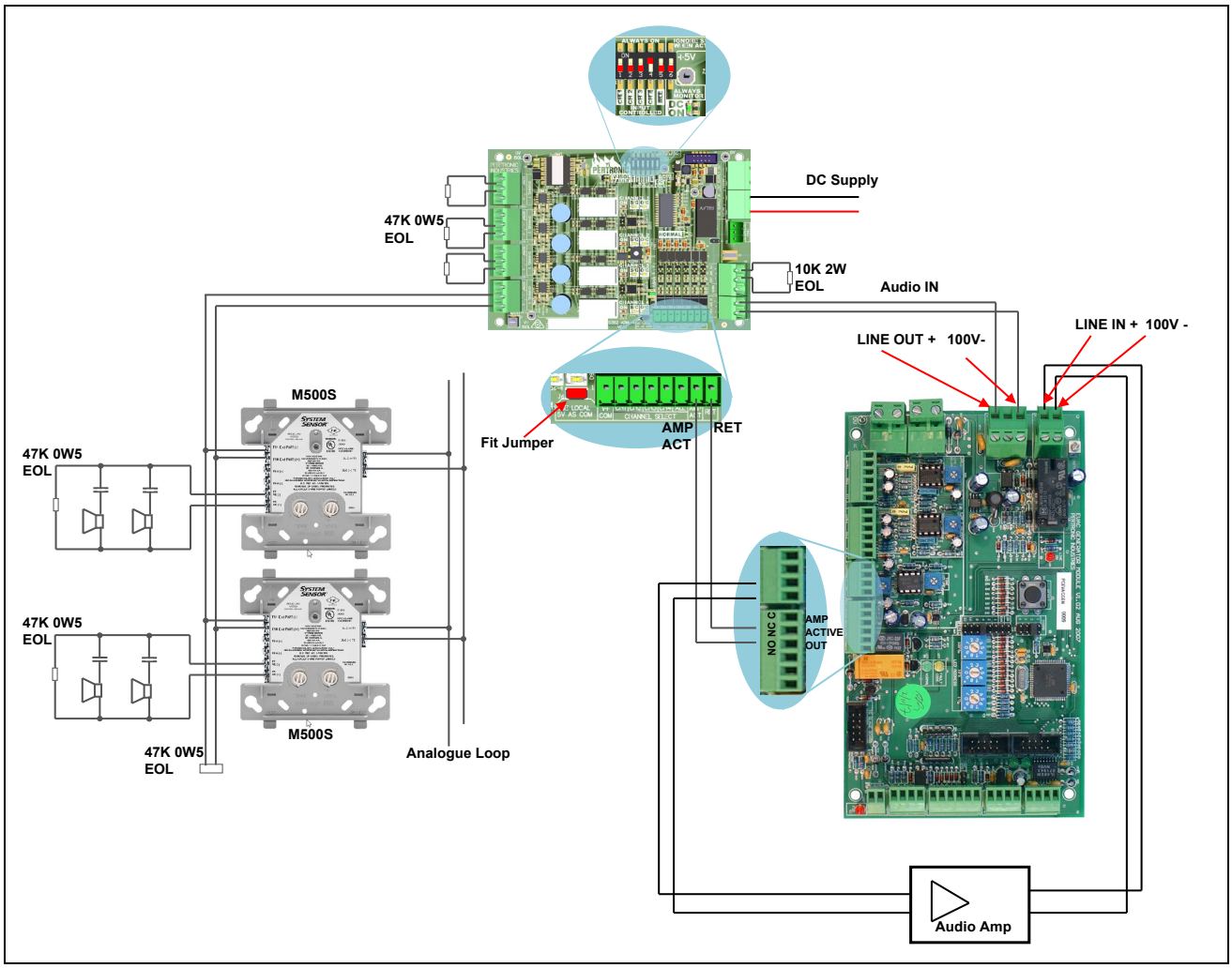

Figure 4-6: Downstream Sub-Channel Activation

4.9. Interfacing to the EA60 Amplifier

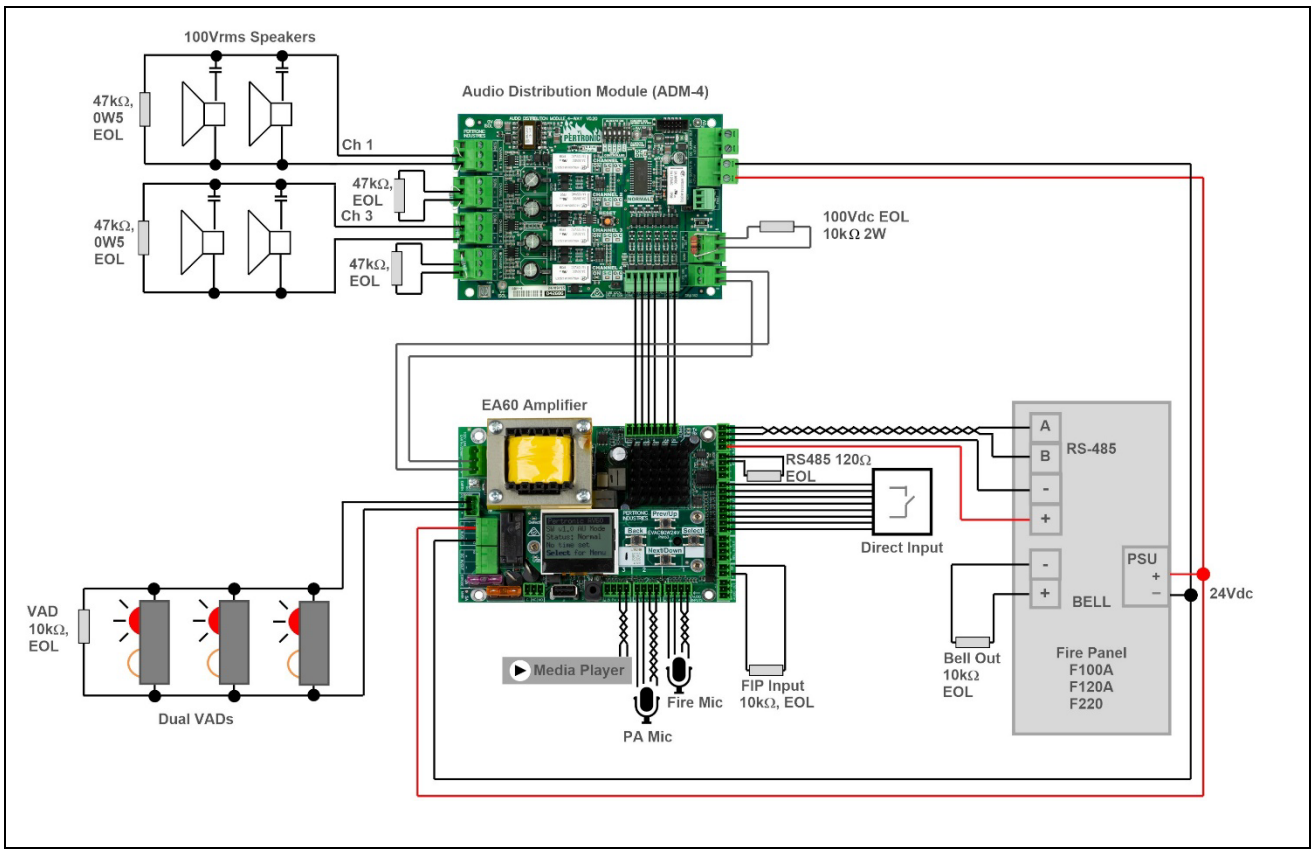

Figure 4-7: EA60, ADM-4 and Panel Connection Diagram

Setting up the ADM-4

1. Wire 6 inputs of K7 connector on the ADM-4 to the K19 ‘ADM-4’ connector on the EA60 Amplifier as shown below. This is a straight through interconnect; ‘V+’ and ‘All’ are not connected.

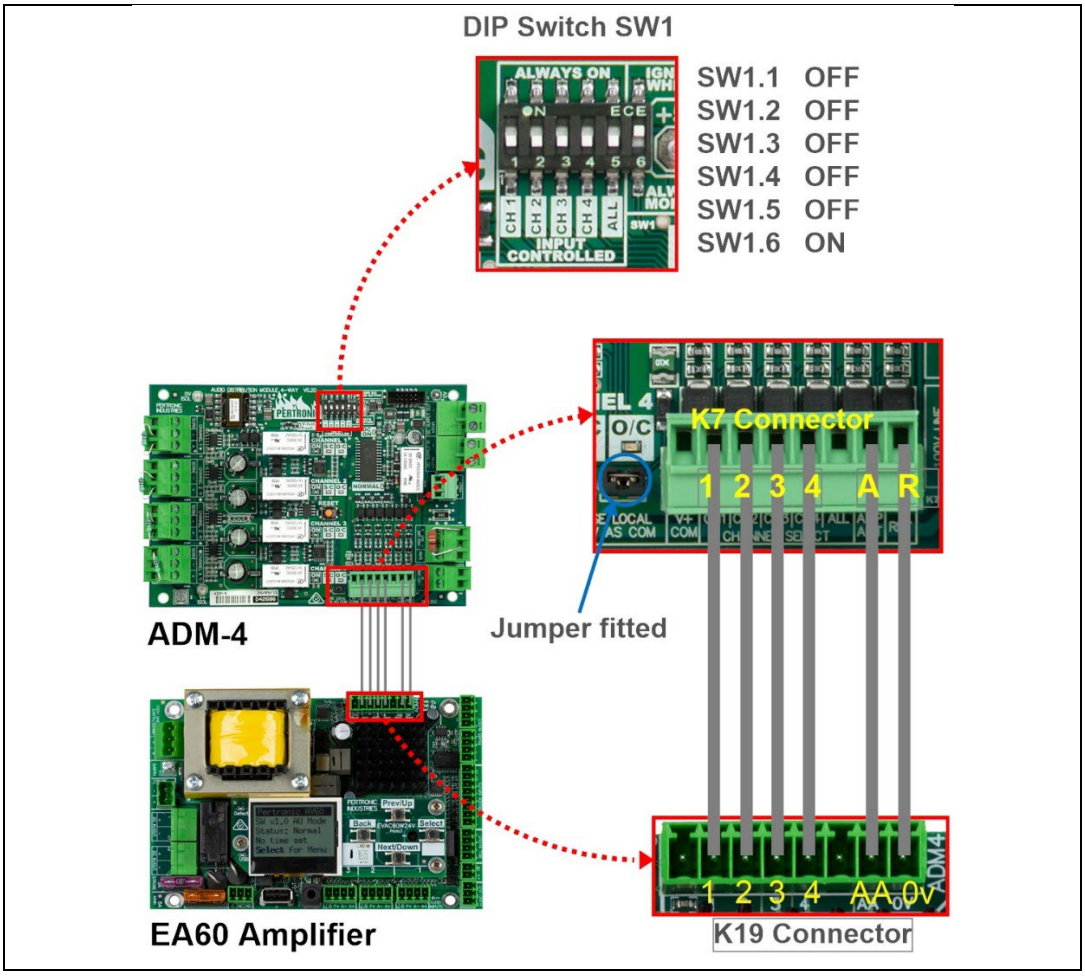

Figure 4-8: ADM-4 EA60 Interconnection and DIP Switch Settings

2. Switch SW1 (Channel select and monitoring)
   - SW1.1 through to SW1.5 are OFF.
     Ch1 and Ch2 will be turned on by the software.
   - Switch SW1.6, 'Ignore S/C When Active' switch should be ON.
     This setting allows the ADM-4 to drive modules that switch resistors across the ADM-4 outputs, such as the Apartment Module (AM3) or the Supervised Control Module (M500S), without the ADM-4 going into 'Defect/'Fault'.

3. Jumper J6 (Isolated/Local 5V).
   A jumper should be fitted to provide +5.0V to each channel of the EA60's open collector output.

4. When configuring the amplifier via the Menu system, set 'Global Fire Mic' to On.
   (Main > Program Menu > Global Settings > Global Fire Mic).

5.0 FAULTS

Each channel has indicators for open circuit and short circuit fault conditions.

5.1. Faults

If a fault is present, then the corresponding LED will be **ON** and the common fault relay in the “released” state. The fault relay connects a 6.8 kΩ resistor across the 100 V Line-IN connection (via jumper J1) to signal the fault condition to the associated amplifier or tone generator.

5.2. Historic Faults

If any faults have been present and subsequently cleared, then the associated LED will **FLASH** to indicate an historic fault event.

Historic indications are cleared by briefly pressing the reset switch.

5.3. Fault Relay Output

A set of change-over contacts are also available for connection to equipment common fault indication.

NOTE: *If fault indications are not also required via the 100 V line connection, then this function can be disabled by removing jumper J1.*

Remove Jumper

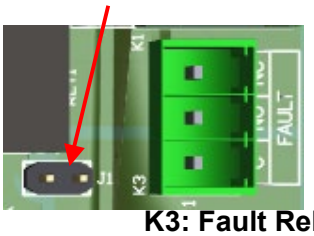

K3: Fault Relay

5.4. Polyfuse

The Isolated/Local 5V supply that is provided via Jumper 6 to optionally pull-up the ADM-4 channel selects is protected by a 100mA polyfuse, PS5. In the event of this polyfuse operating, the 5V supply will become unavailable for short period until the fault is removed and the polyfuse has auto-reset. The short-circuit fault that caused the polyfuse to open should be identified and removed (See Figure 2-1)

The DC SUPPLY input is protected by a 500mA polyfuse, PS1. If this polyfuse operates, LED1 (‘DC ON’) will extinguish (along with all other indicators on the ADM-4). In the event of this polyfuse operating, the ADM-4 will not function until the fault is identified and removed, and the polyfuse has auto-reset (See Figure 2-1). If the ‘DC SUPPLY’ is interrupted, then the ADM-4 common fault relay will be released and will notify the upstream amplifier of the fault, and any external equipment connected to the Fault Relay Output.

6.0 PRODUCT CODES

Description	Product Code
Audio Distribution Module 4-Way	ADM-4

Table 6.1: Product Codes

7.0 PERTRONIC CABLE

Order Code	Description	Typical System Application
F100ZZCBL	1.25 mm² Twisted Pair Cable (2 core, 200 m drum)	Used for AA loops and Network connections
F100ZZCBLF	1.5 mm² Twisted Pair Fire Rated Cable (2 core, 250 m drum)	Used for AA loops and Network connections where fire rating is required
EVACCBL	1.25 mm² Grey Twisted Pair Evac Amp Cable (2 core, 200 m drum)	Used for amplifier 100V lines and connection to VADs
SGDCI	Mimic cable Internal 0.8 mm/0.8 mm (4 core, 250 m drum)	Used for RS485 interconnections

Document Change History

Issue No	Reason for Update	Description of Changes	Author
Issue 1.0	Initial Release	New Manual	CL, KC
Issue 1.2	Clarification on the use AMP ACT input and V Isolate LED	CN2872	RJK
Issue 1.3	Minor corrections, updated diagrams, reformatting, new section	CN3389	RJK
Issue 1.4	Updated specs, minor corrections PCB layout/access points Scattered minor updates for J1 jumper	~~CN3590~~ (cancelled) CN3959	RJK MQ

PERTRONIC SALES AND TECHNICAL SUPPORT

New Zealand - Pertronic Industries Limited

Head Office, Wellington
17 Eastern Hutt Road
Wingate
Lower Hutt
Phone +64 4 5673229
sales@pertronic.co.nz
tech@pertronic.co.nz

Christchurch
35 Buchanans Road,
Hei Hei
Christchurch 8042
Phone +64 3 599 9136
christchurch@pertronic.co.nz

Auckland
3 Gloucester Park Road
Onehunga
Auckland 1061
Phone +64 9 633 0226
auckland@pertronic.co.nz

New Zealand website
www.pertronic.co.nz

Australia - Pertronic Industries Pty Limited

Melbourne
Unit B2/2A Westall Rd
Springvale
VIC 3171
Phone +61 3 9562 7577
sales.vic@pertronic.com.au

Brisbane
Unit 3
43-49 Sandgate Rd
Albion
QLD 4010
Phone +61 7 3255 2222
sales.qld@pertronic.com.au

Perth
6/1 Burchell Way
Kewdale
WA 6105
Phone +61 8 6555 3008
sales.wa@pertronic.com.au

Sydney
Unit 9/38-46 South Street
Rydalmere
NSW 2116
Phone +61 2 9638 7655
sales.nsw@pertronic.com.au

Adelaide
65 Manton Street
Hindmarsh
SA 5007
Phone +61 8 8340 9533
sales.sa@pertronic.com.au

Australian website
www.pertronic.com.au

USA - Pertronic Industries Inc

Phoenix
Corporate Office
16597 N. 92nd Street
Suite 110, Scottsdale, AZ 85260
Phone +1 480 452 8330
Keith.Bowler@pertronic.com

Kentucky
Engineering, Product Development Office
Louisville, KY 40245
Phone (502) 216 5387
Doug.Woosley@pertronic.com

Guilford
Connecticut 06437
Phone +1 203 598 1133
Raymond.Krickmier@pertronic.com

USA website
www.pertronic.com