PERTRONIC
2-Way
Audio Distribution Module
ADM-2
TECHNICAL MANUAL

Valid For:

PCB Hardware: v0.31 and greater

PCB Firmware: v1.20.0 and greater

Issue 3.0

The content of this manual is copyright.

This document is to be used only for operating or maintaining Pertronic Fire Alarm systems.

This document is not to be reproduced, photocopied or passed in part or whole to a third party without the express, written authorization of

Pertronic Industries Pty Limited

Acronyms:

AAL	Analog Addressable Loop
EOL	End of Line
LED	Light Emitting Diode
O/C	Open-circuit
PCB	Printed Circuit Board
S/C	Short-Circuit

CONTENTS

1. INTRODUCTION 1
2. SYSTEM FEATURES 3
   - 2.1. Features 3
   - 2.2. PCB Layout 4
   - 2.3. ADM-2 Access Points 4
   - 2.4. LED Indicators 4
3. INSTALLATION 6
   - 3.1. Hardware 6
   - 3.2. Power Supply 6
   - 3.3. 100 V Line Output 6
   - 3.4. Audio Line Monitoring 6
   - 3.5. Channel Isolation 6
   - 3.6. Basic Application Connections 7
4. FAULTS 8
   - 4.1. Fault Outputs 8
   - 4.2. Fault Indicators 8
   - 4.3. Historic Faults 8
   - 4.4. Resetting the ADM-2 8
5. PRODUCT CODES 9

PERTRONIC SALES AND TECHNICAL SUPPORT 10

FIGURES

Figure 1-1 ADM-2-PMB125 1

Figure 1-2 ADM-2 Circuit Board 1

Figure 2-1: PCB Layout 4

Figure 3-1: Basic Application Connections 7

TABLES

Table 2-1 ADM-2 Access Points 4

Table 2-2 LED Indicators 5

Table 5-1: Product Codes 9

1. INTRODUCTION

The Pertronic Audio Distribution Module (ADM-2) creates a pair of independently monitored 100 VRMS audio lines (channels) from a single 100 VRMS audio line. This module simplifies the provision of two separate audio channels covering one area or evacuation zone.

A system built with an ADM-2 will continue operating even if one channel develops a fault. If either channel becomes short-circuited, output on both channels will be interrupted briefly. After a pause of about 2 seconds, the shorted channel will be disconnected. Output will then resume on the unaffected channel. The monitoring system will continue to monitor the shorted channel and it will automatically reconnect the channel if the fault is cleared. This ensures evacuation messages can be broadcast over one channel, even when the other has been compromised.

The ADM-2 can be installed remotely from the amplifier. This eliminates the need for two separate amplifiers and cables for each area or evacuation zone when duplicate audio circuits are required. The module can be powered from an analogue addressable loop, or from a separate 24 VDC supply.

The built-in fault monitoring system continuously monitors the 100 Volt output lines, or channels, for open-circuit or short-circuits, irrespective of whether the system is broadcasting an evacuation message, broadcasting non-urgent audio such as background music, or idling with no signal.

The Audio Distribution Module signals a fault condition to the amplifier or evacuation generator in the event of detecting a fault condition.

Figure 1-1 ADM-2-PMB125

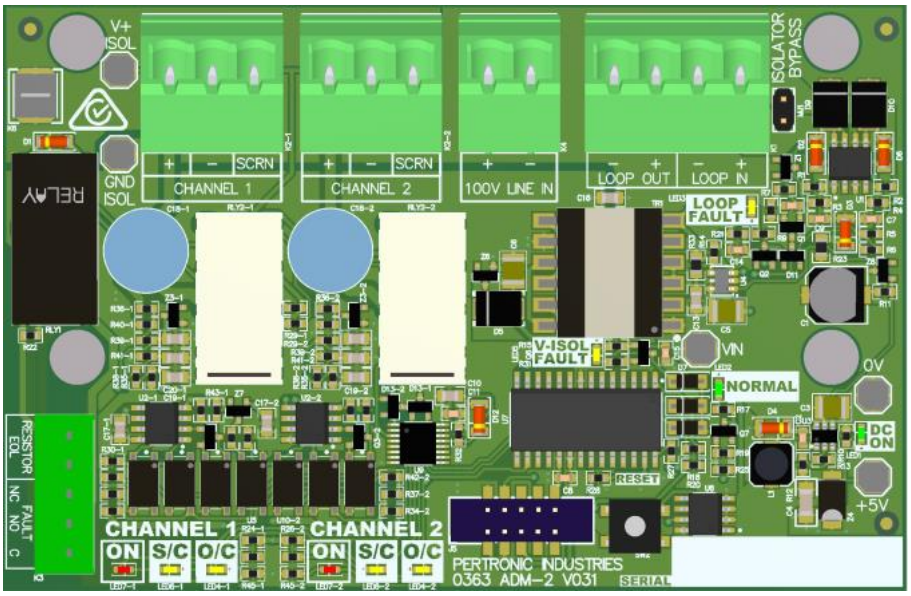

Figure 1-2 ADM-2 Circuit Board

SPECIFICATIONS

Case Dimensions:	125 x 125 x 55	L x W x D (mm)
Circuit Board:		
Dimensions	108 x 70 x 20	L x W x D (mm)
Mounting holes	90 x 37.5	L x W (mm)
Electrical:		
Operating voltage	15 Vdc – 32 Vdc (Nominal 24 Vdc)	Can be powered from an Analog Addressable Loop
Quiescent current	DC: 19 mA @ 27.4 Vdc	
Maximum fault current	DC: 35 mA @ 27.4 Vdc	
Protection	Reverse Polarity Protected	
100V Line Input:		
Maximum Voltage	100 Vrms	
Fault signalling	150kΩ placed in series with amplifier EOL resistor	(If amplifier EOL placed on K3)
100V Line Output:		
Power per channel	80 W	
Total power (2 channels):	160 W	
End Of Line (EOL) termination	47 kOhm 0.5W resistor	
Monitoring	Fully monitored for open-circuit or short-circuit fault conditions	
Recovery Time	2 seconds (approximately)	To resume transmission after detecting a short-circuit on any channel
Maximum dc block capacitance	270uF	
Fault Output:		
Relay rating:	2 A @ 30 Vdc Clean Contacts	Form C contact
Environmental		
Operating Temperature	-10 °C to +50 °C	
Humidity	≤ 95 % RH non-condensing	

2. SYSTEM FEATURES

2.1. Features

Short Isolation: If a short circuit is detected on an active channel, the shorted channel will be isolated as follows:

The amplifier will cease operation on both output channels. After a delay of approximately 2 seconds, the affected channel will turn OFF and the unaffected channel will return to normal operation.

The shorted channel will turn back ON if the short circuit condition is cleared.

Fault Indication: Each channel has an independent O/C LED and S/C LED. If a fault exists, the corresponding LED will turn ON. Once the fault has been remedied, the same LED will blink to indicate a historic fault. Pressing the RESET switch will remove all historic fault indications.

Fault Relay: The fault relay (and NORMAL LED) is energised when no faults currently exist. If any fault exists then the fault relay is de-energised.

Fault Signal: If any fault exists, a 150kΩ resistance is applied in series with the EOL resistor fitted to K3 to generate an open circuit fault indication on the connected Amplifier / EVAC Gen Module.

Channel ON: The Red Channel ON indicator will be ON whenever the channel is not isolated due to a short-circuit fault.

Earth Screen: The SCRN pin of each channel 100 V Line Output is directly connected to earth terminal K6. These connections provide for ground connection of the screen should screened audio cable be used for the line outputs.

Loop Power **Loop In** is connected through a Short Circuit Isolator to **Loop Out**. This allows the ADM-2 to be inserted in an Analog Addressable Loop in a similar manner to other loop devices and modules. Aside from the short circuit isolator, the ADM-2 does not interact with the loop.

The worst case ADM-2 power consumption must be considered in the Analog Addressable loop modelling.

Note: fitting jumper MJ1 bypasses the Short Circuit Isolator.

Alternate Power Any DC supply may be connected to **Loop In**, provided it meets the requirements in section 2.

EOL Resistor The ADM-2 should be placed at the remote end of the 100V line and the amplifier's EOL resistor should be fitted to K3. This allows the ADM-2 to be used with amplifiers requiring differing EOL resistor values and enables signalling of fault conditions to the connected line amplifier.

2.2. PCB Layout

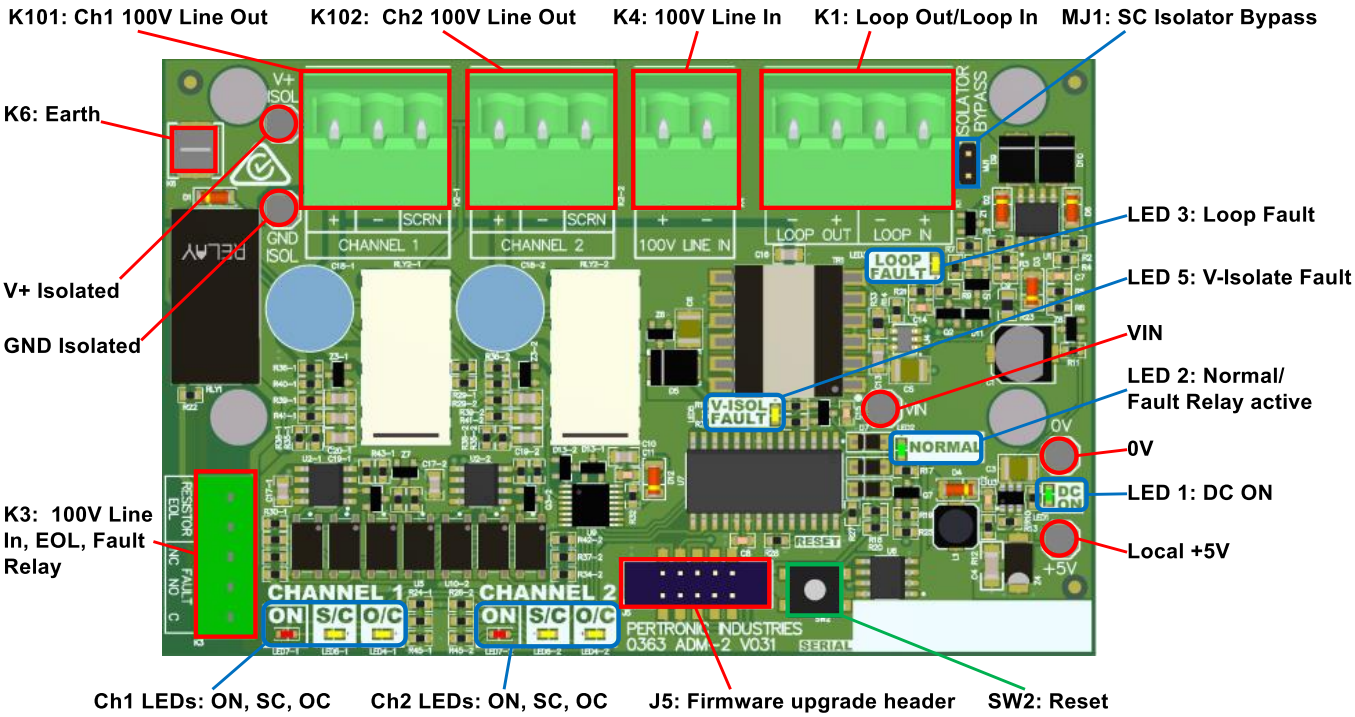

Figure 2-1: PCB Layout

2.3. ADM-2 Access Points

Component	Type	Description
K1	Connector	Analog Addressable Loop In and Loop Out
K3	Connector	100V Line In EOL resistor and Fault Relay
K4	Connector	100 V Line In
K6	Connector	Earth Connection for screened output cables
K101	Connector	Channel 1 100V Line Out
K201	Connector	Channel 2 100V Line Out
J5	Connector	Firmware upgrade header.
MJ1	Jumper	**Not Fitted**: Analog Addressable Loop Short Circuit Isolator is operational **Fitted**: Short Circuit Isolator is bypassed
SW2	Switch	Press momentarily to reset the ADM-2

Table 2-1 ADM-2 Access Points

2.4. LED Indicators

Component	LED Label	Colour	Description
LED 1	DC ON	Green	Turns ON when power is supplied to the ADM-2
LED 2	Normal	Green	Normally ON, turns OFF when there is a fault When off, the Fault Relay will also be in the released (or fault) state.

Component	LED Label	Colour	Description
LED 3	Loop Fault	Yellow	Turns on when the Loop Isolator is actuated (i.e. there is a short circuit on either side of the loop)
LED 5	V-Isol Fault	Yellow	Turns ON when the isolated power supply voltage is low
LED 7-1	CH1 ON	Red	Turns ON when channel 1 is ON
LED 4-1	CH1 O/C	Yellow	Turns ON when there is an O/C fault on channel 1 (Flashes to indicate a historic O/C fault)
LED 6-1	CH1 S/C	Yellow	Turns ON when there is a S/C fault on channel 1 (Flashes to indicate a historic S/C fault)
LED 7-2	CH2 ON	Red	Turns ON when channel 2 is ON
LED 6-2	CH2 O/C	Yellow	Turns ON when there is an O/C fault on channel 2 (Flashes to indicate a historic O/C fault)
LED 4-2	CH2 S/C	Yellow	Turns ON when there is a S/C fault on channel 2 (Flashes to indicate a historic S/C fault)

Table 2-2 LED Indicators

3. INSTALLATION

3.1. Hardware

The ADM-2-PMB125 comes in a plastic case ready for mounting.

3.2. Power Supply

The ADM-2 may be powered by either by inserting it into an Analog Addressable loop or connecting to a DC supply meeting the requirements in section 0 SPECIFICATIONS . The connected power source must be continuously available in order for the ADM-2 to continuously monitor the 100V line channel outputs. If powered from an Analog Addressable loop, the worst case ADM-2 power consumption must be considered in loop modelling and the ADM-2 does not appear as a device in the loop.

The green “DC ON” indicator is always ON when power is available.

3.3. 100 V Line Output

The 100 Volt line outputs are supplied with a small DC bias voltage for the monitoring system, see section 3.4 Audio Line Monitoring

PA Speakers used with the Audio Distribution Module must be rated to 100 Vrms and they must be fitted with a series capacitor to block the DC bias voltage used for loop monitoring. The capacitor must be bipolar and able to withstand 200 Volts (peak). The value should be approximately 1 µF per watt of power for each speaker. The parallel sum of all the dc blocking capacitors should not exceed the maximum dc block capacitance specified in section 0 SPECIFICATIONS.

A common problem of 100 V line PA installations is the coupling of unwanted noise into the 100 V line. Although the Audio Distribution Module has been designed to reduce the effects of coupled noise, it is recommended practice that all 100 V line wiring be separated from ALL OTHER wiring by at least 250 mm. This includes Mains wiring, ELV wiring, Loop wiring and telephone wiring.

3.4. Audio Line Monitoring

The ADM-2 audio output lines are monitored using a small floating DC bias voltage to check for the presence of the EOL resistor. This monitoring is always active, it can detect short-circuit and open circuit faults on the 100 V line. Each line must be terminated with a 47 kΩ, 0.5 W EOL resistor. The 100 V line outputs must not be spurred.

The DC bias voltage used to monitor the ADM-2 line outputs is floating with respect to ground and is DC-isolated from the ADM-2 “100 V Line In +” input. This allows any DC monitoring voltage provided on the incoming audio line to be used on the input side of the ADM-2 (i.e. the amplifier is monitoring its own EOL resistor) without interfering with the ADM-2 line monitoring. The amplifier EOL resistor (usually 10kOhms) should be placed in K3 so that the ADM-2 can send fault indications back to the amplifier.

3.5. Channel Isolation

When the red ‘ON’ LED is lit, the associated channel is turned ON by having its internal isolating relay contact closed. Output channels are individually turned OFF, or isolated, by opening the internal isolating relay contact on the channel 100 V Line ‘+’ connection.

3.6. Basic Application Connections

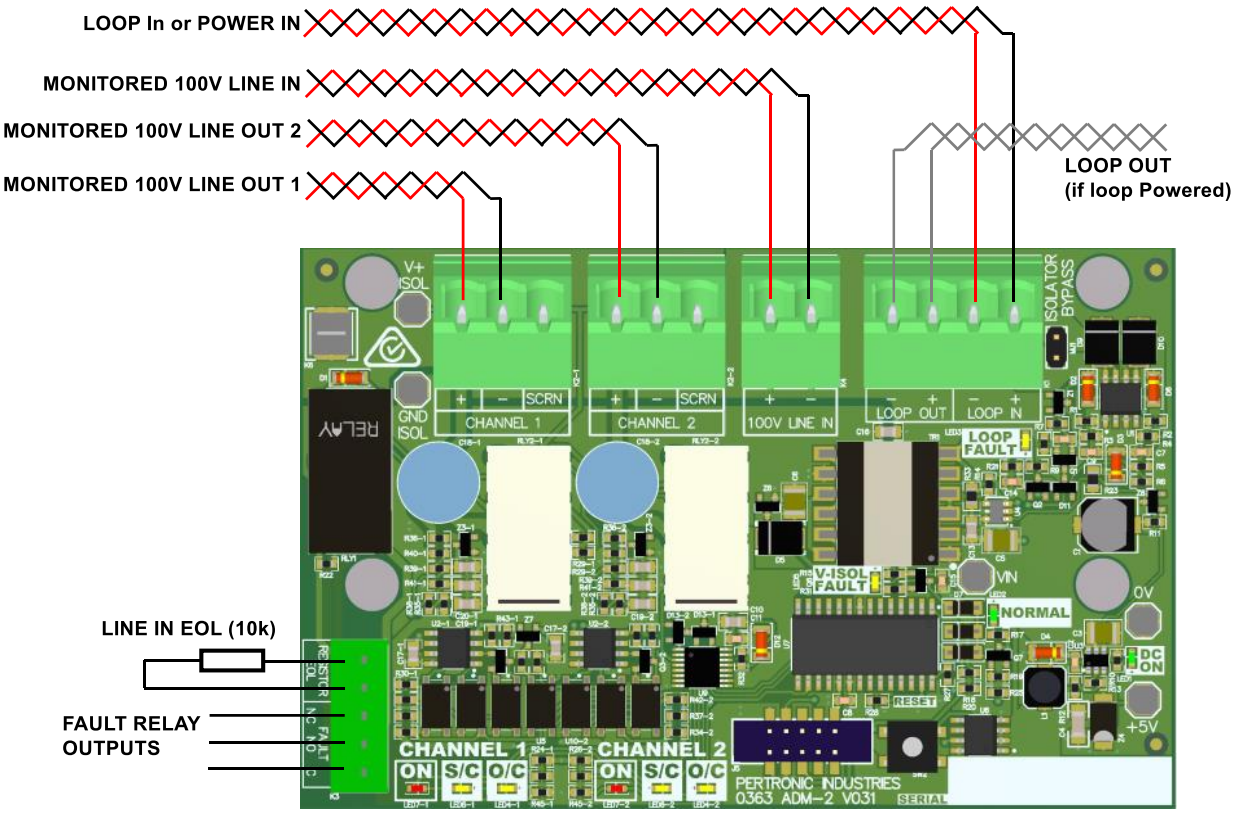

Figure 3-1: Basic Application Connections

4. FAULTS

4.1. Fault Outputs

A set of Fault Relay change-over contacts are provided on K3 for connection to other equipment for fault indication.

The Fault Relay also connects a 150kΩ resistor in series with the EOL resistor connected to K3 to indicate a fault condition to the connected amplifier or tone generator.

There are several possible causes of a fault indication, the monitoring faults are mentioned in Table 2-2 LED Indicators.

If no power is supplied to the ADM-2, the Fault Relay will be in the released, or fault, state.

4.2. Fault Indicators

If any output monitoring fault is present or the loop isolator is actuated, the associated LED will be ON, the Fault Relay will be in the released (or fault) state and a 150kΩ resistor will be connected in series with the EOL resistor connected to K3.

4.3. Historic Faults

If any output line monitoring fault has been present and subsequently cleared then the associated LED will FLASH to indicate an historic fault event. Historic faults alone will not keep the Fault Relay in the released (or fault) state. Other current faults may be present that will hold the Fault Relay in the released (or fault) state.

4.4. Resetting the ADM-2

Historic fault indications are cleared by briefly pressing the reset switch.

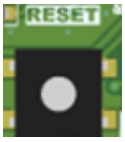

5. PRODUCT CODES

Description	Product Code
Audio Distribution Module, 2 way, mounted in PMB125 enclosure	ADM-2-PMB125
Audio Distribution Module 2-Way (PCB Only)	ADM-2

Table 5-1: Product Codes

Document Change History

Issue No	Reason for Update	Description of Changes	Author
Issue 1.0	First release		JPF
Issue 2.0	Case details clarified	CN2560, 08 Jan 2019	JPF
Issue 3.0	Changes to PCB, text and diagram changes	CN3390, 31 Oct 2023	RJK

PERTRONIC SALES AND TECHNICAL SUPPORT

New Zealand
Pertronic Industries Limited

Head Office
17 Eastern Hutt Road
Wingate
Lower Hutt
Phone +64 4 567 3229

sales@pertronic.co.nz
tech@pertronic.co.nz

Auckland
3 Gloucester Park Road
Onehunga
Auckland 1061
Phone +64 9 633 0226

auckland@pertronic.co.nz

New Zealand Website
www.pertronic.co.nz

Australia
Pertronic Industries Pty Limited

Melbourne
Unit B2
2A Westall Rd
Springvale
VIC 3171
Phone +61 3 9562 7577
sales.vic@pertronic.com.au

Sydney
Unit 9
38-46 South Street
Rydalmere
NSW 2116
Phone +61 2 9638 7655
sales.nsw@pertronic.com.au

Brisbane
Unit 3
43-49 Sandgate Rd
Albion
QLD 4010
Phone +61 7 3255 2222
sales.qld@pertronic.com.au

Adelaide
65 Manton Street
Hindmarsh
SA 5007
Phone +61 8 8340 9533
sales.sa@pertronic.com.au

Perth
Unit 6/1 Burchell Way
Kewdale
WA 6105
Phone +61 8 6555 3008
sales.wa@pertronic.com.au

Australian website
www.pertronic.com.au

USA
Pertronic Industries Inc

Phoenix
Scottsdale
Arizona 85258
Phone +1 480 452 8330
Keith.Bowler@pertronic.com

Guilford
Connecticut 06437
Phone +1 203 598 1133
Raymond.Krickmier@pertronic.com

USA website
www.pertronic.com