PERTRONIC
12A 24V PSU-300W
(24/12ASWMPS-MK2)
TECHNICAL MANUAL
AUSTRALIA
AS 4428.5:1998

Valid for:

PCB Hardware:	**v1.10**
PCB Firmware:	**v1.04**

Issue 1.2

The contents of this manual are copyright.

This document is to be used only for operating Pertronic 24V/12A PSU

This document is not to be reproduced, photocopied or passed in part or whole to a third party without the express, written authorization of Pertronic Industries Pty. Ltd

CONTENTS

1.	INTRODUCTION		4
	1.1	Standalone mode	4
	1.2	Panel Controlled Mode	4
2.	SPECIFICATION		5
3.	FUNCTIONAL DESCRIPTION		6
	3.1	Standalone Setting	6
	3.2	Panel Controller Mode	6
	3.3	Auto Test	6
	3.4	Mains Lost	7
	3.5	Reset Switch Operation	7
	3.6	Auto Test Inhibit input	7
	3.7	Australia/New Zealand selection	7
	3.8	Fault Relay Operation and Battery Fault Indication	7
	3.9	Fault indications	8
	3.10	Battery Charger Voltage Setting	8
	3.11	Battery Charge Current Setting	9
	3.12	Link Settings	9
	3.13	Battery Capacity	10
	3.14	Approved Batteries	10
	3.15	Mounting	10
	3.16	Commissioning Steps	10
4.	MAINTENANCE AND REPAIR INSTRUCTIONS		12
5.	CONNECTION DIAGRAM		14
6.	ORDER CODES:		16
7.	DOCUMENT CHANGE HISTORY		16
PERTRONIC SALES AND TECHNICAL SUPPORT			17

FIGURES

Figure 1: The 24/12A SWMPS Mk2 5
Figure 2: Link positions for internal and external temperature monitoring 8
Figure 3: PSU PCB Layout and Interconnections 14
Figure 4: Connecting to a Power Distribution Board 15

TABLES

Table 1: Encoded Fault Indications and Fault Relay Delay Times 8
Table 2: Maximum charge currents 9
Table 3: Operating mode links..... 9
Table 4: List of approved batteries.....10
Table 5: Fault, Maintenance and Repair Instructions Table 13

1. INTRODUCTION

The *24/12ASWMPS-MK2* is a nominal 24Volt current limited power supply that has been designed and tested to the AS4428.5 standard. The unit is compact, and it is intended to be mounted into Pertronic Fire Panels and Auxiliary power supply cabinets.

A link option allows two modes of operation: standalone mode or panel-controlled mode. Link options are also provided to select internal or external temperature sensing as well as the required battery capacity charger setting.

1.1 Standalone mode

When the power supply is in standalone mode, a microprocessor is used to monitor and control the power supply, battery voltage, and the 24 hour Battery test function.

Four indicator LEDs are mounted on the *24/12ASWMPS-MK2* PCB:

- The green POWER ON LED illuminates when the *24/12ASWMPS-MK2* PCB has power.
- The green MAINS ON LED illuminates when the mains supply is present, and the power supply is functioning correctly.
- The yellow AUTOTEST LED illuminates when the *PSU* performs the 24 hour test.
- The yellow BATTERY FAULT LED illuminates to indicate faults associated with the batteries on the system.

In addition, an optional three-way LED board is available to allow integration of the *24/12ASWMPS-MK2* into the Auxiliary PSU monitor cabinet. An onboard 7-segment display is used to display fault information– current and historical (latched).

Change-over relay contacts are provided to give non-latching fault indication to external equipment. The fault relay is energised when the *24/12ASWMPS-MK2* has no fault conditions; and is released (after a delay, depending on the type of fault), to indicate the fault or faults present.

Operation of the on board reset switch (momentary action) will initialise the 24-hour test timer. The reset switch also resets any latched faults that may be present.

Immediate commencement of the 24-hour test can also be initiated by operating the reset switch for more than 3 seconds.

1.2 Panel Controlled Mode

The *24/12ASWMPS-MK2* may also be controlled from Pertronic F100, F120 and F16e master boards. In this mode the *24/12ASWMPS-MK2* disables its internal 24-hour auto-test and also disables Latching Fault indications and the fault relay. The Country setting does not apply when the power supply is controlled by panel master boards.

When the power supply is in panel controlled mode, the LEDs denote the following:

- The green POWER ON LED illuminates when the *24/12ASWMPS-MK2* PCB has power
- The green MAINS ON LED illuminates when the mains supply is present, and the PSU is functioning correctly.
- The yellow AUTOTEST LED illuminates when the *Panel* performs the 24 hour test
- The yellow BATTERY FAULT LED illuminates to indicate faults associated with the batteries on the system.

2. SPECIFICATION

Mechanical:

Overall Dimensions:	217 H x 75 W x 107 D (mm)
Net Weight:	1.25 Kg, not including batteries
Meanwell (HRPG-300-24)	
Approvals:	UL 60950-1, EN60950-1

Power Supply:

Type	Pertronic Part Number: 24/12ASWMPS-MK2
AC Input:	100 Vac – 264Vac 47Hz - 63Hz single phase
Input Current : (typical)	2.5A/230VAC
Power Factor : (typical)	0.95
Operating Temperature Range:	-10°C to 50°C (10% to 95%RH)
Output Voltage:	27.4V DC at 20 °C
Temperature coefficient:	0.145%/°C set for battery charging
Maximum Output Current:	12A at 24V (11A at 27.4V)
Charging Current:	Selectable based on battery capacity
Battery Type:	2 x 12V Sealed Lead-Acid, from 7 AH (GelCell)

Figure 1: The 24/12A SWMPS Mk2

Controller Specs:

Controller Supply Current	82mA at 27.4V
Battery Presence test	200ms/10 sec (Stand-alone mode)
Automatic Battery Test:	60 minutes load test every 24 hours
Controls:	Reset / Timer initialisation switch
PCB Indications:	Power On LED Mains On LED Battery Fault LED Auto Test LED 7-Segment Display for Fault Indication
Connections:	3 x DC Out connectors Battery connector DC Power IN 'Indicator LED' board connector Ext Temperature Sensor Input connector AutoTest Inhibit connector
Links:	Aus / NZ Country select Battery Capacity select (7, 15, 24, 38 and 60+Ah) Panel / Standalone mode select Internal / External Temperature Sensor select
Fault Relay:	Normally energized. NO/NC contacts available 1A, 24 V DC contact rating

3. FUNCTIONAL DESCRIPTION

3.1 Standalone Setting

The *24/12ASWMPS-MK2* has two modes of operation: standalone, and panel-controlled. The mode of operation is selected by the 'panel controller' link. If *not fitted* the *24/12ASWMPS-MK2* operates as a standalone charger with 24-hour timer facility.

3.2 Panel Controller Mode

The *24/12ASWMPS-MK2* operates in the 'panel-controller' mode when the 'panel controller' link is fitted. In Panel Controlled Mode all latching Faults are disabled.

Note: ensure that the control cable from the FIP Master board is connected to 'Panel PSU Control' on the PSU controller.

3.3 Auto Test

In standalone mode the *24/12ASWMPS-MK2* monitors the battery voltage, and operates the power supply at reduced voltage for 1 hour every 24 hours to carry out a battery capacity test. During the one hour reduced voltage period, the yellow Auto Test LED is lit. The auto test will not be carried out if mains supply is absent or the battery is low or missing. The Auto test will be stopped if an S/C condition is presented on the AutoTest inhibit input.

When the 24/12ASWMPS-MK2 is in ‘Panel Controller’ mode, monitoring and 24-hour test is managed by the panel.

3.4 Mains Lost

A ‘Mains Lost’ fault occurs when the mains supply voltage has been absent continuously for 55 minutes.

The Mains LED turns off to signal that mains power is missing.

Battery presence and 24-hour tests are not performed by the controller board when the mains power is lost or when the *24/12ASWMPS-MK2* is controlled via a fire alarm system master board.

3.5 Reset Switch Operation

A quick press of the RESET switch resets latched faults and restarts the 24-hour timer. The 1 hour battery test commences 23 hours after reset and then every 24 hours thereafter.

When the RESET switch is held for at least 3 seconds, the Auto Test LED turns ON and the 1 hour battery test is started. The next battery test will begin 23 hours from this time.

3.6 Auto Test Inhibit input

When used in Standalone mode the Auto Test Inhibit input stops the Battery capacity test if it is in progress. It is recommended to connect it to a relay that provides a volt-free contact closure whenever load current is drawn e.g. for alarm annunciation, evacuation and the like. If the inhibit input is already S/C then the 24 hour test won’t start. Once the condition inhibiting the Auto test is removed then the next Auto Test will commence when next scheduled.

3.7 Australia/New Zealand selection

Low Battery fault is latched until manually reset when in Aus mode. This fault is not latched in NZ mode.

3.8 Fault Relay Operation and Battery Fault Indication

The fault relay is normally energised, and de-energises to indicate that a fault has occurred. The delays for the fault types are shown in Section 3.8 on the next page.

The yellow Battery Fault LED indicates that the *24/12ASWMPS-MK2* is in a fault condition; the Fault can be decoded using the 7-segment Fault Display.

The high and low charger voltage conditions are not tested during 24 hour test.

3.9 Fault indications

Encoded Fault Indications and Fault Relay Delay times

Fault/Fault	Value Note	Value displayed		Delay Before Activating the Defect/Fault Relay
		Non-latched	Latched*	
Low Charger Voltage	<25.87 V	1	7	20 Seconds
High charger voltage	> 28.5 V	2	8	20 seconds
Low battery Voltage	<24.36 V	3	9	20 seconds
Mains lost / PSU Failure		4	A	55 minutes.
Battery Missing	< 23.5 V	5	b	20 Seconds
Temperature Sensor Failure/ Sensor select links not fitted.		6	C	10 Seconds

Table 1: Encoded Fault Indications and Fault Relay Delay Times

***Note**: Latched faults (Stand Alone mode only) remain until the reset button is pressed.

3.10 Battery Charger Voltage Setting

The battery charger voltage is factory set to 27.4 V ± 0.1 V at 20°C and is temperature compensated. The charger voltage decreases as the ambient temperature rises and increases as the ambient temperature drops.

An 'Internal' temperature sensor is used to measure the ambient temperature surrounding the PSU and the power supply is usually supplied with this option selected.

To set for 'Internal' temperature sensing, insert the link to 'Int'– see Figure 2.

An 'External' connection is provided for when remote temperature measurement is required. This mode is selected by fitting a link as shown below. The external sensor cable plugs into the connector labelled 'Ext Sense'– see Figure 2.

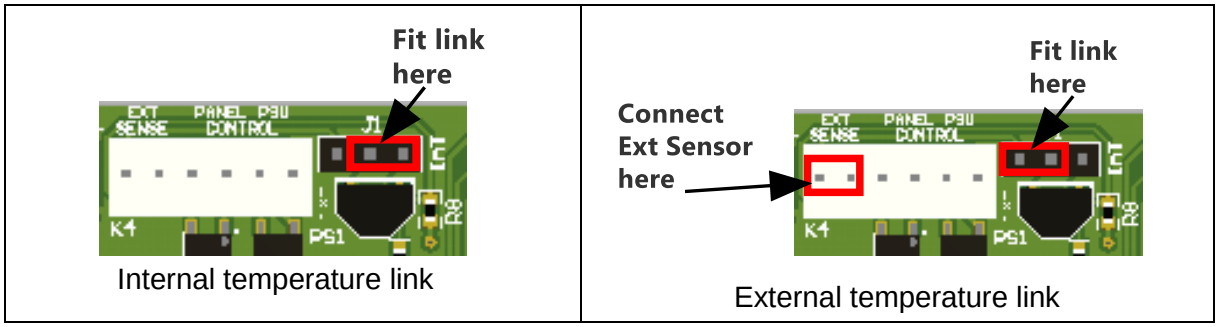

Figure 2: Link positions for internal and external temperature monitoring

When a link is not fitted in either position the 24/12ASWMPS-MK2 outputs a constant 27.4V and triggers a 'Temperature sensor' fault.

3.11 Battery Charge Current Setting

Maximum charging current can also be controlled by the *24/12ASWMPSU.* Five links (7, 15, 24, 38AH and SPARE 1) are used for selecting the capacity of the connected batteries. It is important that the installer select the appropriate capacity. Incorrectly selected capacity could result in excess charging current, which reduces the life of lead-acid batteries, or under charging resulting in possible non-compliance with standards requirements. Battery capacity and maximum charge currents can be determined by referring to the battery manufacturer's technical details. See below table for charging characteristics for each of the available settings. If battery capacities other than those specified below are used, select an appropriate maximum charge current as close as possible to that required. Typically sealed lead acid batteries should be charged at 0.2 of the battery capacity in order to obtain a good recharge period with minimal change to life expectancy, when not being used in a cyclic manner.

Capacity link versus Maximum Charging Current	
Capacity setting	**Charge Current**
7AH	1.4A
15AH*	3.4A
24AH	4.8A
38AH	7.6A
60AH	Max 12A, dependent on load

Table 2: Maximum charge currents

*__Note__: If no link is fitted, the Capacity defaults to 15AH (3.4A).

3.12 Link Settings

The following link options are provided for different operating modes:

Link Function	IN		OUT
7AH (1)	7AH Battery fitted		Not 7AH (2)
15AH (1)	15AH Battery fitted		Not 15AH (2)
24AH (1)	24AH Battery fitted		Not 24AH (2)
38AH (1)	38AH Battery fitted		Not 38AH (2)
60AH (1)	60AH or above Battery fitted		Not 60AH+ (2)
SPARE	Not used (do not fit)		
Country Select	NZ mode		Australia mode
Panel control	PSU connected to panel		Stand-alone mode
Temperature Sensor	Internal	external	Fault

Table 3: Operating mode links

Note:

1. For battery capacity link selection, the setting of the lowest fitted link applies.
2. When no battery capacity links are fitted, battery capacity defaults to 15AH.

3.13 Battery Capacity

The *24/12ASWMPS-MK2* is designed to use two 12V sealed lead-acid batteries, rated from 7AH. The battery is protected by an inline fuse.

Selection of the system batteries is an important consideration to ensure the connected equipment functions correctly if the Mains supply is absent

To calculate the system load, use the Battery Calculator on the Pertronic website.

3.14 Approved Batteries

Manufacturer	Part Number	Description
Auscell	CJ12-7	12V 7AH
Auscell	CJ12-12	12V 12AH
Auscell	CJ12-18	12V 18AH
Auscell	CJ12-24	12V 24AH
Auscell	CJ12-26	12V 26AH
Auscell	CJ12-33	12V 33AH
Auscell	CJ12-40	12V 40AH
Auscell	CJ12-45	12V 45AH
Auscell	CJ12-55	12V 55AH
Auscell	CJ12-60	12V 60AH
Auscell	CJ12-75	12V 75AH
Auscell	CJ12-85	12V 85AH

Table 4: List of approved batteries

3.15 Mounting

The *24/12ASWMPS-MK2* is supplied with a mounting bracket for mounting into Pertronic Panels that are compatible with the 4A Offline Power Supply design. It should be mounted in a clean dry area, which provides for natural convection between the unit and surrounding electrical equipment. This ensures the cooling slots and fan are not restricted in any way. The *24/12ASWMPS-MK2* should be mounted so that the fan is ‘on top’.

3.16 Commissioning Steps

1. For initial commissioning it is recommended that the power supply be connected to the Mains without load. Check that the appropriate Capacity link that is selected matches the capacity of the batteries connected, or the nearest available. The green POWER LED and MAINS ON LED should illuminate. The load should then be connected to the power supply and run without the batteries connected.

2. After a successful run without batteries and with the load connected, connect the two 12V batteries to the power supply. Make sure to observe correct polarities.

NOTE: A suitably rated external battery fuse must be used on all installations.

3. Allow for the batteries to charge in accordance with the manufacturer's recommendations.
4. Press the RESET switch for about 2 seconds. After a few seconds the Auto Test LED will be illuminated indicating that the 1-hour-long battery test has started. Check for any fault conditions—including a missing battery. Future auto tests will occur at 24-hour intervals beginning with the time of this reset (Stand-alone mode only).
5. Briefly push the RESET switch AGAIN. This cancels the 1-hour battery test, and the equipment reverts to charge mode, in which case the battery test will commence again after 23 hours (Stand-alone mode only).
6. Provided the battery has adequate charge and no fault is present, operate the battery test, and then activate the connected load—sounders, amplifiers, and the like—to verify proper operation.
7. Then, cancel the battery test, and repeat the load test: verify that the battery voltage has increased due to the charger being active.
8. If applicable, ensure the Fault output contacts are connected to the Fire Alarm External Fault input—so as to enable monitoring for any PSU/battery problems.

4. MAINTENANCE AND REPAIR INSTRUCTIONS

Annual routine maintenance is not required provided the power supply unit is installed and operated in accordance with Section 3.35 of this Technical Manual.

General fault finding work should proceed by checking that the green MAINS ON LED is illuminated, and checking for fault indications encoded on the 7 Segment display.

Note:

The 24/12ASWMPS-MK2 **contains no user serviceable parts**. If faulty, please return the complete unit (PSU + Controller) to Pertronic for repair or replacement.

Replacement or re-wiring of the 24/12ASWMPS-MK2 power supply must only be carried out by suitably qualified personnel.

If a fault or faults occur, carry out the following actions:

Fault/Fault	Digit displayed on 7-segment display	Action Required
Low charger voltage	1 / 7	Check the current charger voltage, if necessary, without load or batteries. This should be between 26.4Vdc and 28.2Vdc. If it is below 26.4Vdc, replace the 24/12ASWMPS-MK2 power supply. If the charger voltage is within the allowed limits, reset the system, and check again for low charger voltage. If the fault persists over subsequent maintenance visits, replace the 24/12ASWMPS-MK2 power supply or batteries.
High Charger Voltage	2 / 8	Check the current charger voltage. This should be between 26.4Vdc and 28.2Vdc. If it is above 28.2Vdc, replace the 24/12ASWMPS-MK2 power supply. If the charger voltage is within the allowed limits, reset the system and check again for high charger voltage. If the fault persists over subsequent maintenance visits, replace the 24/12ASWMPS-MK2 power supply
Low battery	3 / 9	The Low Battery Fault only occurs during the 24hr test cycle and indicates insufficient Battery capacity to run the system. Check system loading / battery standby capacity. If System loading is ok, replace batteries. Latched in AUS mode. Clears at next 24hr test if test passes.

Fault/Fault	Digit displayed on 7-segment display	Action Required
Mains Lost / PSU Fault	4 / A	This indicates that the Mains supply was disconnected for at least 1 hour since the last maintenance check or that the PSU has failed. Identify the cause for the Mains failure, and take the appropriate action.
Battery Absent	5 / B	Indicates the battery has failed or is not electrically connected to the monitor board. Check the battery leads, connections, and in-line battery fuse. If leads and connections are correct, replace the batteries or fuse, and check correct operation by starting an Autotest—refer to Reset instructions. Note: This fault condition is not tested for during mains failure, nor for the 60 minutes during a 24-hour test.
Temperature Sensor Failure	6 / C	This indicates that there is a problem with the 24/12ASWMPS-MK2 Temperature Sensor. Check that the Temperature select link is fitted in the correct position. If 'internal sensor' is selected, return the 24/12ASWMPS-MK2 for repair. If 'external sensor' is selected, check wiring, or replace external Temperature sensor.

Table 5: Fault, Maintenance and Repair Instructions Table

5. CONNECTION DIAGRAMS

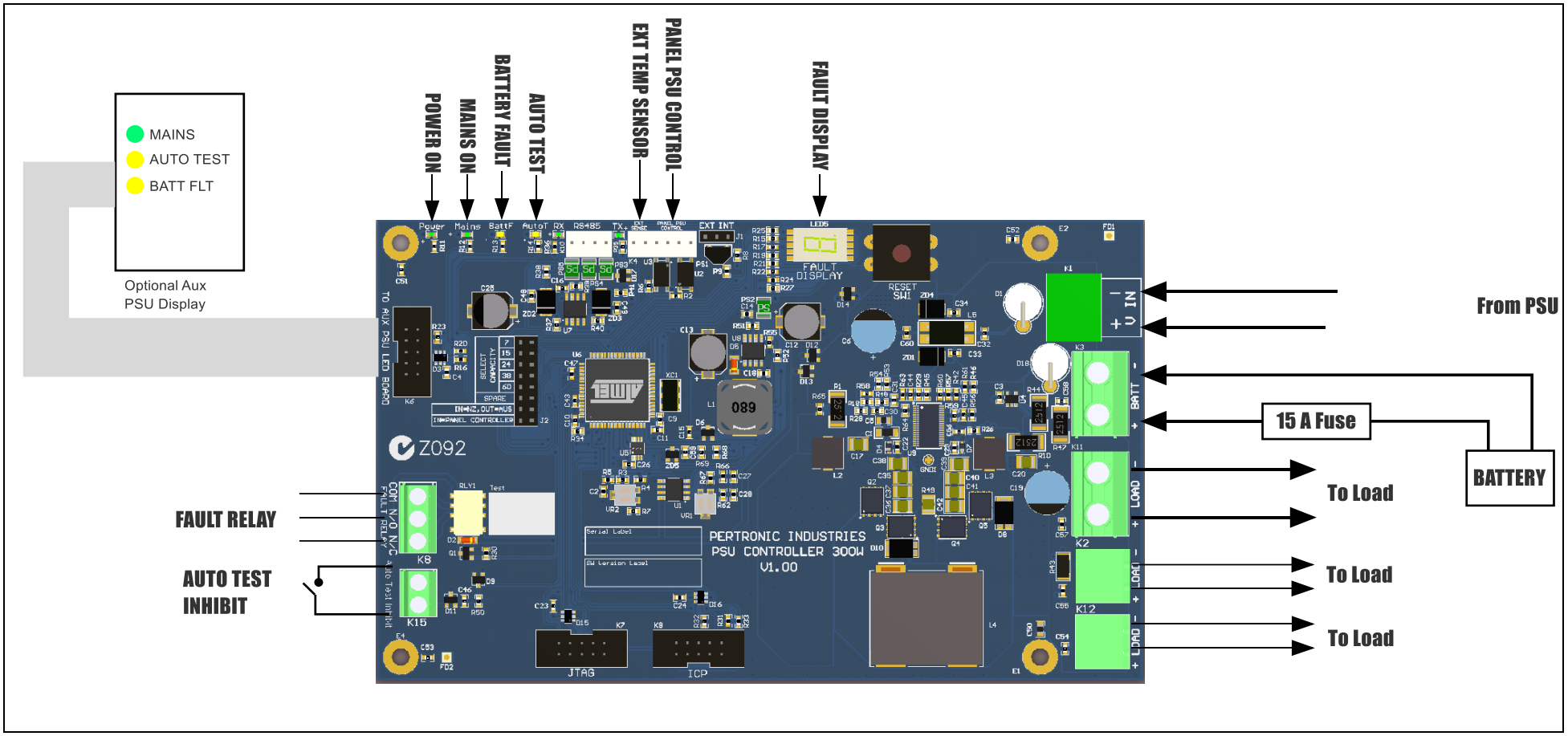

Figure 3: PSU PCB Layout and Interconnections

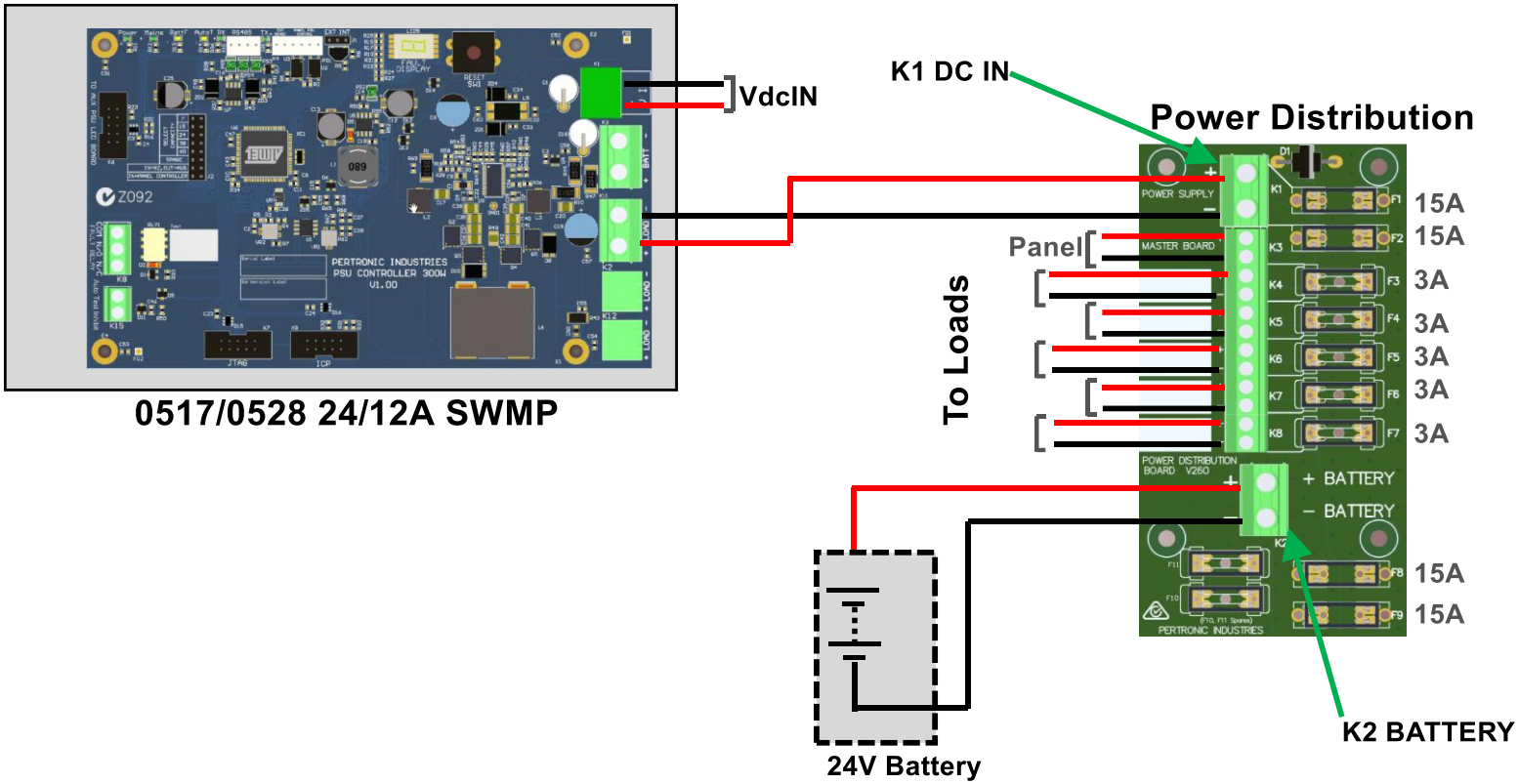

Figure 4: Connecting to a Power Distribution Board

6. ORDER CODES:

Order Code	Description
24/12ASWMPS-MK2	24V 12A PSU with Controller

7. DOCUMENT CHANGE HISTORY

Issue Number	Date	Reason for Update	Change Note	Author
Issue 1	30/1/2013	First Release		RDB
Issue 1.1	01/04/2022	Reformat, minor errors	CN3165	RJK
Issue 1.2	19/08/2024	Reformat, minor changes, added interconnection diagram		RJK

PERTRONIC SALES AND TECHNICAL SUPPORT

New Zealand

Pertronic Industries Limited

Head Office, Wellington

17 Eastern Hutt Road
Wingate
Lower Hutt
Phone +64 4 5673229
sales@pertronic.co.nz
tech@pertronic.co.nz

Christchurch

35 Buchanans Road,
Hei Hei
Christchurch 8042
Phone +64 3 599 9136
christchurch@pertronic.co.nz

Auckland

3 Gloucester Park Road
Onehunga
Auckland 1061
Phone +64 9 633 0226
auckland@pertronic.co.nz

New Zealand website
www.pertronic.co.nz

Australia

Pertronic Industries Pty Limited

Melbourne

Unit B2/2A Westall Rd
Springvale
VIC 3171
Phone +61 3 9562 7577
sales.vic@pertronic.com.au

Brisbane

Unit 3
43-49 Sandgate Rd
Albion
QLD 4010
Phone +61 7 3255 2222
sales.qld@pertronic.com.au

Perth

6/1 Burchell Way
Kewdale
WA 6105
Phone +61 8 6555 3008
sales.wa@pertronic.com.au

Sydney

Unit 9/38-46 South Street
Rydalmere
NSW 2116
Phone +61 2 9638 7655
sales.nsw@pertronic.com.au

Adelaide

65 Manton Street
Hindmarsh
SA 5007
Phone +61 8 8340 9533
sales.sa@pertronic.com.au

Australian website
www.pertronic.com.au

USA

Pertronic Industries Inc

Phoenix
Corporate Office
16597 N. 92nd Street
Suite 110, Scottsdale, AZ 85260
Phone +1 480 452 8330
Keith.Bowler@pertronic.com
Doug.Woosley@pertronic.com

Guilford
Connecticut 06437
Phone +1 203 598 1133
Raymond.Krickmier@pertronic.com

USA website
www.pertronic.com