• **Melbourne**

Unit B2
2A Westall Rd
Springvale
VIC 3171
Tel (03) 9562 7577
sales.vic@pertronic.com.au

• **Sydney**

Unit 19
287 Victoria Rd
Rydalmere
NSW 2116
Tel (02) 9638 7655
sales.nsw@pertronic.com.au

• **Brisbane**

Unit 3
43 Sandgate Rd
Albion
QLD 4010
Tel (07) 3255 2222
sales.qld@pertronic.com.au

• **Adelaide**

65 Manton St
Hindmarsh
SA 5007
Tel (08) 8340 9533
sales.sa@pertronic.com.au

• **Perth**

3/71 Beringarra Ave
Malaga
WA 6090
Tel (08) 6555 3008

www.pertronic.com.au

PERTRONIC
F100A
AVR-256
TECHNICAL MANUAL
AUSTRALIA
AS 4428.1:1998

Valid for F100A panels

Master PCB:	**v3.01 and greater**
Software:	**v5.22 and greater**
Configuration Utility:	**v5.14 or greater**

Issue 26.3

Serial Number:

Date of Manufacture: … / … / …

The contents of this manual are copyright.

This document is to be used only for operating *Pertronic F100A Fire Alarm* systems.

This document is not to be reproduced, photocopied or passed in part or whole to a third party without the express, written authorization of Pertronic Industries Pty Ltd

FIREFIGHTER FACILITY
ALARM
FAULT
ISOLATE
Pertronic F100A System Normal
10:30:45 Tue-01-Sep-2009
MAINS
PSU FAULT
BRIGADE CALLED
EXT BELL ISOLATE
WARN SYSTEM ISOLATE
PREVIOUS
NEXT
ACK
RESET
ISOLATE
DOOR HOLDER ISOLATE
ACF ISOLATE
WARN SYSTEM ON
F1
F2
F3
F4
F5
F6
DEC
INC
LOOP
DEVICE
ENTER
MENU/ESC
PERTRONIC
PERTRONIC INDUSTRIES
F100A ANALOGUE ADDRESSABLE FIRE ALARM SYSTEM
OFF
AUTO
ON
OFF
FAULT
ON
CARPARK EXHAUST ONE
CARPARK EXHAUST TWO
PUMP STATUS
PUMP ONE
Running
Fail to Start
PUMP TWO
Running
Fail to Start
THESE CONTROLS SHALL BE OPERATED BY AUTHORIZED PERSONNEL ONLY
ROMTECK
PROTECTED PREMISES UNIT
TEST
POLL
BAT.
FIRE
FAULT
TEST
NORMAL
FIRE ALARM
BREAK GLASS
PRESS HERE

CONTENTS

1. INTRODUCTION 1
    1.1 Functional Description 1
    1.2 Overview of Features 2
    1.3 Specifications 4
2. F100A FRONT PANEL CONTROLS AND DISPLAY 7
    2.1 System Indicators 8
    2.2 Fire-Fighter Facility 9
    2.3 Engineering / Operator Controls 11
    2.4 F100 Alphanumeric LCD Display and Menu Functions 12
    2.5 Operating the Fire-Fighter Facility 19
    2.6 Devices in Alarm – Acknowledge, Reset, and Isolate 20
    2.7 Buzzer Disable Switch 22
3. SYSTEM STARTUP 23
    3.1 Start-up Procedure 23
    3.2 Start-Up Errors 24
4. ADDRESSABLE DEVICES 25
    4.1 Drift Compensation 25
    4.2 Detector Alarm Sensitivity Levels 26
    4.3 Pre-Alarm Sensitivity Levels 26
    4.4 Maintenance Level 27
    4.5 Low Fault Signal 27
    4.6 Selecting Detectors for Maintenance 27
    4.7 Virtual Detectors 34
    4.8 Manual Call-Points 35
    4.9 Monitor Modules 36
    4.10 Loop Responder 38
    4.11 Loop Relays 38
    4.12 Fan Controller 39
    4.13 Isolation between Zones 41
    4.14 Loop Device Default Programming 42
5. F100A PERIPHERALS 43
    5.1 2-Loop Expansion PCB 43
    5.2 LED Mimics 43
    5.3 100Vrms Amplifiers 43
    5.4 LCD Mimic 44
    5.5 GPIB Printer Interface 44
    5.6 GPIB Pager Interface 44
    5.7 Network Interface 44

6. RS485 BUS 45
7. MAPPING 47
7.1 Common Output Functions 47
7.2 Input Functions 48
7.3 Loop Output Devices 49
7.4 Groups 49
8. OPERATING THE USER MENU 50
8.1 Reset – System Reset 50
8.2 Status – Status Menu 51
8.3 Log – Event Log Menu 54
8.4 Event Log Messages 55
8.5 Event Message Description 55
8.6 Isol – Zone and Input Device Isolate 59
8.7 Walk – Enter Walk Test 63
8.8 System – Display the System Status 63
8.9 Clock – Set Time and Date 63
8.10 Test – Auto, Fire, Fault, and Lamp Tests 64
8.11 Diagnostic Display 64
8.12 Engineer's Menu 65
9. OPERATING THE ENGINEER'S MENU 66
9.1 Output Mapping Details 67
9.2 Edit Menu 71
9.3 SysFlag – System Flags Menu 96
9.4 Learn – Automatic Device Configuration 98
9.5 Mimic – Set Number of LCD and LED Mimics and Network Mode 99
9.6 Engineers More Sub-Menu 100
10. SYSTEM FEATURES 102
10.1 Fire Signalling Relay (Master Alarm) 102
10.2 Local Manual Call Point Input 102
10.3 Fault Signalling Relay 102
10.4 Warning System and Extension Bell Relays 102
10.5 ACF and ACFM Relays 103
10.6 General Purpose (GP) Relay 103
10.7 Door Holder Relay 103
10.8 Internal Sounder/Buzzer 104
10.9 24 Hour Auto-Test 104
10.10 PCB Master Reset (RESET) 104
10.11 Memory Lock 105
10.12 Timer Power Supply 105
10.13 Battery Capacity 105
10.14 Power Supply Fault Indication 106
10.15 Loss of Mains 106

10.16 Door Interlock 106
10.17 Door Open Warning 107
10.18 Door Closure – Test for Additional Devices 107
10.19 2-Loop Extension Board 107
10.20 Internal Loop 1, 2 Connection 107
10.21 Earth Connection and Monitoring 108
10.22 Detector and Module LED Disable 108
11. PC CONFIGURATION 109
12. DETECTOR AND MODULE COMPATIBILITY 111
12.1 Actuating Devices 111
12.2 System Modules 111
13. ORDERING INFORMATION AND SPARE PARTS 112
13.1 Ordering Information 112
13.2 Spare Parts 114
14. INSTALLATION INSTRUCTIONS 115
14.1 Pre-Installation Check 115
14.2 Panel Installation and Power Connection 115
14.3 Other External Devices 115
15. MONTHLY TESTING 117
16. DRAWINGS 118
17. APPENDIX A – GENERAL WIRING GUIDE 125
17.1 Loop Wiring Specification 125
17.2 Common Finding Techniques 127
17.3 RS-485 and RS-232 Circuits 128
17.4 Loop Responder Wiring 128
18. APPENDIX B- F100 OPERATING INSTRUCTIONS 129
19. APPENDIX C – ISOLATE TIMER MODULE 130
19.1 Product Overview: 130
19.2 Functions: 130
19.3 Features: 130
19.4 Panel configuration 130
20. DOCUMENT CHANGE HISTORY 132

DIAGRAMS

Figure 1: F100A Block Diagram 1
Figure 2: F100A Front Panel 7
Figure 3: Fire-Fighter Facility 20
Figure 4: Device Labelling 25
Figure 4.5.1: Drift Compensation Overview 26
Figure 6: Virtual Acclimate Grouping 34
Figure 7: Virtual Laser Grouping 34
Figure 8: Isolation between Zones 41
Figure 9: Example of Mapping 47
Figure 10: Warning System Mute Mapping Example 47
Figure 11: User Menu Function Tree 50
Figure 12: Engineer's Menu Function Tree 67
Figure 13: Edit Menu Function Tree 72
Figure 14: F100A Configuration Utility Main window 109
Figure 15: F100A Configuration Utility Status window 110
Figure 16: F100A Configuration Utility LCD Simulator 110
Figure 17: F100A Board Layout 118
Figure 18: Detector Wiring 119
Figure 19: Loop Relay Wiring 120
Figure 20: Bell & ACF Monitored Output Wiring 121
Figure 21: System Wiring—using 4A Power Supply 122
Figure 22: System Wiring—using 12A Power Supply 122
Figure 23: F100A Case Dimensions 123

TABLES

Table 1.3:1: Specifications 6
Table 2.4:1: General Information Messages 14
Table 2.4:2: System Fault Messages 16
Table 2.4:3: Alarm Events 17
Table 2.4:4: LCD Isolation Event Messages 18
Table 2.4:5: LCD System Event Messages 19
Table 3.2:1: Loop Device Fault Type Descriptions 24
Table 4.6:1: Analogue-Addressable Detectors 28
Table 4.6:2: Device Parameters 30
Table 4.6.3: Detector Sensitivity Levels 32
Table 4.9:1: Input Module Type Designator 37
Table 4.11:1: Loop Relay Types 39
Table 4.12:1: Fan Control Units 39
Table 4.14:1: Loop Device Default Programming 42
Table 6.1: RS485 Devices 45
Table 6.2: RS485 Device Control features 46
Table 7.2:1: Global System Event Outputs 48
Table 8.2:1: Status Menu Display Fields 52
Table 8.2:2: Status Codes 53
Table 8.5:1: Alarm Events 55
Table 8.5:2: Loop Fault Events 56
Table 8.5:3: System Fault Events 57
Table 8.5:4: Isolate Events 58
Table 8.5:5: System Events 59
Table 9.1:1: Output Type 71
Table 9.2:1: Input and Output Device Types 73
Table 9.2:2: Input Range 73
Table 9.2:3: Logic Gate Output Functions 84
Table 9.2:4: Default Local MCP Input Configurations 87
Table 9.2:5: System Options 89
Table 10.14:1: Power Supply Faults 106
Table 13.1:1: F100A Ordering Information 112
Table 13.2:1: F100A Spare Parts Schedule 114
Table 20.1: Change History 133

1. INTRODUCTION

1.1 Functional Description

The ***Pertronic*** Industries ***F100A*** is an advanced analogue-addressable automatic fire alarm system designed for small to medium sized building applications having up to 400 addressable smoke and heat detectors plus up to 400 Manual Call-Points or modules. The LCD front panel provides a simple menu driven interface to allow control of the Fire Indicating Panel.

The ***F100A*** complies with Australian Standard 4428.1:1998

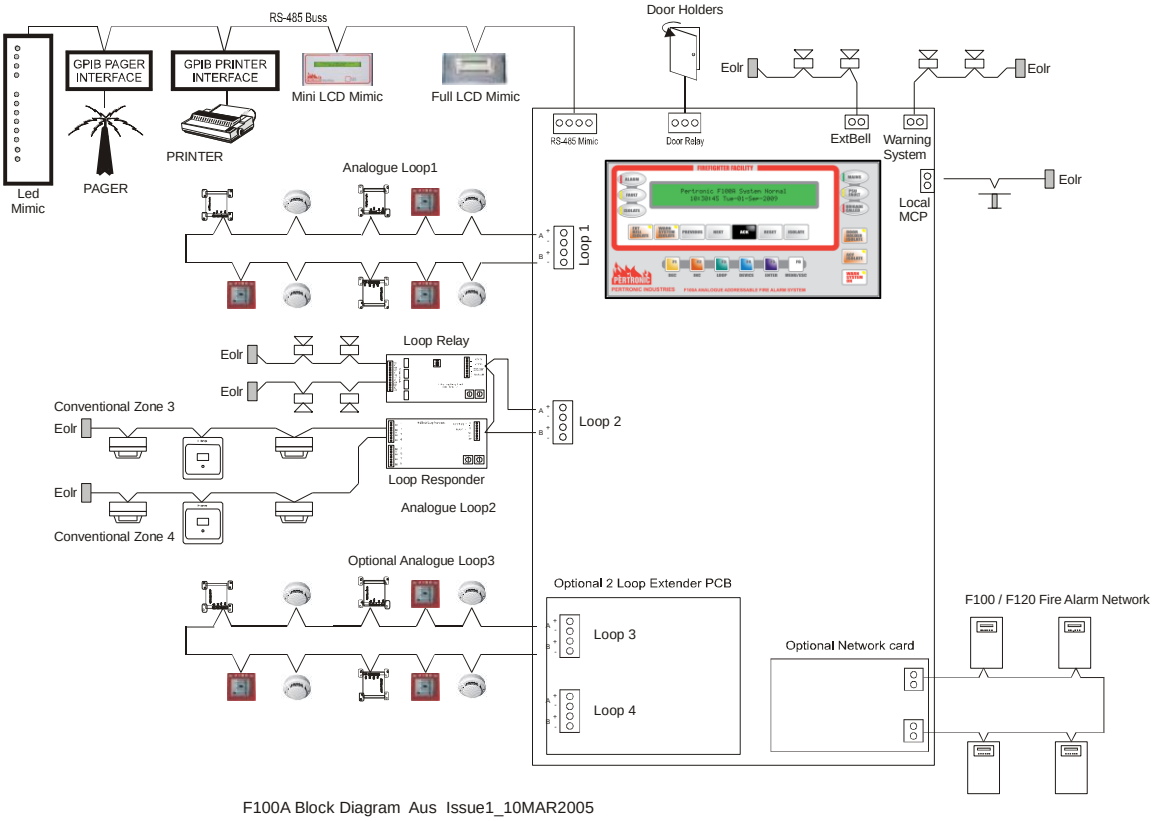

F100A Block Diagram Aus Issue1_10MAR2005

The components and interfaces of a typical ***F100A*** Fire alarm system are shown below:

Figure 1: F100A Block Diagram

1.2 Overview of Features

- The ***F100A*** has comprehensive front panel controls, including the following:
  - Fire-Fighter Facility to AS4428.1:1998
  - Door Holder Isolate- and ACF Isolate control
  - Evacuation (Warn Sys On) Test button
  - Six Menu navigation and control keys
- Configuration data may be entered manually through the front panel controls, or uploaded from a PC.
- The ***F100A*** has two independent analogue-addressable loops, and is expandable to four.

  The loops can accept analogue addressable input- and output devices including relays.
  The loops are short-circuit- and over-voltage protected.
- Input devices include detectors, Manual Call-Points, Loop Responders and standard input modules.

  Each input device (including detectors) can be configured for full Fire system operation or indicator-only operation or to disable any, or all, of Warning System-, External Bell-, or Brigade Call operation

  Each input device can be mapped to activate the onboard relays, DHR (Door Holder) and ACFM.

  Each input device can be mapped to four output functions. An output function can be an LED, a Group, a Loop relay, a Local relay, an on-board Open-Collector output, a Timer, or a Logic function.

  Each input device can be assigned a unique 24-character descriptor.

  Each detector may be assigned up to three virtual devices, each with a different sensitivity level and configuration to enable escalating alarm output. Only the base detector can be Brigade Calling.

  Each detector can be configured to operate at two different sensitivities: Day / Night Mode.

  Each input device can be mapped to multiple Loop Relays, Display LEDs and Detector LEDs.

  Each input device can be mapped to any zone.

  From v5.0, each Zone has alarm, defect, isolate, and isolated alarm mappable outputs.

- Detector LED mapping: version 4.50 firmware and above allow mapping to the LED on analogue detectors. This mapping method can be used to activate local sounders driven off the external LED output on analogue detectors.
- Detector Clean Air and Maintenance level tracking. From version 5.0, all Analogue smoke detectors' CA values are tracked and used to calculate the Pre-Alarm and Maintenance Levels.
- Brigade Latch: version 4.50 firmware and above have a Brigade Latch function. This latching mode for input devices allows normally non-latching detectors to become latching on a subsequent Brigade Call. This may be suitable for situations where non-latching devices trigger a Timer to call the Brigade after a specific time delay. Generally, if the device that initiated the Brigade call is non-latching, the device could reset before the Brigade arrived.
- Group to Group Mapping: version 4.50 firmware and above allow Groups to be mapped via other Groups. There is no limitation on the Group mapping order. This allows flexible mapping methods to be used.

- Addressable loop relays can be configured as ‘Relay’, ‘Warn Relay’, ‘ACF Relay’, or as ‘Door Holder Relay’ type.
- On-board relays for external signalling include two independent monitored BELL relays (Warning System and Extension Bell), Master Alarm (Fire) relay, Fault relay, one monitored relay (ACFM), two non-monitored relays (GP) and Door Holder (DHR) relay.
- 8 active-low auxiliary outputs are available. These may be used to activate external relays, etc.
- From v5.0, Warning System On and Warning System Isolate can be activated by map inputs. (Disabled until configuration utility upgrade.)
- Individual zones or loop input devices may be isolated.
- From v5.0, Zones can be isolated via mapping. (Disabled until configuration utility upgrade.)
- Comprehensive system test functions include Auto-Test on start-up and every 24 hours. Battery Test and testing of each detector for Alarm and Fault are part of the Auto-Test functions. A menu test function enables the display of individual detector analogue values on the LCD display.
- The **F100A** has a 2560-event Historic Event Log. Each event log entry is time-stamped to the second.
- Control inputs include a Local MCP alarm and an External Fault input.
- A door interlock is provided to warn of ‘Off-Normal’ panel control functions when the door is closed.
- Duct Detectors: version 4.50 of F100 firmware allows a Duct Detector to override the Fan Control relay. If smoke is detected in the exhaust / pressurisation duct of a Fan Control system, the Fan is turned OFF. When smoke is no longer present in the duct, the Fan is allowed to turn back ON after a period of 60 seconds. To enable this mode of operation, map the Duct Detector to the required Fan relay.
- A PC or laptop RS232 connection allows the system configuration data to be uploaded or downloaded, and the historical Event Log to be downloaded. This may be done remotely using a modem.
- The **F100A** may be networked with other Pertronic Analogue Addressable panels. Refer to Section 5.7: Network Interface.

1.3 Specifications

Feature	Specification
Cabinet:	600 mm Mk2: 455(w) x 600(h) x 180(d) mm (including MCP) 10U: 555(w) x 530(h) x 215(d) mm (including MCP) 16U: 550(w) x 800(h) x 215(d) mm (including MCP) 28U Slim: 575(w) x 1330(h) x 320(d) mm (including MCP) 28U Deep: 575(w) x 1330(h) x 390(d) mm (including lock) 40U Rack: 575(w) x 1865(h) x 415(d) mm (including MCP) Material: 1.2mm mild steel, powder-coated, Hybrid Cream Wrinkle (Colour code HL532/8160 (RAL9001), Manufacturer: Croda NZ).
Power Supply:	200 - 260VAC, 50Hz, 60 or 200VA Battery charger: 27.4Vdc, 4A (3A continuous) or 12A max, nominal at 20°C. Temperature compensated - 26.4V@ 35°C to 28.2V@5°C. Internal Battery: 24Vdc sealed lead-acid: 6.5Ah to 24Ah. (Automatic 24-Hr Battery Test.)
Quiescent current:	F100A panel only, two loop 119 mA. F100A panel only, four loop 169 mA. - Groups of ten detectors, manual call points or modules 3.5 mA - each Loop Relay 4 mA - each Loop Responder 20 mA For panel in Fault (backlight ON) add 55 mA. For panel in Alarm (relays and backlight ON) add 150 mA.
Earth Monitoring:	'Earth ' may be displayed for earth Faults of less than 5kΩ.
Zone Allocation:	Up to 128 physical zones.
LED Displays:	Up to 255 display LED's.
Detector and Modules:	The ***F100A*** has two analogue-addressable loops, expandable to four loops with a two-loop expander module. Each loop can have up to 99 detectors plus up to 99 (input- or output) modules each addressed 01 to 99. A four-loop ***F100A*** accepts a maximum of 396 detectors and 396 modules. Each detector and module/call point can be associated with a zone (128 maximum) and has four mappable output functions. Each function can be a LED, Loop relay, Group, Pull-down Output, Timer or Logic function. Each device can be configured to activate any of WARN SYS relay, EXT BELL relay, GP relay or ACF relay. Each device can be configured for full fire call, sounders only, brigade-only, indicator-only or invisible operation. Loop short circuit isolators are used to separate the zones within loops. The detectors are tested on start-up and during the 24-hour auto-test. The detectors can be individually tested from the test menu. Detectors and Manual Call-Points may be isolated from the system.
Loop addressing	Each loop provides addressing for up to 99 Detectors plus up to 99 input- or output modules (addressed 01 to 99).

Feature	Specification
Detectors	Up to three Virtual Detectors can be assigned to each physical detector providing a means of escalating an alarm from a single point detector Detector sensitivities are individually adjustable Photoelectric and Ionisation detectors have three (3) sensitivity levels. Heat detectors have four (4) sensitivity levels. Omni detectors have five (5) sensitivity levels. Acclimate detectors have six (6) sensitivity levels. Laser detectors have nine (9) sensitivity levels. If enabled, each detector has separate Day or Night mode sensitivity levels.
Input Types	Input modules are either input modules set as switch input types—such as Manual Call Point, Sprinkler, Fan Controller, Pressure Switch, Flow Switch, Valve Monitor Unit, Sub Indicator Panel, Zone Isolate Switch and Switch—or other input types like a Zone Monitor Unit (M502), Conventional Detector Interface (M512), or Loop responder (LPRS).
Output Types:	There are four types of addressable relay: Relay, Warning System, ACF, and Door Holder.
Loop Characteristics:	Maximum Loop length: 1 km (198 devices) with 1 mm^2 cable. Maximum Loop resistance: 40 ohms total (+ve plus –ve). Conductor Size: 1.0 mm^2 to 2.5 mm^2. Cable Type: Twisted pair cable recommended.
Device Isolation:	Detectors and call points can be individually isolated. Zones may also be isolated.
Fire Relay:	One changeover contact rated at 30Vdc, 2A, normally de-energised.
Fault Relay:	One changeover contact rated at 30Vdc, 2A, normally energised.
WARN SYS, EXT BELL:	Two separate relays, each having monitored outputs (10kΩ end of line) rated at 24Vdc, 5A. The maximum combined sounder load is 1.2A (using the integral power supply). These 2 outputs can be individually programmed.
ACF Relay:	Ancillary relay having a monitored output (10kΩ end of line) rated at 24Vdc, 1.6A, that is normally de-energised. When energized, it provides 24V output, drives a load of up to 1A, and globally responds to ACF ISOLATE.
Battery Fail Relay:	Non-monitored Battery Fail relay. Normally energised. Change-over contacts, de-energises when the battery voltage falls below 20.0V. Rated at 30Vdc, 2A.
GP Relay:	Non-monitored General Purpose relay. Normally de-energised. Two changeover contacts rated at 30Vdc, 2A (from the same relay). Programmed as GP relay.
Door Holder Relay:	Non-monitored Door Holder Relay. Single changeover contact rated at 30Vdc, 5A (requires an external power supply).
Other Functions:	2560-event historical event log. Monitored local MCP alarm input. General-purpose brigade interface AS4428. Ext Bell Isolate, ACF Isolate, Warning System Isolate, Door Holder Isolate. Warn System On test button. Walk Test function. Door interlock micro-switch (logged in the history log).

Feature	Specification
Mimic Port: (External RS-485) (Internal RS-485)	Four-wire +27.4Vdc, 1.6A capability plus A/B data lines +27.4Vdc limited to 500mA. plus A/B data lines
Options:	Conventional circuit interface; LED repeater panel (up to eight addressable repeaters may be connected plus further non-addressable repeaters – max 32); LCD mimic panels (up to eight addressable repeaters may be connected plus further non-addressable repeaters – max 32); Loop responders (8 conventional or switch contact inputs and one relay output); Loop Relay Unit (4 monitored or non monitored outputs); AS1668 Fan controls; PC connection (direct connect or dial in modem); Dataliner, Nursecall, high level ModBus, Printer, Pager Interfaces, and Network options available.
Environmental:	Temperature -5°C to +45°C Humidity +40°C or below, ≤ 95% relative humidity (non-condensing). +41°C to +45°C, ≤75% relative humidity.

Table 1.3:1: Specifications

2. F100A FRONT PANEL CONTROLS AND DISPLAY

The Control Panel of the ***F100A*** allows an operator to perform routine functions such as isolating, testing and resetting alarm inputs and zones, setting the time and date, monitoring system status, and reviewing logged events. The control panel contains a two-line by 40-character LCD display. The display is within the Fire-Fighter Facility (enclosed by a red border), along with push-buttons and LED indicators. Outside the Fire-Fighter Facility are additional engineering controls (push-buttons and LED indicators) for use by the building owner and fire alarm engineers. When an alarm occurs, the ***F100A*** overrides the display to allow viewing the alarm; keys within the Fire-fighter area can then be used by the brigade to Acknowledge, Reset, or Isolate the alarm as required.

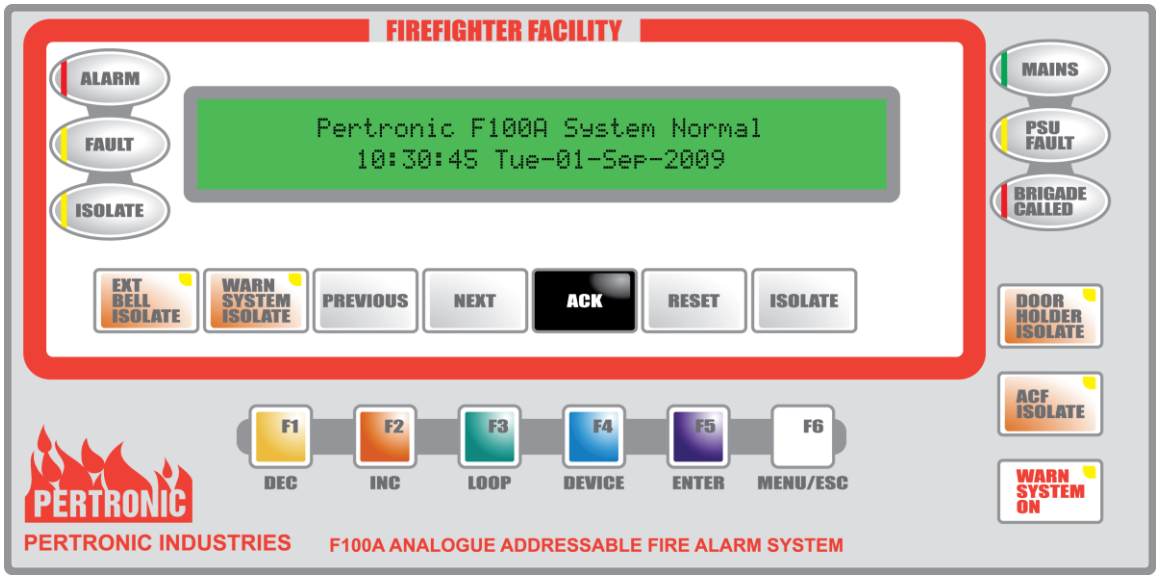

Figure 2: F100A Front Panel

2.1 System Indicators

The ***F100A*** has eleven indicator LEDs on the front LCD Display:

2.1.1 Alarm Indicator LED

A red LED indicating:

OFF the Normal state

Flashing an unacknowledged alarm event is present in the Fire queue.

ON one or more alarm events are in the Fire queue, and all have been Acknowledged.

2.1.2 Fault Indicator LED

A yellow LED indicating:

OFF the Normal state

Flashing one or more Faults are present on the system. A Fault is a situation that prevents the Fire Alarm System from performing its normal functions. Possible Faults include problems in external wiring, faulty detectors, component failure, faulty charger, or low standby battery voltage.

2.1.3 Isolate Indicator LED

A yellow LED indicating:

OFF the Normal state.

ON one or more devices (zones, network inputs or logic functions) is isolated.

2.1.4 External Bell Isolate LED

A yellow LED indicating:

OFF the Normal state

ON indicates that the on-board External Bell Output has been isolated by the External Bell Isolate button.

2.1.5 Warning System Isolate LED

A yellow LED indicating:

OFF the Normal state

ON indicates that the on-board Warning System Output and all loop relays configured as 'Warning System' types have been isolated by the Warning System Isolate button. They will not activate in the event of an Alarm.

2.1.6 Door Holder Isolate LED

A yellow LED indicating:

OFF the Normal state

ON indicates that the on-board Door Holder Relay and any loop relay configured as 'DOOR' has been isolated and is prevented from energising in the alarm condition.

2.1.7 Isolate ACF LED

A yellow LED indicating:

OFF the Normal state

ON indicates that the on-board ACF Relay and any loop relay configured as 'ACF' has been isolated and is prevented from energising in the alarm condition.

2.1.8 Warn Sys ON LED

A yellow LED indicating:

OFF the Normal state

ON indicates that Warning System and External Bells are activated. This function cannot be over-ridden by other functions except the Ext Bell and Warning System Isolate.

2.1.9 Power Supply LED

A yellow LED indicating:

OFF the Normal state, indicating that the F100A's standby battery and its associated charger are both normal

ON indicates that there is a Fault with either the Power Supply system in the F100A or there is a problem with the 240Vac supply to the PSU. This Fault is also generated if the batteries are disconnected or are yet to be fully charged.

2.1.10 Brigade Called LED

A red LED indicating:

OFF the Normal state

ON indicates that a fire signal has been sent to the Brigade-calling device.

2.2 Fire-Fighter Facility

The Fire-Fighter Facility (FF) is enclosed by the wide red border as shown in Figure 2.

Any of the buttons pressed following an event will silence the local buzzer; the actual function for each of the seven buttons is described below.

2.2.1 External Bell Isolate Button

This push-button isolates the External Bell function. When the push-button LED is lit, the External Bell is disabled; when the LED is extinguished, the External Bell is enabled. This has a toggle function: alternate presses of **EXT BELL ISOLATE** will enable or disable the External Bell.

While **EXT BELL ISOLATE** is on, the message displayed on the LCD is like that shown below:

```
External Bell Isol
At: 11:04:06 Tues-03-Sept 2002 SYS:01/01
```

Operation of the controls located at mimic panels will also operate the Ext Bell relays, and they are prioritised the same way as those at the ***F100A*** front panel.

2.2.2 Warning System Isolate Button

This push-button disables the Warning System relay. When the push-button LED is lit, the relay **WARNING SYSTEM** is isolated. **WARNING SYSTEM** is turned off if it was already active. This has a toggle function: alternate presses of **WARN SYS ISOLATE** correspondingly disable or enable the use of **WARNING SYSTEM**.

Note that loop relays configured as 'Warning System' relays are also disabled in the same way by **WARN SYS ISOLATE**.

While **WARN SYS ISOLATE** is active, the message displayed on the LCD is as shown below:

```
Warning System Isol
At: 11:25:16 Tues-03-Sept 2002 SYS:01/01
```

2.2.3 Previous Button

This push-button scrolls current alarms (active and acknowledged alarms) on the LCD display. Each time the button is pressed, the next-oldest alarm is displayed until the oldest alarm is reached. If there are no alarms, current isolates are displayed in a similar fashion; if there are no alarms or isolates, any devices or zones in Fault are displayed similarly.

2.2.4 Next Button

This push-button operates in a similar manner to **PREVIOUS**, except that the next most-recent alarm or other event is displayed each time the button is pressed until the latest alarm is reached. If there are no current alarms, faults, or isolated devices or zones, no action is taken.

2.2.5 Acknowledge Button

The ACK push-button is used to acknowledge the alarm currently displayed on the LCD. If this is the only un-acknowledged alarm on the system, the local buzzer is silenced, and the **ALARM** LED stops flashing but remains lit. If there are remaining un-acknowledged alarms, **ALARM** remains flashing. The ACK button is also used to confirm isolation and reset of devices in the event queues.

2.2.6 Reset Button

This push-button resets the currently displayed detector or Manual Call-Point that is in an alarm state. The ***F100A*** will request that **ACK** be pressed to confirm the reset operation. If this is not done within 10 seconds, or if any other key is pressed, the reset function will be cancelled.
The Reset button can also be used to reset devices or zones in the isolate queue.

2.2.7 Isolate Button

The Isolate button performs the following functions dependent on the event currently on the display. A confirmation is requested within 10 seconds of the isolate operation.

Alarm Queue	Isolating a device in the Alarm queue causes that device to reset from the Alarm state and be removed from the Alarm queue. The device is then placed in the Isolate queue.
Fault Queue	Isolating a device in the Fault queue causes that device to be removed from the Fault queue and placed in the Isolate queue.
Isolate Queue	The Isolate button de-isolates a device or zone when in the Isolate queue. If the device is in Alarm, a warning is given. The device or zone is automatically reset on de-isolation.

2.3 Engineering / Operator Controls

The controls outside the Alarm Acknowledge Facility are for use by the building owner or by service and maintenance personnel. These are shown in Figure 2. The Push buttons along the bottom of the front panel are multi-function buttons, used to navigate the ***F100A*** menu system and also for edit / control options from within the menus.

2.3.1 Decr (F1)

Used as general-purpose edit function to decrement selected values.

2.3.2 Incr (F2)

Used as general-purpose edit function to increment selected values.

2.3.3 Loop (F3)

Press it in the Loop Device Edit or Loop Device Status menu to jump to the first device on the next loop.

2.3.4 Device (F4)

Press this button in the Loop Device Edit or Loop Device Status menu to jump to the next active device on the current loop.

2.3.5 Enter (F5)

Used in various menus and to step to the next event queue when the F100A is displaying the event queues.

2.3.6 Menu (F6)

Used to enter and exit the Menu system.

2.3.7 Door Holder Isolate

This push-button isolates the Door Holder relay and all loop relays configured as 'Door Holder' relays. When the push-button LED is ON, the Door Holder relays are isolated. When the LED is OFF, the Door Holder relays are enabled. This toggle function will correspondingly enable or isolate the door holder relays when pushing Doo**r Holder Isolate**. All door holder relays are de-energised when the 'Door Holder Isolate' function is active.
While **Door Holder Isolate** is on, the message displayed on the LCD is like the following:

```
Door Relay Isolated
At: 11:25:16 Tues-03-Sept 2002 SYS:01/01
```

Operation of the **Door Holder Isolate** located at remote LCD mimic panels will also carry out the Door Relay Isolate function at the ***F100A***.

2.3.8 Isolate ACF

This push-button isolates the ACF relay and all loop relays configured as 'ACF'. When the associated LED is ON, the relays are isolated. When the LED is OFF, the relays are enabled. This has a toggle function: alternate presses of **Isolate ACF** will correspondingly enable or isolate the relays. The relays are de-energised when the 'ACF Isolate' function is active.

While **Isolate ACF** is on, the message displayed on the LCD is like the following:

```
ACF Relay Isolated
At: 11:23:19 Tues-03-Sept 2002 SYS:01/01
```

Operation of the **Isolate ACF** located at remote LCD mimic panels will disable the main PCB **ACF** relay and the loop relays of type ACF.

2.3.9 Warn Sys On

When this function is active (the LED is ON), Warning System and the External Bell are activated. This function cannot be over-ridden by any other operation except the Ext Bell and Warn Sys Isolate. The Isolate function will over-ride the **Warn Sys On** command. This has a toggle function: alternate presses of **Warn Sys On** will correspondingly activate or de-activate the External Bell and Warning System.

2.4 F100 Alphanumeric LCD Display and Menu Functions

The LCD messages are of seven main types: alarm, isolate, fault, general information, start-up dialogue, the user menu dialogue, and the engineer's menu dialogue.

The alphanumeric display has four main display or menu functions:

- Normal display
- Event display
- User menu
- Engineer's menu.

2.4.1 Normal / Date-Time Display

The 'Normal' display functions when the **F100A** system is Normal. The Time and Date are displayed in 24-Hour format, as shown below:

```
Pertronic F100A
Tuesday, 06 March 2007 16:49:21
```

The value of the "user text" can only be set using the Panel Configuration Utility, while the Time and Date must be set from the User's Menu. Refer to Section 8.9 Clock – Set Time and Date.

2.4.2 Event Display and Event when it's sunnyQueues

When an event occurs on the **F100A** system, it is placed into one of four event queues:

Queue	Maximum Displayed (≥v4.56)	Maximum Displayed (<v4.56)	
Alarm:	128	99	Highest priority
Isolate:	128	32	↑
Fault:	256	96	
- Loop & System	(128 Loop + 128 System Faults)	(64 Loop + 32 System Faults)	
System Events:	128	32	Lowest priority
TOTAL	**640**	**259**	

The total number of events "displayed" from v4.56 is increased to 640—the maximum number of events "logged" remains 2560.

An event list that contains current information is deemed to be 'active'. The active event list with the highest display priority is shown on the LCD display. If there is no keyboard activity within 30 seconds and there is more than one item in the list, the display is scrolled to the next list event at 6-second intervals.

An event can be an automatic event such as a 'Fire Alarm' or a 'Fault' condition; or it could be a user-initiated event, such as indicating that 'Walk Test' is in progress, or that 'External bell Isolated' is active.

Alarm Queue: Contains only 'active' and 'acknowledged' alarms. When all alarms have been 'isolated' or 'reset', the 'Alarm Queue' is reset and becomes inactive.

Isolate Queue: Contains details of currently isolated zones, detectors, logic functions, network inputs, or timers.

Fault Queue: Contains all panel Fault conditions, such as ‘Pre-Alarm’, ‘Loop Open’, ‘Battery Disconnected,’ or ‘External Fault’.

The display of Fault events is prioritised: Pre-Alarms, other Loop Faults, and then other System events.

System Events Queue: Displays events such as ‘Door Holder Isolated’ or ‘Walk Test’.

Access Queues with lower priority by pressing **Enter** on the front panel. The display returns to the active queue with the highest priority, after no keyboard activity has taken place within 30 seconds.

When more than one item is in a queue, a message at the top right of the LCD display indicates the position of the displayed message in the queue, and the total number of items in the queue e.g. (for example, ISO:3/5). When there is more that one event in the queue, this indication alternates with the text ‘**more...**’.

The items within a queue may be scrolled back and forth using **PREVIOUS** and **NEXT** in the Alarm Acknowledge Facility.

An optional Call **Engineer** message may be added at the end of the lists. The bottom line of the display (40 characters) is used for service personnel telephone numbers or instruction. An example is shown below:

```
Call Engineer
Fire Installation Co ring 9234-5678
```

This option and text is selected in the Panel Configuration Utilities software package.

2.4.3 General Information Messages

The format for the general Information Messages is shown below:

```
Device(s) Resetting
Press Any key to continue..
```

LCD Message	Occurs
Pertronic F100A System Normal Tuesday, 06 March 2007 16:49:21	Default message when the system is operating normally. The text of this message (40 characters) may be changed using the Panel Configuration Utilities software package.
System Reset Please Wait...	On power-up; when the menu reset is selected; when the last device in alarm has been reset; and when the 'reset non brigade devices' command is received.
Call Engineer Fire Installation Co ring 9234 5678	This optional message is displayed at the end of the event queues if the ***F100A*** is in Fault. The text of this message (40 characters) can be changed using the Panel Configuration Utilities Software.
Door	When the door is closed with the system in an 'Off Normal' state, or the door has been left open for more than 2 hours.
DOOR INTERLOCK	Displayed if the door is closed and the door interlock input on the ***F100A*** Master PCB is open.
In Walk Test	Displayed when the Walk Test mode is in operation.
24 HOUR TEST	When the 24-Hour Test is in progress. This alternates with the normal display message.
Memory Lock Switch Fault	Warning that the ***F100A*** Configuration Memory lock is in the OFF position.
Please Wait... Extra Device Check	Following an exit from the Engineers menu and the ***F100A*** Door has just been closed, or on demand from the Engineers Menu.
Device(s) Resetting Press Any key to continue..	Displayed if a loop device is resetting after an Alarm condition. Press any key to display other events.

Table 2.4:1: General Information Messages

2.4.4 Loop Fault Messages

Loop and system Fault events are displayed in the same queue with loop faults being displayed at the head of the Fault queue.
The general format for this type of message is shown below:

```
 Fault L1D01 (OPT ) Status:ABS
Loc. KITCHEN, LEFT WING        FLT:03/07
```

The example shows that optical detector 1, on loop 1, is absent (missing) and that it is the third out of seven Faults: The 'Status' field can display one of 5 types of Fault (such as ABSent).

2.4.5 Loop Device Alarm Messages

```
* ALARM *  at: FRONT OFFICE
Zone 012 L1M02 Type MCP        ALM:01/05
```

The display shows a Fire Alarm on Loop 1 from a module (Manual Call-Point), at address 02, configured to Zone 12; and its location is at the 'Front Office'. The bottom-right indicates that this is the first alarm message of five alarms. This message alternates with 'MORE'. Also see Section 2.5 Operating the Fire Fighter Facility.

2.4.6 Timer Activation Alarm Messages

This display shows that Timer 1 has been triggered and is counting down, indicating the remaining time period.

```
Timer 01 Running    Count: 03 Min 52 Sec
Loc Smoke Delay              ALM:02/05
```

2.4.7 Timer Complete Alarm Messages

This display indicates that Timer 1 has been triggered, and its timeout period has expired.

```
Timer 01 Complete
Loc Smoke Delay              ALM:03/05
```

2.4.8 Gate Activation Messages

This display indicates that Gate 1 input conditions have been met, and it is activated.

```
Gate 01 Activated
Loc. Dual Smoke Override       ALM:04/05
```

2.4.9 Device Fault Messages

A typical display for a device in Fault is shown below:

```
 Fault L3D30 :ION Status: ABS     Zone 001
Loc. KITCHEN, LEFT WING        FLT:03/07
```

2.4.10 System Fault message

This display indicates that a detector (ionisation type), located on Loop 3, with address 30, has a Fault (is ABSent). The detector is located at the 'kitchen' in the 'left wing' of the building.

System Fault Messages

Loop and system Fault events are displayed in the same queue with loops being displayed at the head of the Fault queue.
The general format for this type of message is shown below:

```
Warning System Fault
At: 11:42:06 Wed-11-Sep 2002   FLT:01/01
```

This example indicates a Fault on the Warning System circuit, and when it was found and logged.

Fault Message	Description
ACF Fault	Main PCB ACF output monitoring Fault (10kΩ End Of Line resistor).
Warning System Fault	Main PCB Warning System output Fault (10kΩ End Of Line resistor).
External Bell Fault	Main PCB External Bell output Fault (10kΩ End Of Line resistor).
Battery Fail/Missing	The battery is missing (checked every 10 seconds) or the battery voltage is below 22.4V
Battery Low	The battery voltage is less than 24.0V or fell below 24V during the 24 hour test
Charger Volts High	The Charger voltage is greater than 28.5V
Charger Volts Low	The Charger voltage is less than 25.4V
Mains Failure	The door is closed when the mains is not connected, or the mains has been lost for more than 1 hour
Rom Crc Error	Program ROM checksum error
Config Crc Error	System configuration checksum error
Loop x Break	Loop break on loop x
Loop x Short	Loop short circuit on loop x
LCD Mimic x Fault	Fault at LCD mimic address x. Address 0 is panel LCD
LED Mimic x Fault	Fault at LED mimic address x
LED Mimic x Int Flt	LED mimic address x internal
LCD Mimic x Missing	LCD mimic address x missing
LED Mimic x Missing	LED mimic address x missing
Extra LCD Mimic x	Unprogrammed LCD mimic, address x
Extra LED Mimic x	Unprogrammed LED mimic, address x
Int Loop Driver Fault	Internal loop driver not responding
Ext Loop Driver Fault	Extender pcb loop driver not responding
Door Interlock Fault	Door interlock input open as door closes
Display Timeout	The main PCB has stopped polling the keyboard/ display assembly

Table 2.4:2: System Fault Messages

2.4.11 Loop Device Alarm in System queue:

This display indicates that a module configured as a switch has operated on Loop 2, address 01.

```
**INPUT**  at: Smoke Delay Switch
Zone 012 L2M01 Type: SWCH     SYS:05/05
```

Alarm Events	
Event Type	**Event Description**
Alarm	A loop input device is in the Alarm state.
Ack'd Alarm	The Alarm on a loop input device has been acknowledged.
Local MCP Activation	The Local MCP Input on the motherboard has been activated.
Test Alarm	A loop input device is in its Alarm state, after activation by the alarm test menu or walk test functions.
Timer xx Running	Timer xx has been started, where xx is one of the 16 programmable timers.
Timer yy Complete	Timer yy had been started and its timeout period has been reached, where yy is one of the 16 programmable timers.
Gate zz Activated	Gate zz input conditions have been met and it is Active, where zz is one of the 32 programmable gates.
Network Input zz Alarm	Net Input zz has activated. The F100A has 64 programmable Network Inputs. See Section 9.2.7.3. Net – Network Edit

Table 2.4:3: Alarm Events

2.4.12 Loop device Isolated Display

A display for a device that has been isolated would appear as shown below:

```
Device  L1M07 (ZMU  ) Zone 002 ISOL NORM
Loc.    KITCHEN, LEFT WING   ISO:01/12
```

This display shows that the Manual Call-Point or module with address 7 on loop 2 has been isolated and that its state is normal. It is the first of 12 devices or zones which have been isolated.

2.4.13 Zone Isolation Display

A typical display for zone isolation is shown below:

```
Zone 001   Isolated ALARM
Loc.       Factory 1        ISO:02/12
```

This shows that Zone 1 is isolated and that a device within that zone is in Alarm. It is the second of 12 devices or zones in isolation.

2.4.14 Timer Isolation Display

A typical display for Timer isolation is shown here:

```
Timer[01] Isolated
Loc.     Smoke Timer          ISO:03/12
```

This shows that Timer 1 is isolated and that it is the third of twelve devices or zones in isolation

2.4.15 Gate isolation Display

A typical display for gate isolation is shown below:

```
Gate[01]  Isolated
Loc.     Dual Smoke Override   ISO:04/12
```

This shows that Gate 1 is isolated and that it is the fourth of twelve devices or zones in isolation.

Isolate Events	
Event Type	**Event Description**
Device Lx Dyy Isolated	Detector at Loop x Address yy has been isolated.
Device Lx Myy Isolated	Module or Relay at Loop x Address yy has been isolated.
Local MCP Input Isolated	The Local MCP Input on the motherboard has been Isolated.
Zone xxx Isolated	Zone xxx (0001 to128) has been isolated.
Timer xx Isolated	Timer xx (01 to 16) has been Isolated
Gate xx Isolated	Gate xx (01 to 32) has been Isolated
Net xx Isolated	Network Input xx (01 to 64) has been Isolated

Table 2.4:4: LCD Isolation Event Messages

2.4.16 System Event Message

A typical display for a system event would appear as shown below:

```
ACF Relay Isolated
At: 11:25:16 Tues-03-Sept 2002 SYS:01/01
```

System Events	
Event Type	**Event Description**
Door Relay Isolated	The Door Holder relays have been isolated by the Door Holder Isolate push-button on the front panel.
LCD mimic xx Ebco	The **Silence Alarms** key switch on LCD mimic xx has been operated.
LED mimic xx Ebco	The **Silence Alarms** key switch on LED mimic xx has been operated.

System Events	
Event Type	**Event Description**
LCD mimic xx Evac	The Evacuate switch on LCD mimic xx has been operated.
LED mimic yy Evac	The Evacuate switch on LED mimic xx has been operated.
Bells Muted	The ***F100A*** Bells Mute function was triggered
Memory lock Switch Off	The Configuration Memory Lock Switch is open.
Door Interlock Fault	The ***F100A*** or Mimic door was closed with Door Interlock input open.
LCD mimic Door interlock	The ***F100A*** Main Panel Door was closed with one or more of the remote LCD Mimic Doors open.
Warning System On Operated	The panel- or an external **Warn Sys On** Button was operated
DayTimer xx Active	DayTimer number xx is active.
Silence Alarms Active	The panel or an external **Silence Alarms** button is operated.
Warning System Active	The Warning System has been activated by mapping
System Warning Sys Isol Active	The Warning System has been isolated by mapping

Table 2.4:5: LCD System Event Messages

2.4.17 User Menu Operations

The User Menu is used for selecting functions such as 'reset', or for selecting further menus such as the 'isolation menu'. The User Menu is reached by pressing **F6** (Menu). The display then appears like that below:

```
                User Menu            Reset  Status
Log   Isol   More  Exit
```

For further information on the User Menu and its functions, refer to **Section 8**. Operating the User Menu.

2.5 Operating the Fire-Fighter Facility

For information on the controls and indicators on the ***F100A*** front panel and the Fire-Fighter Facility in particular, refer to Section 2, ***F100A*** Front Panel Controls and Display.

The Fire-Fighter Facility highlights alarm(s) and provides keys for alarm control. The layout of the Alarm Acknowledge Facility (AAF) is shown below:

Figure 3: Fire-Fighter Facility

2.6 Devices in Alarm – Acknowledge, Reset, and Isolate

2.6.1 Alarm Types – 'Inputs' and 'Alarms'

Alarms can take two forms—'Inputs' and 'Alarms'.
An 'Input' type alarm is generated when a loop input is configured to be displayed in the Status Queue. Alarms of this type will display the following text at the top-left portion of the LCD display:

**** INPUT ****

The 'Alarm' type is generated if the input is setup to be displayed in the Fire List. Any device that is programmed to be brigade calling—the Fire relay option is set—will automatically be set to display in the Alarm List. Modules programmed as MCPs will only be displayed in the Alarm List. Alarms of this type will display the following text at the top-left portion of the LCD display:

**** ALARM ****

2.6.2 Alarms Display

When an alarm occurs, the **ALARM** LED is illuminated, the internal sounder is activated, and the relays corresponding to the device configuration are activated. The LCD displays a screen like the following example:

```
** ALARM **  at: FRONT OFFICE
Zone 012   L1M02   Type: MCP   ALM:01/01
```

The display indicates that the Manual Call-Point on loop 1 with address 2 is in Alarm. Note that the portion of the display showing at the bottom-right corner of the display—**ALM:01/01**—indicates that it is the first message of one, and that no other 'Fire' conditions exist on the system.
If further alarms activate, the original or first alarm will remain on the display, but the message field changes to reflect the total number of alarm messages and alternates with the text '**MORE**. If 3 more alarms occurred to bring the total alarms to 4, the message field would read **ALM:01/04** and would alternate with the text **MORE**.

The list of alarms is called the Alarm List. Up to 128 alarms can be entered in the list.
When the fire-fighter arrives at the ***F100A*** in response to an alarm, the local buzzer can be silenced by pressing any button. Any new alarm will re-activate the local buzzer. The Ext Bell can be silenced by pressing the **Ext Bell Isolate** button. This will silence the Ext Bell and the local buzzer and will not re-activate unless the Ext Bell Isolate is de-isolated.

Multiple Alarm messages may be scrolled using the **PREVIOUS** and **NEXT** push-buttons. For example, if the **ALM: 01/04** message is displayed, pressing **NEXT** will display the message **ALM: 02/04.** Pressing **NEXT** again will display the message **ALM: 03/04**. Two more presses of **NEXT** will scroll the display through **ALM: 04/04**, and back to **ALM: 01/04**. Similarly, **PREVIOUS** will scroll the alarms forward through the display.
Further alarms are displayed on the LCD display, and **ACK**, **RESET**, or **ISOLATE** must be pressed to acknowledge each alarm.

Once an alarm has been acknowledged, its position on the Alarm List is retained, and the acknowledgement for that device is displayed and looks like the example below:

```
Ack'd  ALARM   at:  FRONT OFFICE
Zone 012   L1M02   Type: MCP   ALM:01/04
```

After an alarm has been acknowledged, the display reverts to the first unacknowledged alarm. Note that when more than one event is in a list, the text **MORE** flashes alternately with the bottom right-hand indication of the number of events and the position of the displayed event in the list.
The devices in Alarm may be reset by scrolling through the Alarm List until the device to be reset is displayed on the LCD. Press **RESET**. The following message is displayed:

```
ALARM at: FRONT OFFICE
   PRESS ACKNOWLEDGE TO CONFIRM RESET
```

Press **ACK** and the device will be reset. If that device does not revert to the Alarm state, it is removed from the Alarm List.
In a manner similar to the Reset operation, a device in Alarm may be isolated. To do this, select the device in Alarm to be isolated on the LCD display, and press **ISOLATE**. The user will be prompted to acknowledge the request by pressing **ACK**. The isolated device is removed from the Alarm List and placed in the Isolate List. The display will appear like the following:

```
Device L1M07 (MCP) Zone 002 ISOL NORM
Loc. KITCHEN, LEFT WING      ISO:02/12
```

When a device is isolated, the alarm indicator on the device remains illuminated to enable the fire engineer to find the device. **RESET** may be used from the Isolate List display to reset devices that have been isolated, but remain in the Alarm state.

2.6.3 De-Isolating Devices

Devices in isolation can be de-isolated using the Isolate pushbutton.
When the device isolated message is displayed, it will appear as shown below:

```
Device L1D33 (HEAT) Zone 002 ISOL NORM
Loc. KITCHEN, LEFT WING      ISO:01/01
```

To de-isolate, press the **ISOLATE** key. A message will be displayed requiring confirmation of this action, as shown below:

```
Device L1D33 (HEAT) Zone 002 ISOL alarm
    PRESS ACK TO CONFIRM De-Isolate
```

If the device to be de-isolated is in Alarm, a warning is shown:

```
 ** Warning ** L1D33 IS IN ALARM
      PRESS ACK TO CONFIRM DEISOLATE
```

To continue de-isolation press the **ACK** button. The ***F100A*** will attempt to reset the device or zone in question on de-isolation.

Please Note: For F100 firmware v4.56 or greater, the Device Descriptor text alternates every few seconds with the Zone Descriptor—provided the device descriptor doesn't start with a <blank> before the first character. If it does start with a <blank>, only the Device descriptor is displayed.

2.7 Buzzer Disable Switch

Display hardware ≥ 1.21 and display firmware ≥ 1.12 feature a switch and associated LED (at the back of the PCB) to optionally allow disabling the panel buzzer during testing or commissioning.

When the buzzer is disabled the LCD displays:

```
Service Mode

Buzzer Disabled
```

at 5 seconds intervals and the LED associated with the buzzer is lit.

Display hardware ≥ 1.21 and display firmware ≥ 1.14 feature a switch and associated LED (at the back of the PCB) to optionally allow disabling the panel buzzer during testing or commissioning.

When the buzzer is disabled the LCD displays:

```
Service Mode

Buzzer Disabled
```

at 10 second intervals and the LED associated with the buzzer is lit.

Additionally, the “Service Mode Buzzer Disabled” message is suppressed if any keystrokes are made and is suppressed for 10 seconds after the last key stroke.

** IMPORTANT NOTE:

It is the user’s responsibility to ensure that the Buzzer Service mode switch is not set to disabled when closing the Panel or Mimic door.

3. SYSTEM STARTUP

When the ***F100A*** is powered-up or reset using the micro-switch, the system enters a start-up procedure.

3.1 Start-up Procedure

This consists of the following stages:

3.1.1 Stage 1:

After power-up the ***F100A*** waits 8 seconds to enable the loop power to be applied and the detectors to stabilize. During this time the number of loops available is checked, the system configuration is loaded, and the loops checked for extra devices. The initial displays include the following:

```
Pertronic F100a Australian Version
Pertronic F100a Australian Version
```

```
Pertronic Industries F100A+  vMJ.MI.DE.C
Start up... Found x Loops
```

The letters above represent the following:

- **MJ** is the firmware major version number,
- **MI** is the firmware minor version number,
- **DE** is the firmware development version number, and
- **C** is the firmware version variant.
- **x** is the number of loops found at start up. If no loops are found, ER is displayed.

The message **Found 2 Loops** is replaced by **Loading Config** when the configuration is being loaded from memory and when the memory CRCs are being checked. When completed, **Extra Device Check** is displayed while the loops are checked for extra devices.

3.1.2 Stage 2:

The ***F100A*** then displays the detector and module count according to the configuration set up and stored in the ***F100A*** memory, as shown below:

```
Detectors on L1:nnn L2:nnn L3:nnn L4:nnn
Modules   on L1:nnn L2:nnn L3:nnn L4:nnn
```

nnn indicates the number of detectors or modules for each loop (maximum 100 of each type per loop). The counts are displayed for 5 seconds.

3.1.3 Stage 3:

The detectors that have been configured and programmed in the ***F100A*** are then tested by simulating an alarm condition at each detector in turn.

3.1.4 Stage 4:

If there are no start-up errors, the display shows the following:

```
Pertronic F100A System Normal
9:28:45 Tue-27-Aug 2002
```

Otherwise an error condition is displayed.

3.2 Start-Up Errors

3.2.1 Loop Device Faults

Loop Device errors are placed into the top 32 locations in the Fault list. The Loop Number, Device Type, Device Address, and Fault Type are displayed on the LCD, as shown:

```
 Fault L3D81 : OPT   Status:ABS
Loc. LIBRARY, LEFT WING       FLT:03/04
```

The Fault types that may occur are shown in the table below:

Display	Description
ABS	Device Absent (missing)
FLT	Device Fault: device is communicating but has a Fault condition.
TYPE	Type Mismatch
PRE	Pre-Alarm
ADDR	Double Address
NoCfg	No Configuration
RST	Loop Responder Watchdog Reset
ISLR	Loop Responder Isolator Operated
PSU	Loop Responder Power Supply
HI	Loop Responder Datum High
LO	Loop Responder Datum Low
SHORT	Loop Responder Input Short-Circuit

Table 3.2:1: Loop Device Fault Type Descriptions

3.2.2 Detector Alarm Test Failures

If failures are detected during the detector alarm tests, a message is displayed on the LCD for 5 seconds:

```
Device Test Failure
```

Each Fault is recorded in the Event Log.

4. ADDRESSABLE DEVICES

Each of the two-wire analogue-addressable loops accepts addressable devices, which include smoke detectors, heat detectors, manual call-points, monitor modules, loop responders, output modules, and loop relays. A mix of device types may be used.

For each loop, the ***F100A*** uses addresses 00 to 99 for the devices, as selected by the rotary address switches on the devices. The LCD display messages precede an address with **D** for detectors or **M** for modules.

A maximum of 200 devices may be installed on each loop (100 detectors maximum plus 100 modules maximum). Each detector or module must have a unique address. No two detectors may have the same address; similarly, no two modules may have the same address—detectors and modules may have the same numerical address since they are distinguished by the prefix D or M. For purposes of device labelling, the numbering system shown in Figure 4 is recommended. The detector and module addresses normally start at address 01.

The ***F100A*** detects short-circuit and line-open loop Faults by performing a continuity test before each poll sequence. Loop isolators are used between zones to prevent more than one zone being lost in the event of a loop short-circuit. Figure 4 shows how isolators are placed in a multi-zone loop.

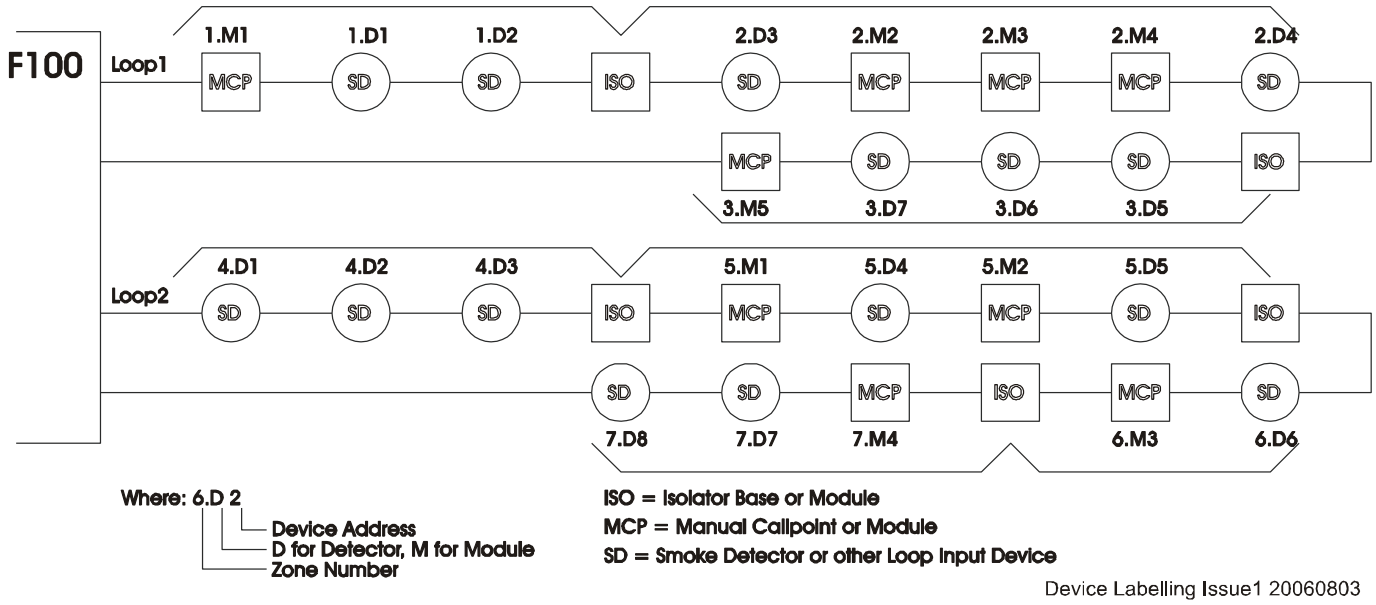

Figure 4: Device Labelling

4.1 Drift Compensation

Smoke detector Drift Compensation is the process of dynamically adjusting the alarm thresholds of a smoke detector to provide a constant sensitivity, regardless of detector contamination over time. On the F100, Drift Compensation is limited to compensating the detector's Pre Alarm level—the Alarm Level remains fixed. Recent models of System Sensor detectors—except for the Photo, Ion and Beam — have this function built into the detector itself.

The **F100** maintains a **Clean-Air** (CA) value for each smoke detector. The CA value represents the "background" level of contamination in the detector chamber caused by dust or other contaminants. This is a very slowly changing value, which tracks the detector's

current analogue level over time. The CA value and the detector's sensitivity setting are combined to calculate the detector's **PreAlarm Level** (Pre). This is the analogue value above which a 'Pre-Alarm' will be triggered. The Pre Alarm Level is 67 % of the distance between the current Clean Air Value and the Alarm Level. Drift Compensation is performed only on the Photo, Ion and Beam device types; the intelligent Acclimate, Laser, COPTIR/PTIR and FAAST devices perform internal drift compensation.

Ultimately, the detector becomes so contaminated that the adjustments for the selected sensitivity cannot be maintained because the detector's alarm level would have to be raised above the saturation level for the detector. For this reason, a fixed threshold for the CA is used to determine whether the detector has reached a contamination level that requires the head to be cleaned and/or replaced.

Figure 4.5.1: Drift Compensation Overview shows the relationship over time between the 'Alarm' level, the 'Clean-Air' level, and the internal 'Maintenance Fault' threshold.

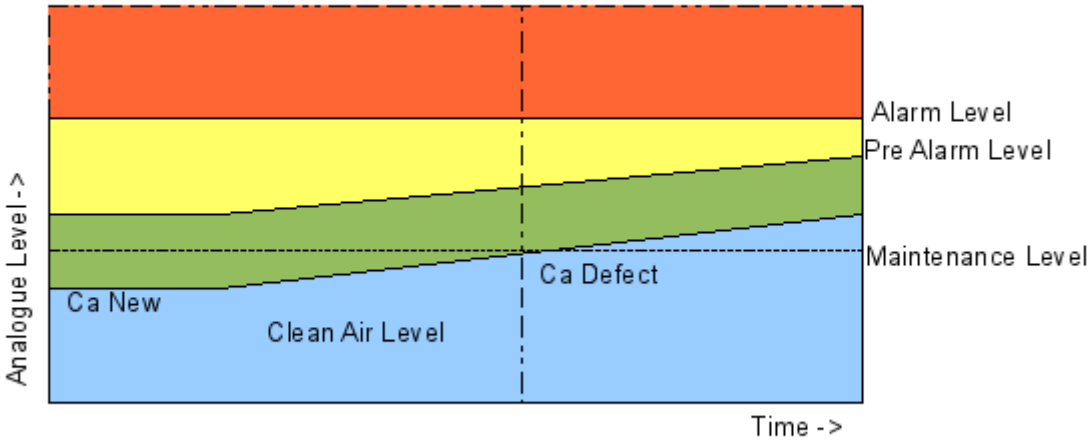

Figure 4.5.1: Drift Compensation Overview

4.2 Detector Alarm Sensitivity Levels

For each detector, the loop driver has an 'Alarm Level' which represents the PW4 level that must be reached before the detector is recognised as being in Alarm. Each Level corresponds to a sensitivity level set within the Loop Driver.

The Photo, Ion and Heat detectors have PW4 levels that vary as the sensor level varies. The F100 can, therefore, use any value to set as an 'Alarm Level'. Pertronic uses this feature to provide a number of sensitivity levels as defined in Table 4.6.3.

The Laser, Acclimate, and Beam detectors have fixed 'Alarm' levels specified by System Sensor. Refer to Table 4.6.3.

4.3 Pre-Alarm Sensitivity Levels

Most detectors also have a Pre-Alarm Level. For the Ion, Heat, and Photo detectors, this is calculated as 67% of the difference between the nominal 'Clean-Air' value and the 'Alarm Level'.

For the Laser, Omni, and Acclimate, the Pre-Alarm Level is calculated as the 'Alarm Level' Number minus one. For example, if the Alarm Level is 8, then the Pre-Alarm level is Alarm Level 7.

There is no Pre-Alarm level for Alarm Level 1 because there is no higher sensitivity.

4.4 Maintenance Level

All detectors, whether Drift Compensated or not, arrive at a point where the chamber becomes so dirty that there is a significant increase in detector sensitivity. Before this state is reached, a 'Maintenance Alarm' event is generated.

Detectors with internal Drift Compensation generate a maintenance signal internally; but for Photo, Ion and Beam detectors, the F100 tracks the PW4 value to determine if it has drifted from the normal operating range.

Smoke detector PW4 values are sampled and averaged over time to calculate the 'Clean-Air' (CA) value and to determine whether a 'Maintenance Alarm' exists. The CA value represents the long-term baseline detector level under 'Normal' conditions. The CA level slowly tracks the PW4 value of the detector, so is immune to any transient conditions affecting the device. CA is averaged and adjusted every 24 hours.

At F100 start-up, or after a missing detector condition has been restored, the CA value assumes the value of PW4 after the detector has reached a stable level — 180s after detector power-up.

Laser, Acclimate, COPTIR and FAAST detectors have internal drift compensation. This provides a steady PW4 level, even when the detector is nearing its compensation limit. When the PW4 value exceeds its drift limit, the detector abruptly changes its PW4 value to a predetermined level to indicate that maintenance is required. This method has the disadvantage that the service agent does not know how dirty a detector is by looking at its PW value. There is no method for predicting when a detector will fail.

Heat Detectors do not have a maintenance level, as their PW4 can drift beyond the 'Normal' range due to normal ambient temperature fluctuations.

4.5 Low Fault Signal

PW4 may drift below the 'Normal' operating range raising a 'Low Fault' when it drops below 10% of the 'Normal' range. This is not a maintenance fault because a low PW4 usually signifies a faulty, not a dirty detector.

4.6 Selecting Detectors for Maintenance

Selecting the detectors to clean depends upon a number of factors:

- The sensitivity at which a particular detector is configured—the higher the sensitivity, the lower the Alarm level and the sooner and more often the detector must be cleaned
- The 'Clean Air' value of the detector as measured by the F100—the higher the CA value, the sooner the detector should be cleaned
- The relative 'cleanliness' of the area in which the detector is installed—the 'dirtier' the area, the sooner and more often the detector must be cleaned

From the F100 menu select: STATUS, then Press Enter to cycle through the Current Level, Pre Alarm Level, Alarm Level, Clean Air Level, Maintenance Level, and Raw PW4 Level.

```
L1D02 :OPT   1% Alm(30)   STAT:NORM
Zone:001 Loc: Main Corridor
```

0% Alm(30)	The current analogue level expressed as a percentage of alarm, and in parenthesis the analogue count (as used in previous versions)
Pre 1648 uS	The Pre Alarm Level threshold in microseconds
Alm 2000 uS	The Alarm threshold in microseconds
Ca 960uS	The 'Clean-Air' value calculated during the preceding 24 hour period, in microseconds
Mt 1328uS	The Maintenance Defect threshold, in microseconds
pw4 976 uS	The current 'raw' PW4 value of the detector in microseconds

As a general rule, clean all detectors whose 'Clean-Air' value is greater than 1200.

The analogue-addressable detectors used by the ***F100A*** and the corresponding Type designators are shown in the table below:

Detector	Designator
System Sensor 2251/2251BPI Photoelectric smoke detector	**OPT**
Virtual Optical Detector	**vOPT**
System Sensor 1251/1251BPI Ionisation smoke detector	**ION**
Virtual Ion detector	**vION**
System Sensor 5251RP/5251RBPI Rate of Rise heat detector	**HEAT**
Virtual Heat detector	**vHEAT**
System Sensor 5251P/5251BPI Fixed Temperature heat detector	**HEAT**
Virtual Heat detector	**vHEAT**
System Sensor 3251 Multi-sensor (Omni) detector	**OMNI**
Virtual Omni Detector	**vOMNI**
System Sensor 7251 Laser Detector	**LASR**
Virtual Laser Detector	**vLASR**
System Sensor FAAST Aspirating smoke detector	**FAST**
Virtual FAASST Detector	**vFAST**
System Sensor 2251TMBPI/2251TLE/2251CTLE detectors	**ACLM**
Virtual detectors for above	**vACLM**
System Sensor 6500S Beam detector	**BEAM**
Virtual Beam Detector (do not use)	**vBEAM**

Table 4.6:1: Analogue-Addressable Detectors

Two levels of detection are implemented for the detectors. When the pre-alarm level is reached, a Fault is generated; and when the second level is reached, an Alarm is generated. Detectors can be configured to have one out of a range of sensitivities, see Table 4.6.3: Detector Sensitivity Levels.

The Omni detector can be configured to have one out of a range of five sensitivities.

The Acclimate, PTIR, and COPTIR Detectors can be set to one of 6 sensitivities with levels 1 to 5 smoke mode, while sensitivity 6 being Heat Alarm mode **only**.

The Laser detector has 9 sensitivity levels.

With the beam detector only having one sensitivity level, 'virtual beams' have no function.

F100A master software version 4.50 has a virtual detector mode; this is compatible with all the detector types, virtual detectors having the same range of sensitivity as their parent detectors. For example, a virtual laser detector has 9 sensitivity levels, while a virtual Optical has 3 levels, and a virtual Acclimate has 6 levels.

F100A firmware version v4.50 and above has a Day/Night mode option available; each detector has separate day and night mode sensitivities, the day and night mode levels being individually adjustable. The F100 day/night mode is controlled by mapping to local output 16 - night mode. When night mode is active, the night mode sensitivity levels are used as the alarm levels; when night-mode is off or day/night mode is disabled, then the day-mode sensitivity levels are used.

Any of the parameters can be set for detectors via menu functions.

Parameter	Value	Description
Descriptor	24-character	A 24-character descriptor can be assigned to each detector. This descriptor is used when displaying an event associated with the detector on the LCD display. Both the detector and zone descriptors are normally used on the display. If the device has no descriptor assigned, the zone descriptor only is used, otherwise the "Loc:" field is left blank.
Zone Number	1 to 128 (or zero (0))	A number which corresponds to a physical zone area in the building. (zero (0) provides no assignment)
Sensitivity (Day) Sensitivity (Night)	1 to 9	The number of levels available depends on the device type. The sensitivity value is set to the maximum (1) by default. The higher the setting, the lower the sensitivity. Night Mode allows each detector to have a secondary sensitivity that is used when Night Mode is active (refer to Sections 9.1.7.9: Loc[16] Night Mode; 9.2.1.6.1: Day/Night Sensitivity and **Error! Reference source not found.**: **Error! Reference source not found.**).
Configuration Flags	Latching	If a detector is set as 'latching', the 'Alarm' condition is latched by the **F100A**, otherwise the output follows the state of the detector.
AVF	OFF or ON	This option sets the 'Alarm Verification Facility' for a detector. If the detector goes into 'Alarm' within the verification period of the first activation and AVF is set, the **F100A** signals the appropriate 'Alarm' condition for that detector. The verification period is 120 seconds.
	Warning System Extension Bell	Setting 'Warning System' or 'Extension Bell' flags to ON accordingly activates **Warning System** or **Extension BELL** relays when the detector is in 'Alarm' condition. When **SILENCE ALARMS** is active, the relays are isolated and the BELL outputs de-activate.
	ACF	Selecting ACF activates the **ACFM** relay when the detector is in 'Alarm' condition. If **ACF Isolate** is ON, any ACF relays are disabled.
	Door	When set, the Door Holder relay activates when the detector is in 'Alarm'. If the Door relays are isolated (Door Holder Isolate), the Door relays do not activate.
	Fire	With Fire set, the Fire relay activates in the 'Alarm' state activating Brigade signalling and relay change-over contacts.

Parameter	Value	Description
	GP Relay	When GP Relay is set, the GP Relay activates in the 'Alarm' state. This relay has two sets of clean change-over contacts.
	Fire Queue	When set, an 'Alarm' is logged in the 'Fire' queue.
	Buzzer	When set, the local Buzzer sounds. Pressing any front panel key silences the Buzzer. If the 'Alarm' is reset and a subsequent 'Alarm' occurs, the Buzzer sounds again.
	Brigade Latch	Non-latching until the Brigade is called, at which point the detector behaves as though the Latch is set.
Output 1 - 4	Selectable	LED, Loop Device, Group, Timer, Gate or Local Output

Table 4.6:2: Device Parameters

Type	Level	Low Defect	Maintenance Level	Pre Alarm (CA 800)	Alarm			
		PW4 µS	PW4 µS	PW4 µS	PW4 µS	Status PW4	Obscuration/ Temperature	
							%ft	%m
OPTICAL	1	<480	1328	1600	2000	63	1.8	5.5
	2		1424	1760	2192	69	2.2	6.7
	3		1568	1936	2496	81	2.7	8.2
ION	1	<480	1392	1600	2000			
	2		1408	1616	2032			
	3		1456	1680	2128			
HEAT ■ See Note #1 at end of table.	1	<400	None	1850	2000	63	63°C	
	2			2000	2200	75	70°C	
	3			2200	2400	88	78°C	
	4 ■			2470	2650	100	85°C ■	
OMNI	1	<192	240-352	-	1280	40	0.8	2.4
	2			1280	1648	52	1.5	4.6
	3			1648	1968	62	2.2	6.7
	4			1968	2400	75	2.9	8.8
	5			2400	2800	88	3.6	11.0
ACCLIMATE	1	<192	240-352	-	1280	40	1	3.3
	2			1280	1648	52	1-2	3.3-6.6
	3			1648	1968	62	2	6.6
	4			1968	2400	75	2.-3.5	6.6-11
	5			2400	2800	88	3.5	11.0
	6			-	3200 Heat alarm only	100	60^0C Heat alarm only	
PTIR ❖ See Note #2 at end of table.	1			-	1280	40	1.0	3.3
	2			1280	1648	52	2.0	6.6
	3			1648	1968	62	3.0❖	9.8❖
	4			1968	2400	75	3.0❖	9.8❖
	5			2400	2800	88	3.0❖	9.8❖
	6			-	3200 Heat alarm only	100	60°C Heat alarm only	

Type	Level	Low Defect	Maintenance Level	Pre Alarm (CA 800)	Alarm			
		PW4 µS	PW4 µS	PW4 µS	PW4 µS	Status PW4	Obscuration/ Temperature	
							%ft	%m
COPTIR ❖ See Note #2 at end of table.	1			-	1280	40	1.0	3.3
	2			1280	1648	52	2.0	6.6
	3			1648	1968	62	3.0	9.8
	4			1968	2400	75	3.0❖	9.8❖
	5			2400	2800	88	4.0❖	13.1❖
	6			-	3200 Heat alarm only	100	60°C Heat alarm only	
LASER	1	<192	240-688	1168	1280	40	0.02	
	2			1280	1440	45	0.03	0.09
	3			1440	1728	54	0.05	0.15
	4			1728	1840	58	0.10	0.30
	5			1840	2046	64	0.20	0.60
	6			2046	2288	72	0.50	1.5
	7			2288	2512	79	1.0	3.0
	8			2512	2640	83	1.5	4.6
	9			2640	2928	92	2.0	6.0
BEAM	1	<480	1792	1792	2400	75	-	
FAAST	1	<150	-	-	1280	80	Alert†	
	2				1648	103	Action 1†	
	3				1968	123	Action 2†	
	4				2400	150	Fire 1†	
	5				2800	174	Fire 2†	

■ Note #1: Do not use Heat Detector sensitivity 4 with panel software versions <4.56.

❖ Note #2: Different delays built into the detectors differentiate these settings.

† Note #3: See 4.6.1 below

Table 4.6.3: Detector Sensitivity Levels

4.6.1 FAAST Sensitivities

The FAAST has 5 named alarm threshold values that are locally assigned to the device via the PipeIQ configuration software as follows:

Alarm Level	Default Threshold %/ft	Programmable Range %/ft	Default Threshold %/m	Programmable Range %/m
Alert	0.012	0.00046 – 6.25	0.0396	0.0015 – 20.5
Action1	0.050	0.00046 – 6.25	0.165	0.0015 – 20.5
Action2	0.100	0.00046 – 6.25	0.33	0.0015 – 20.5
Fire1	0.250	0.00046 – 6.25	0.825	0.0015 – 20.5

Fire2	0.500	0.00046 – 6.25	1.65	0.0015 – 20.5

When disabled or isolated via the FAAST's local control panel, the FAAST PW4 value changes to a value between 150 and 300µs. This is indicated on the **F100A** display as a "Disabled/Iso" state.

4.6.2 Alarm Verification Facility (AVF)

Each detector has the option to enable the Alarm Verification Facility (AVF). This option is selected in the Engineer's Menu under the Edit option. (Refer to Section 8.2 Status – Status Menu).

If Alarm Verification is enabled, the ***F100A*** resets the detector when an Alarm occurs, and waits 15 seconds before looking for an Alarm from that detector again. If, during a 120 second interval from the end of the first 15-second period another alarm occurs from that detector, (or the detector is still in alarm) the ***F100A*** will immediately go into Alarm state. If no alarms are detected during the 120-second interval, the AVF timer resets, and the procedure will be repeated before an Alarm is signalled by the ***F100A***.

4.7 Virtual Detectors

The F100AVR firmware from revision 4.50 or later incorporates a 'Virtual Detector' feature.

This feature allows an alarm point to have multiple alarm outputs operating at different alarm levels derived from one physical detector.

4.7.1 Device Types

All Detector device types can be set to be virtual detector types. A virtual detector type is signified by a '**v**' in front of the standard detector type, as shown below:

- vOPT virtual Optical detector
- vION virtual Ionisation detector
- vHEAT virtual Heat detector/
- vOMNI virtual Omni detector
- vACLM virtual Acclimate/PTIR/COPTIR detector
- vLASR virtual Laser detector
- vBEAM virtual Beam detector—(use not recommended: has only 1 sensitivity)

4.7.2 Configuration

There may be up to 3 virtual detectors 'vxxx' at the next sequential addresses above the parent 'xxx' detector.

Any number of instances of parent plus virtual detector may be configured, provided there are sufficient free address spaces on the analogue loop. See the example below.

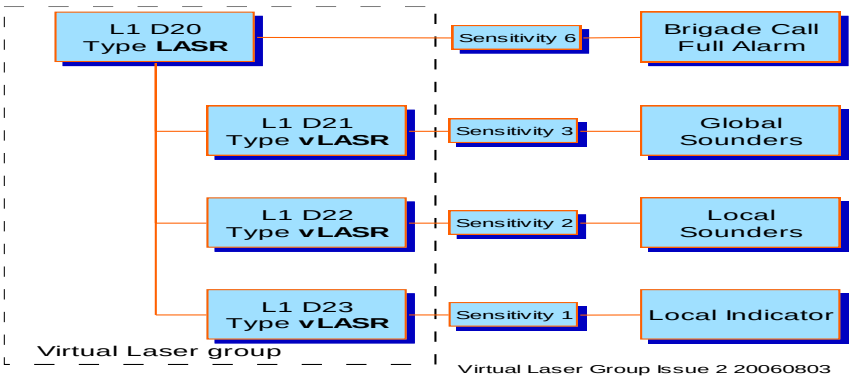

Figure 6: Virtual Acclimate Grouping

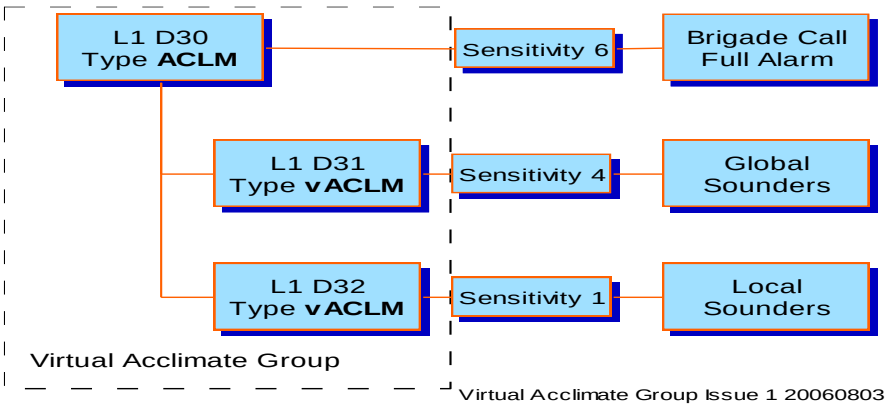

Figure 7: Virtual Laser Grouping

Each of the virtual detector device types has a copy of the current status of the parent detector. In the example above, it is L1D30. They are processed as independent detectors with separate alarm levels, output mappings, and descriptors.

Note: Only the Parent Detector can be programmed to be Brigade Calling
Pre-Alarms are disabled for the Virtual Devices.

4.7.3 Virtual Detector Limitations

Virtual detectors have the following limitations:

- Virtual detectors cannot be configured to be Brigade calling. If required, this function must be programmed into the Parent detector. Consequently, it is expected that all Virtual detectors will be more sensitive than the Parent.
- 'Pre-Alarm' events are disabled for Virtual detectors.
- There can be a maximum three (3) Virtual detectors attached to a Parent detector.
- The only Fault event generated by a Virtual detector is Type Mismatch. This occurs if there is no Parent, a different Parent type, a real detector at the same address, or if there are more than 3 Virtual detectors.

4.7.4 Virtual Device Faults

If the parent detector is in Fault, a device Fault is signalled for the parent address only.

4.7.5 Resolving Address Faults

If a detector is on the loop at an address occupied by a virtual detector, a Type Fault will be generated for that address. If the parent detector is absent, then a single device-missing Fault will be generated at the parent address.

4.7.6 Isolation

Isolating the parent address **DOES NOT** isolate the other virtual detectors within the group. The virtual detectors must be isolated individually using the normal Isolate function.

4.7.7 Alarm Test

Performing an alarm test on the parent device will activate all virtual devices associated with it.

Note: if the Acclimate detector is set to sensitivity level 6, it will not alarm because the Acclimate only returns a Level 5 alarm for an Alarm Test.

4.8 Manual Call-Points

The ***F100A*** uses the ***System Sensor*** Analogue-addressable Call-Point, model number M500KAC.

The TYPE designator assigned for Manual Call-Points is MCP.

Manual Call-Points provide 'Normal', 'Fault', and 'Alarm' states to the ***F100A***.

In a fully implemented ***F100A*** system (4 loops, each having 99 detectors and 99 modules), the Call-Points are polled regularly at a rate of about 3 seconds. If an activation of a Call-Point is detected, the Call-Point is polled again immediately to re-confirm the alarm state, giving a maximum delay before a Call-Point alarm of about 3 seconds.

The Manual Call-Points may be individually assigned a zone number and descriptor, and they have parameters programmed through the Engineer's menu. Manual Call-Point parameters are the same as for detectors except for Sensitivity and AVF, which is not applicable to MCPs. Note, however, that Manual Call-Points are set to be permanently Latching.

The selected address (M01 to M99) is part of the module address allocation.

4.9 Monitor Modules

The ***F100A*** uses the following modules for additional inputs to the system:

- System Sensor M500M Monitor Module
- System Sensor M501M Monitor Module (Miniature)
- System Sensor M502 Conventional Interface Module
- System Sensor M512ME Conventional Interface Module (preferred)
- System Sensor M503ME Monitor Module (Micro, with LED)
- Pertronic F100LR in switch responder mode.

There are a variety of TYPE designators (with corresponding functions) allowable for input modules. These are programmed and controlled by the ***F100A*** in a similar way to Manual Call-Points. They are also assigned parameters and descriptors in the same way. The monitor modules may be programmed for unlatched operation.

The available TYPE designators and a description of their function are shown below:

TYPE Designator	Function	Operation
MCP	Manual Call-Point	Always latches, AVF disabled.
SWCH	Switch Input	As for MCP operation, except that unlatching is allowed and does not activate MCP System Event.
FSW	Flow Switch	As for MCP operation, except that unlatching and AVF are allowed Does not activate MCP System Event. Activates SPR System Event.
VMD	Valve Monitor Device	
SPR	Sprinkler	
PSW	Pressure Switch	
SIP	Sub Indicator Panel	
ISOL	Isolate Switch	When active, the zone assigned to the input is isolated, along with all other devices within that zone. When the input is returned to normal, the zone is de-isolated, and all other devices within the zone are returned to their 'un-isolated' state. **NOTE:** output mapping using panel s/w 4.56 or later differs from earlier versions in that mapped outputs from an Isolate Switch are only active if a device in the associated zone is active. This serves the purpose of Zone Isolate Modules management
ZMU	Zone Monitor Unit (3K9 End Of Line resistor)	Used only by M502 modules. A zone of conventional devices may be connected to the M502 module. An external PSU is required. To reset latching devices, the PSU supply to the M502 must be broken with a relay. This relay may be triggered from the ***F100A*** open-collector programmed as a **RESET** output.
M512	Zone Monitor Unit (loop powered) (3K9 End Of Line resistor)	Used only by M512ME modules. A zone of conventional devices may be connected to the M512 module. The Device may be loop or externally Powered. The M512M Module has an internal reset circuit – no external reset relay is required. **NOTE** The M512ME is only suitable for detectors with resistor-bases and call points; the M512ME will **NOT** work with Conventional call points or detectors without a resistor-base.

Table 4.9:1: Input Module Type Designator

Some modules provide a two or four-wire monitored input circuit. A 47kΩ EOL (end-of-line) resistor is required for the two-wire configuration. (Refer to the Installation and Maintenance Instructions for the M500 series modules, System Sensor document M500-05-00.)

For conventional device operation, the ***Pertronic*** Loop Responder (refer to Section 4.9) or M512ME are better choices than the M502 module, where an external supply is required and where resetting the detectors or modules is more difficult.

The selected address (M01 to M99) is part of the module address space.

4.10 Loop Responder

The Pertronic Industries ***F100LR*** 8-Circuit Loop Responder is a device that allows zones of conventional detector/MCP circuits to be interfaced to an ***F100A***. Each loop responder contains eight conventional zone inputs or circuits, and each circuit occupies a single address in the module address space on the analogue loop. The Loop Responder also contains an addressable relay (1 c/o contact) which can be mapped as a standard loop relay. Addresses are allocated in sequence, with the lowest address being set by the rotary switches on the responder. For example, if the responder switches are set to address 41, the responder would occupy addresses M41 to M49 inclusive. The first eight addresses are allocated to the circuits (1 to 8 respectively). The ninth address space is reserved for the output relay. In the example, this would be address M49.

The TYPE designator assigned for Loop Responders is LPRS.

As with detectors, the parameters and descriptors are assigned for each conventional circuit through the menu system.

> **If Manual Call-Points are installed on a responder circuit, do not set these at the panel as non-latching.**

Later versions of the loop responder include a 'Switch Input' mode. If enabled, the responder behaves in a fashion similar to an input module; each circuit input appears to the ***F100A*** as a system sensor input module, and its TYPE can be set to any of the standard input module types. In 'Switch Input mode, the responder occupies 9 module addresses.

Note that in 'Switch Input' mode a short at the input generates an Alarm.

4.11 Loop Relays

The ***F100A*** uses addressable System Sensor M500CH Control Modules, addressable Pertronic ***F100LR*** (Loop Responders), and ***F100LRU*** (Loop Relays) for relay operation. The selected address (00 to 99) is part of the module address allocation.

The M500CH control module relay output can be configured for clean or monitored relay contacts. This configuration is done physically at the M500CH module. When monitored contacts are required, a 47kΩ EOL (end-of-line) resistor and an external power supply are necessary. (Refer to the installation and maintenance instructions for the M500 series modules, System Sensor document M500-05-00.)

The ***Pertronic*** F100LR Loop Responder relay uses the 9th address from the base input circuit address of the responder. This relay has a single clean change-over contact. For further information, refer to the Loop Responder Technical Manual.

The ***Pertronic*** F100LRU Loop Relay Unit has four pairs of relay contacts available. Each relay pair has one monitored contact and one non-monitored (clean) contact. The Loop Relay (PCB version 2.00 onwards) uses four or eight addresses, starting from the base address selected on the unit. Four addresses are used in Non-Pulsing mode, and eight addresses when Pulsing mode is selected (pulsing mode is generally not used in Australia). When Pulsing mode is selected, the first two addresses correspond to Relay1, and the next two addresses to Relay2, and so on. When the first of each of the two relay addresses is activated, the relay will pulse; when the second address is activated, the relay remains ON continuously—continuous operation overrides pulsing. For further information, refer to the Relay Responder (PCB version 2) technical manual.

All relays can be allocated a zone number (001 to 128) that corresponds to the physical zoning of the loop devices. The zone number is used by the ***F100A*** when reporting a Fault state from a relay control module. Isolating a zone containing Loop Relays also isolates the relays configured to that zone and prevents them from energizing.

Note that the System Sensor Relay/Detector base B224RB contains a relay. This is not controlled from the ***F100A*** as loop relays are. This relay operates when the detector using the base is in the alarm condition.

Loop relays can be configured through the menu system to be one of four types, shown below:

Type	Description	Isolated or Disabled by
RLY	Auxiliary Relay type	Isolate the zone in which the relay is assigned or isolate the device address.
ACF	ACF Relay type	Isolate the zone in which the relay is assigned or isolate the device address. Operate the panel **Isolate ACF** push-button.
DOOR	Door Holder type (not monitored)	Isolate the zone in which the relay is assigned or isolate the device address. Operate the panel **Door Holder Isolate** push-button.
WRN	Warning System Relay type	Isolate the zone in which the relay is assigned or isolate the device address. Operate the panel **WARN SYS ISOLATE** push-button. Operate **WARN SYS ISOLATE** from mimics connected to the panel RS485 port. Operate the **WARN SYS ON** will cause these outputs to toggle ON and OFF with the button press.

Table 4.11:1: Loop Relay Types

For further information on mapping of groups and LED number mapping to relays, refer to Section 7 Mapping.

By default RLY, ACF, and WRN relay types are monitored. Their settings can be changed so they are non-monitored.

4.12 Fan Controller

The ***Pertronic*** Fan Controller is used to control clean air or smoke exhaust systems within buildings. The ***F100A*** treats modules with fan control types uniquely by passing Fan State, Fan Fault, and Fan Control signals directly between the fan control modules. Two types are used for fan control functions, shown below:

Type	Description	Purpose
FANC	Fan Control Unit: Normally mounted in the main panel below the keyboard/display unit.	Detectors associated with the smoke detection/fan control system are mapped to this unit. Timing and other functions are controlled by the Fan Control Unit.
FANR	Fan Relay Unit: Normally mounted near the building services interface equipment.	Commands the associated fan to RUN or STOP. Detects when the fan is running, and reports the status of the fan system to the Fan Control Unit.

Table 4.12:1: Fan Control Units

Two other modules, the Fan Isolate/Reset Unit and the Fan Control Switch, may be used with the Fan Control Unit, but these do not affect the operation or programming of the ***F100A***. For further information, refer to the Fan Control User Manual.

4.12.1 Duct Probe Operation

Versions 4.50 of ***F100A*** firmware allow Duct Detector override of the Fan Control Relay: if smoke is detected in the exhaust / pressurisation duct of a fan control system, the Fan is turned OFF. When the smoke is no longer present in the duct, the exhaust / pressurisation fan is allowed to turn back ON after a period of 60 seconds. To enable this mode of operation, map the duct detector to the required fan relay.
Note:
This requires Fan Controller software version 3.11 or above and Fan Relay software version 2.11 and above.

4.13 Isolation between Zones

Various devices may be used to provide electrical isolation between Fire Zones on an ***F100A*** loop. These devices are listed below:

- Pertronic PSSB524IEFT Speaker Base with Isolator
- Pertronic Loop Responder
- Pertronic Loop Relay
- System Sensor M500X Isolator Module
- System Sensor B224BI Isolator Base

The module or base detects short-circuits in an adjacent zone, and isolates the y zone by disconnecting the loop (opening relay contacts) to that zone.

A maximum of 25 loop devices is permitted between isolators; the only exception is for Omni detectors, where a maximum of five Omni detectors are allowed between isolators.

Isolators are not required adjacent to the ***F100A*** because this is provided for on the ***F100A*** PCB.

A typical loop configuration with Zone Isolator modules is illustrated below.

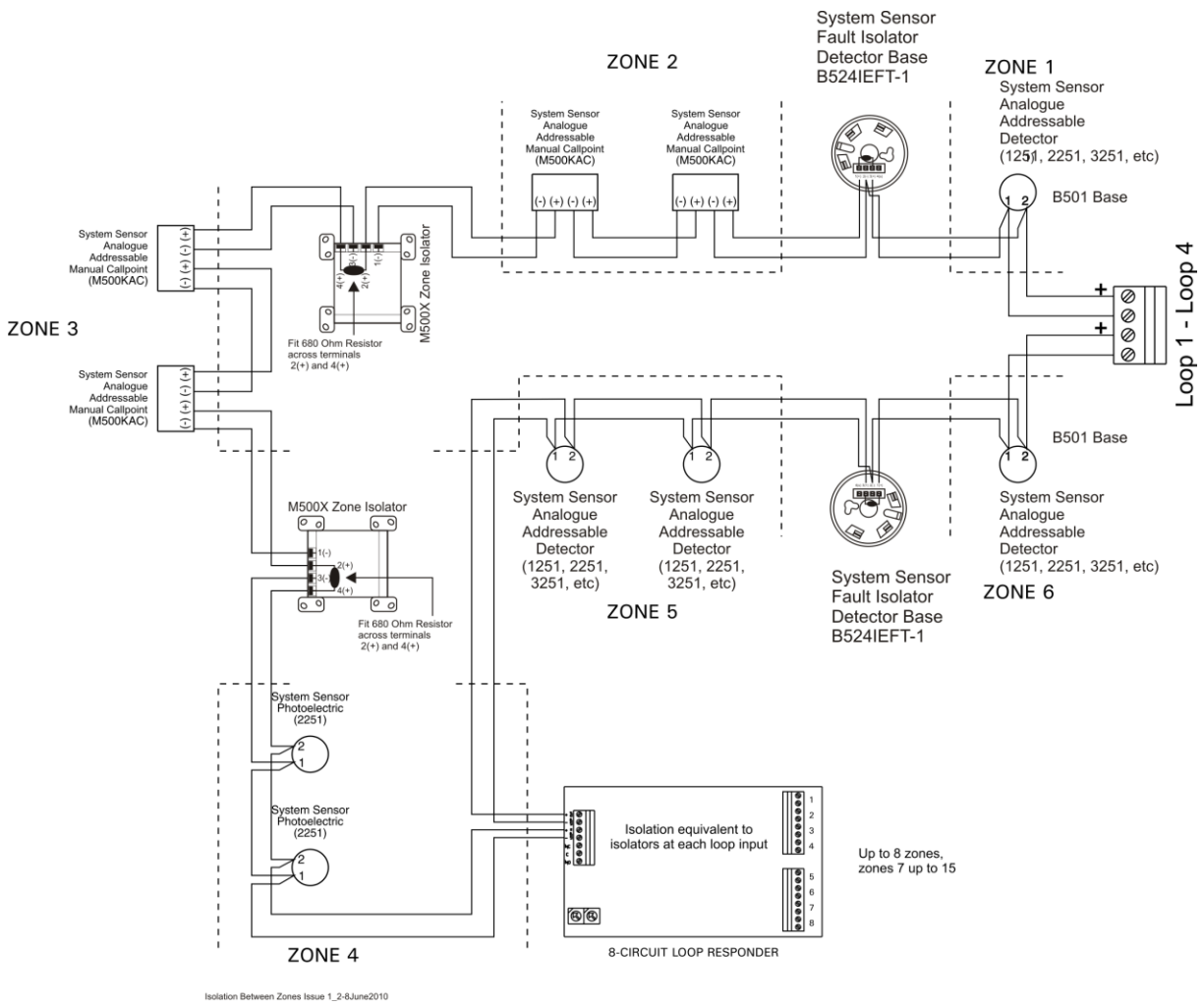

Figure 8: Isolation between Zones

4.14 Loop Device Default Programming

The default programming for Loop Devices is:

Programming	Detectors	MCP	Input Modules	LPRS	Isol switch	SW Input
Day/Night Sensitivity	1	N/A	N/A	N/A	N/A	N/A
Latching	YES	YES (fixed)	YES	YES	N/A	NO
AVF	NO	N/A	NO	NO	N/A	N/A
Warn Sys Relay	YES	YES	YES	YES	N/A	NO
Ext Bell Relay	YES	YES	YES	YES	N/A	NO
ACF Relay	YES	YES	YES	YES	N/A	NO
Door Relay	YES	YES	YES	YES	N/A	NO
Fire Relay	YES	YES	YES	YES	N/A	NO
GP Relay	NO	YES	NO	YES	N/A	NO
Fire Queue	YES	YES (fixed)	YES	YES	N/A	NO
Visible	YES	YES (fixed)	YES	YES	NO	YES
Logged	YES	YES (fixed)	YES	YES	NO	YES
Buzzer	YES	YES (fixed)	YES	YES	N/A	NO

Table 4.14:1: Loop Device Default Programming

5. F100A Peripherals

The Standard ***F100A*** contains a 2-loop driver and an internal LCD Control panel.

5.1 2-Loop Expansion PCB

The ***F100A*** can be expanded to a 4-loop panel by the addition of an internal 2-loop driver PCB. Loops 3 and 4 have the same capabilities and features as loops 1 and 2.

5.2 LED Mimics

The ***F100A*** supports up to eight addressable LED mimic types. These are connected via the common 4-wire RS-485 mimic bus. Mimics may be located up to 1km from the main ***F100A*** (taking into account PSU requirements).

LED display mimic types contain inputs and outputs for a number of useful functions. Refer to the relevant product installation note/manual for more information.

Other (non-display) mimic types are 24V50W amplifier and Evacuate Tone Generator Module.

For more information on the LED Mimic types, consult the relevant documentation.

5.3 100Vrms Amplifiers

The **F100A** supports 100Vrms Amplifiers, which may be configured to operate via the common 4-wire RS-485 mimic bus or using the Warning System or External Bell relay outputs.

If configured to operate from the RS485 bus, the Amplifiers utilise LED Mimic addresses in conjunction with LED mapping to activate the required tones.

The 100V Amplifier options available and an overview of their features are shown in the table below:

	EVAC50W24V	EVACGM – ET/EA	EVAC20W24V
RMS Power	50W	external PA amplifier	20W
Evacuation Tone	T3 tone plus Voice	T3 tone plus Voice	AS2220
Alert Tone	AS2220 + Voice	AS2220 + Voice	No
Simulated Bell	Selectable	Selectable	No
PA Microphone	Selectable	Selectable	No
Fire Mic	Selectable	Selectable	No
Custom Tones	Yes	Yes	No
RS485 Operation	Yes	Yes	No
Bell Operation	Yes	Yes	Yes
Test Tone	No	Yes (ET version)	No

Table 5.3 Amplifier selection

Note 1:The 50W Amplifier and EVACGM provide Standard AS2220 or ISO8201 (T3) Evacuate and Alert tones with audio messages together with 42 (44 for EVACGM) optional tones.

Refer to the relevant manuals/installation notes for more information

5.4 LCD Mimic

The **F100A** supports up to eight additional LCD Mimics; they may be a mixture of Full LCD and Mini-Mimics. LCD Mimics may be located up to 1km from the **F100A** panel, but PSU requirements must be considered.

Additional Mimics can be connected in 'Slave' mode. The mimics are not monitored and cannot be used to access or control the **F100A**. A total of 32 devices may be connected to the **F100A** RS-485 bus.

5.4.1 Full LCD Mimic

Full LCD Mimics have the same controls and displays as the **F100A** panel, allowing full access and control of the **F100A** menu and features.

Full LCD Mimics contain Brigade Evacuate and Silence Alarms key-switches.

5.4.2 LCD Mini-Mimic

Mini-Mimics have three modes of operation:

- **Full Display mode**
  The LCD Mini-Mimic displays exactly the same information as the Master **F100A** LCD display, including all Alarms, Faults, Isolates, etc.
- **Alarm Only mode**
  The LCD Mini-Mimic displays only Alarms and ignores all other conditions.
- **Zonal Mini-Mimic**
  The LCD Mini-Mimic can be configured to display Alarms in specific zones only. Up to 255 Zones can be allocated per mimic.

The Mini-Mimic contains a Buzzer Mute and optional Next and Non-Brigade Alarm Reset buttons.

5.5 GPIB Printer Interface

The F100A can be connected to a GPIB printer interface for hard copy printing of all F100A events.

5.6 GPIB Pager Interface

The **F100A** can be connected to a GPIB Pager interface allowing transmission of flexible paging messages to a pager system. Refer to the GPIB Pager Interface manual for more information.

5.7 Network Interface

The Pertronic Network card allows the interconnection of up to **32 x F100A / F120A** Fire panels over a 4-wire network. This allows programmable 'Alarm' events and optional control of the Fire panels over the network. The **F100A** supports the mapping of 64 events over the network.

6. RS485 Bus

The RS485 driver hardware supports up to 32 physical devices on the RS485 bus and these are connected to the **F100A** through the **External RS485** connector (K7). These devices are a combination of polled and slave devices-including the local **F100A** display and any GPIB / Network cards connected.

Two LEDs, **Tx** (LED1) and **Rx** (LED2), at the top-left of the Master PCB, flash when data is transmitted to, or received from the mimics.

Mimics may be located up to 1km away from the **F100A**. Twisted pair wiring is recommended

Polled Devices

RS485 devices may be any of LCD and/or LED devices. LCD devices may be Full-Function LCD panels, LCD Mini-Mimic panels or 50W Amplifiers. LED devices may be LED Index Panels, 50W Amplifiers or any of the LED-Addressable interface units.

The **F100A** supports a total of 8 addressable LED plus 8 LCD mimics. These devices each occupy a single address slot and are polled to ensure correct operation.

Addressable Mimics each have a different address (1 to 8) and must be sequentially numbered beginning at address 1. The number of Master Mimics (either LED or LCD) is selected from the Engineer's Menu as described in Section **9.5**: **Mimic – Set Number of** LCD and LED Mimics and Network Mode. Full-Function Master LCD Mimics have full keyboard control of the **F100A**.

The following devices may be connected to the RS485 bus:

RS485 Devices	LED Address	LCD address
LCD Full-Function Mimic	–	1 – 8
LCD Mini-Mimic: Hardware ≥ v1.35, Firmware ≥ v2.24	–	1 – 8
LCD Mini-Mimic: Hardware ≥ v1.35, Firmware ≥ v2.24	–	1 – 8
LED Mimic: 12-Way Smart LED board	1 – 8	–
EVAC50W24V Amplifier	1 – 8	1 – 8 (v.2.14 +)
EVACGM-EA/ET Tone Generator	1 – 8	1 – 8 (v.1.16 +)
LED Address Controller:	1 – 8	–
RS485 I/O Card:	1 – 8	
Zonal Alarm	–	1 – 8
Network Interface		See Network config
GPIB		1 per Channel
RS485 Sub-Units:		
8-Way LED Extender board		
8-Way LED Relay board (connect only to LAC485)		
LED Zone Address Offset board		
48-Way Open-Collector board (connect to LAC485 or RS485 I/O board		

Table 6.1: RS485 Devices

The RS485 Devices below provide the following control functions:

RS485 Device	Full Control	Warn Sys On	EBCO	NBR
LCD Full-Function Mimic (clock set only possible at panel)	✓	✓	✓	×
LCD Mini-Mimic: Hardware ≥ v1.35, Firmware ≥ v2.24	×	×	×	✓
LCD Mini-Mimic: Hardware < v1.35, Firmware < v2.24	×	×	×	✓
LED Mimic: 12-Way Smart LED board	×	✓	✓	×
EVAC50W24V Amplifier	×	✓	×	×
EVAC Generator	×	✓	×	×
LED Address Controller:	×	✓	✓	×
Zonal Alarm Mimic	×	×	×	✓

Table 6.2: RS485 Device Control features

Slave mimics

In addition to the 8 LCD and 8 LED mimics supported by the F100A further RS485 devices can be added to the bus however these devices are “display only” and are not monitored by and cannot control the F100A.

7. MAPPING

The ***F100*** has comprehensive but relatively simple mapping functions. The panel has 16 built-in Timers and 32 Logic functions and programmable system events. This design allows complex alarm activation algorithms to be built into the panel.

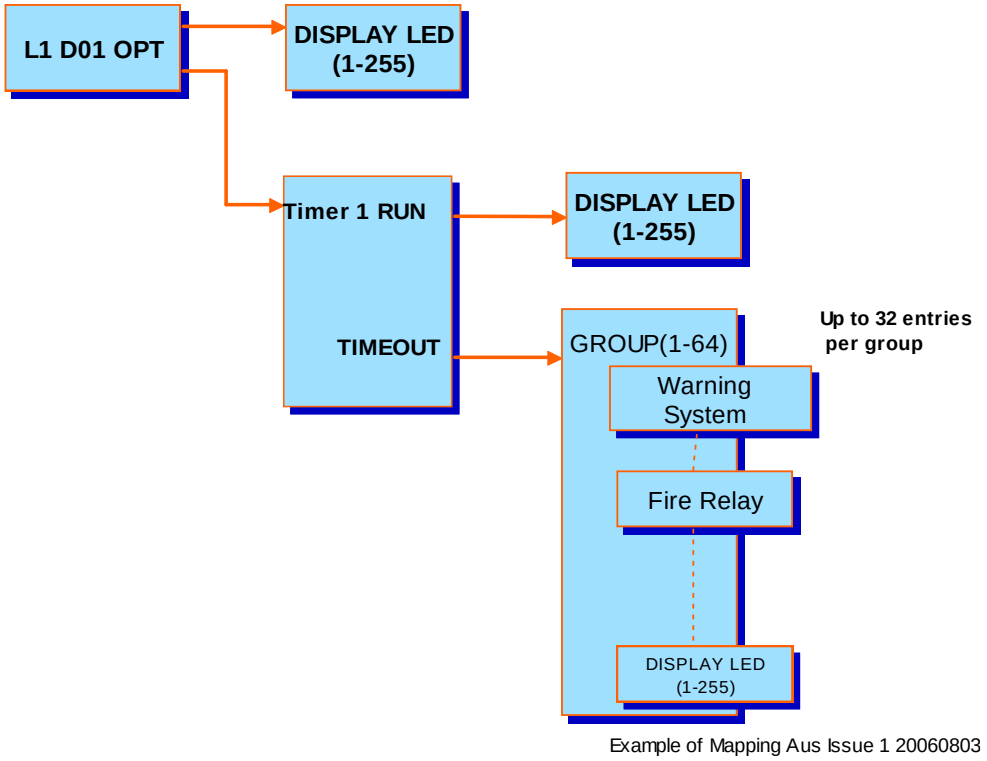

Figure 9: Example of Mapping

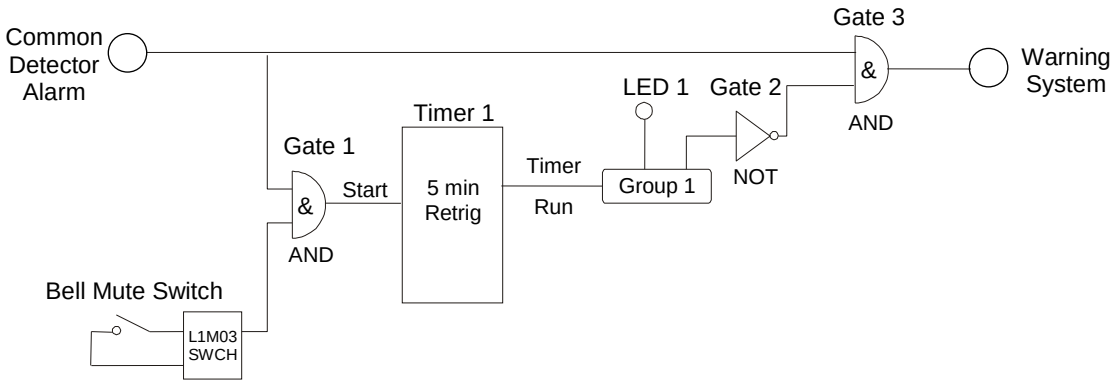

Figure 10: Warning System Mute Mapping Example

Figure 10 above shows a Mute Delay for a Warning System. After an alarm, the Warning System may be muted for 5 minutes by pushing the Bell Mute switch. This starts Timer 1, which mutes the Warning System via Group1, Gate2, and Gate3 while the Timer is running.

7.1 Common Output Functions

Any Input device can be mapped to a number of output functions such as LED'S, Loop Relays, Groups, on-board Relay or Open-Collector Outputs, or one of the Timer or Logic functions. The Logic functions can be combined to provide complex alarm-signalling algorithms.

7.2 Input Functions

7.2.1 Loop Input Devices

All Loop Input devices have four configurable outputs; each output can be one of the common output functions.

7.2.2 Network Inputs

The **F100A** has 64 Network Inputs; each input has four configurable outputs, and each can be one of the common output functions.

7.2.3 Global System Outputs

The **F100A** has 16 programmable global System outputs; each has four configurable outputs, and each can be one of the common output functions.

The System Events are listed in the table below:

Table 7.2:1: Global System Event Outputs

Action	Causes
Common Fire	Active for any event in the Fire Queue.
MCP Alarm	Active for any device in Alarm, programmed as an MCP or a Loop Responder with an MCP activation.
Detector Alarm	Active for any detector in Alarm or a Loop Responder with detector activation.
Common Fault	Active if ***F100A*** is in Fault (normally de-energised)
Common Isolate	Active for any event in the Isolate queue.
Pre-Alarm	Active if any detector is in Pre-Alarm state
Common Evacuate	Active if any **EVACUATE** switch or input operated.
Acknowledge	Momentarily active if any Alarm has been acknowledged.
Sprinkler	Active if any Loop SPR device in Alarm.
Common Reset	Active if device or panel reset.
Buzzer	Active if the display buzzer(s) are sounding
WarnSys Isolate	Active if **WARN SYS ISOLATE** is operated.
ACF Isolate	Active if the ACF relays are isolated
Mains Fail	Active if the 240Vac supply has failed
Door Open	Active if the ***F100A*** panel door is open.
Heat Alarm	Active When a Heat Detector or Acclimate at level 6 (heat only) is in Alarm

7.3 Loop Output Devices

Loop Relays/Fan Control modules are mapped directly via the common output functions.

7.4 Groups

The **F100A** supports 64 Groups. A Group consists of a list of up to 32 entries, with each entry being one of the common output functions. **F100A** firmware version 4.50 and above supports Group-to-Group mapping, without restrictions on the order of Groups mapped.

8. OPERATING THE USER MENU

The User Menu is reached by pressing **Menu** on the front panel of the **F100A**. The User Menu consists of a number of soft-key options that can be selected through the bottom row of keys with sub-labels **F1** through to **F6**. For example, the first User Menu display is shown below:

```
              User Menu
Reset  Status  Log   Isol   More  Exit
```

To choose the Status function, press **F2**. Alternatively, to choose Reset, press **F1**.

The User Menu function tree is shown below:

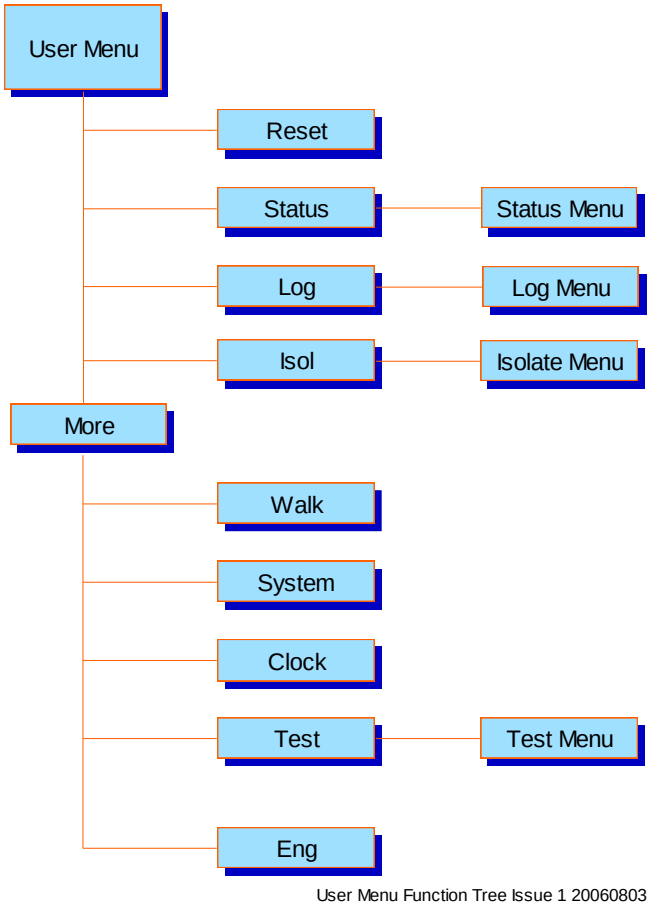

Figure 11: User Menu Function Tree

The first eight of these functions are described in this section. The **Eng** function leads to the Engineer's Menu, which is described in Section: 9 Operating the Engineers Menu.

8.1 Reset – System Reset

Soft-key **F1** selects the Reset function.

```
System Reset
Please Wait...
```

The message above is displayed on the LCD for the reset period while the **F100A** resets all latched states, clears all Faults, resets the onboard relays, and resets all Loop Input devices

and Loop Relays by powering-down the Loops. If any isolated devices have latched LEDs (Alarm state), these are also reset.

8.2 Status – Status Menu

Soft-key **F2** selects the Status Menu.

8.2.1 Loop Status Menu

```
Status Menu
Loop   Timer   Gate          Exit
```

Press soft-key **F1** to select the Loop Device status function, where an input device on a particular loop can be selected and its status displayed. An input device may be isolated or removed from isolate. The Status display shows the current Alarm level of detectors—in degrees C for heat detectors, or as a percentage of of the Alarm Level for smoke detectors. Other devices show the current PW4 value in uS.

```
L1D01   :Heat   21 Deg.c (33) Stat: NORM
Zone 021   Loc. Metal Workshop
```

The status of the first active device on the system is displayed on the LCD. The display indicates that Heat Detector 1 on Loop 1 is in the Normal (NORM) state with a temperature of 21°C. Use the soft-key Enter (F5) to cycle through the display options.

8.2.2 Display Fields

Display	Meaning
Ln	**L** represents 'Loop'. **n** has a value of 1 to 4.
Maa or **Daa**	**M** represents Module, **D** represents Detector. **aa** can be **00** to **99**, the address of the device.
Type	Indicates the type of device – refer to Table 9.2:1: Input and Output Device Types.
xx Deg.c(yy)	Indicates the current temperature of a Heat detector in °C and the 'count'
Pre xx Deg.c	Shows the current pre-alarm threshold temperature of a Heat detector in °C
Alm xx Deg.c	Shows the current alarm threshold temperature of a Heat detector in °C
xx % Alm(yy)	Indicates the analogue value of a detector as a percentage of the current alarm level and 'count' – smoke detectors only
Pre xxxx uS	Shows the current pre-alarm level in µS – smoke detectors only
Alm xxxx uS	Shows the current alarm level in µS – smoke detectors only
Ca xxxx uS	Shows the current clean air value in µS – Smoke detectors only
Mt xxxx uS	Shows the maintenance alert threshold in µS – Smoke detectors only
PW4 xxxx uS	Shows Raw Pw4 value in µS
Stat	Indicates the status or state of the selected device. Possible states include Normal, Alarm, and Fault – refer to Table 8.2:2: Status Codes for a full list.

Display	Meaning
Zone	Reports the zone number assigned to the selected device
Loc	Represents the description of the location of the device

Table 8.2:1: Status Menu Display Fields

8.2.3 Status Codes

Display Code	Meaning
ABS	Device Missing (absent)
FLT	Fault
TYPE	Wrong Type
PRE	Pre-Alarm
ADDR	Double Address
NoCFG	No Configuration
RST	Resetting Device(s)
ISLR	Isolate Relay Operated – Loop Responder or -Relay
HI	Datum High Fault – Loop Responder
LO	Datum Low Fault – Loop Responder
SHORT	Input Short-circuit – Loop Responder
AVF1	AVF Stage 1 Operated
ALARM	Device in the Alarm State
ON	Relay Activated
NORM	Device Normal
MCPALM	MCP Alarm
PSU	Power Supply Fault

Table 8.2:2: Status Codes

8.2.4 Address Selection Options

Use the **PREVIOUS** and **NEXT** keys to scroll the cursor over the Device Address on the LCD. Options include the following:

- With the cursor over the Loop number, use **Incr (F2)** or **Decr (F1)** to change the Loop number
- When the cursor is over the D or M, use **Incr (F2)** or **Decr (F1)** to switch between the Detector and Module address range.
- When the cursor is over the decade of the address, use **Incr (F2)** or **Decr (F1)** to add or subtract 10 from the address
- When the cursor is over the unit of the address, use **Incr (F2)** or **Decr (F1)** to change address by 1.
- **Loop (F3)** jumps to lowest active address on the next loop.
- **Device (F4)** jumps to the next active address on the current loop.

8.2.5 Input Device Isolation

A device may be isolated, or removed from isolation, by toggling the **ISOLATE** push-button. The state of the device is shown in the Stat field of the display. If the device is in 'Alarm', a warning is given before proceeding with Isolation.

8.2.6 Timer Status

Press soft-key **F2** to select the Timer status. This shows the current state of the 16 programmable Timers.

```
Timer[01] Status: Running
Counter 01 Min 35 Seconds
```

Status: indicates the current state of the selected Timer.
Counter: shows current Timer value.

Use the **Incr (F2)** and **Decr (F1)** keys to select the required Timer. Soft-key **F6** exits the menu.

8.2.7 Gate Status

Press soft-key **F3** to select the Gate status. This shows the state of the 32 programmable Logic Functions.

```
Gate[01] (AND) Inputs: 002  Active:002
Status: High
```

Inputs: indicates the number of inputs mapped to the gate.
Active: shows current number of inputs that are active.
Status: indicates the current state of the selected gate.

Use the **Incr (F2)** and **Decr (F1)** keys to select the required gate. Soft-key **F6** exits the menu.

8.3 Log – Event Log Menu

Soft-key **F3** selects the Event Log Menu.

```
Log Menu
All  Fire  Fault  System        Back
```

The **F100A** has 2560-capacity Event Log. To reduce the possibility of spurious events overwriting important information, the log is split internally into five separate 512-Event logs. Note that although there are 512 events logged, only the first 128 events are displayed. Events 129 to 512 are displayed, as and when the first 128 events normalise in the logs shown below:

- Fire — All events in the Fire ('Alarm') list.
- Isolation — Zone, Loop Device, Timer, Gate and Network Isolations.
- Loop Fault — Analogue Loop faults
- System Fault — System faults
- System Events — System information events.

The soft-keys have the following functions:

- Soft-key **F1** (All) — displays a combination of all logs.
- Soft-key **F2** (Fire) — displays the Fire log.
- Soft-key **F3** (Fault) — displays a combination of Loop and System Fault logs.
- Soft-key **F4** (User) — displays a combination of the Isolation and System logs.

Event restores <Normal> are also logged. Each log is displayed in chronological order, the most recent event shown first. Use **PREVIOUS** and **NEXT** to scroll forward and backward through the log.

A typical Event Log display is shown below:

```
0023: MCP ALARM    L1M05 MCP
At: 14:20:25 Wed-16-Jul 2005
```

0023 Is the Event Number.
Event number 0001 is always the last event recorded.
The highest number contains the oldest event.

The maximum number of events is 2560.

MCP ALARM	Is the Description of the event - refer to Section 8.5: Event Message Description for a list of events.
L1	Is the Loop Number (1 to 4) containing the device
M05	Is the address of the device (M=module, D=detector). Addresses D00 to D99 represent detectors, and addresses M00 to M99 represent modules
MCP	Indicates the Device Type on which the event occurred - these are listed in Table 9.2:1: Input and Output Device Types.
14:20:25	Is the time (24-Hour system) that the event occurred.
Wed-16-Jul 2005	Is the date the event occurred.

8.4 Event Log Messages

The Event Log messages, like the events themselves, can be split into five basic groups: Alarm or Activation events, Loop fault events, System Fault events, Isolate events, and System Information events

8.5 Event Message Description

Event Type	Event Description
Alarm	Applies to a Loop Input device – Detector, Manual Call-Point or Input Module, when the device is in 'Alarm'. From v4.56, the Device Descriptor text alternates every few seconds with the Zone Descriptor provided the Zone descriptor doesn't start with a <blank> before the first character. If it does start with a <blank>, only the Device descriptor gets displayed.
Ack'd Alarm	Applies to a Loop Input device – Detector, Manual Call-Point or Input Module, when the device has been Acknowledged.
Local MCP Activation	Applies to the local MCP input.
Test Alarm	Applies to a Loop Input device – Detector, Manual Call-Point or Input Module; when the device goes into 'Alarm', after activation by the Alarm Test Menu or Walk Test functions.
Timer xx Running	Timer xx has been started, where xx is one of the **F100A's** 16 programmable Timers.
Timer yy Complete	Timer yy had been started and its timeout period has been reached, where yy is one of the **F100A** 16 programmable Timers.
Gate zz Activated	Gate zz input conditions have been met and is Active, where zz is one of the **F100A** 32 programmable Gates.
Network Input zz Alarm	Net Input zz has activated. The **F100A** has 64 programmable Network Inputs - refer to Section: 9.2.7.3: Net - Network Edit for more information.

Table 8.5:1: Alarm Events

Event Type	Event Description
Missing	A loop device that has been configured in the **F100A** non-volatile configuration memory is not present on the loop.
Double_addr	Two loop devices on the same loop have been assigned the same address.

Event Type	Event Description
Pre-Alarm	Applies to detectors only. The analogue value being returned is approaching the detectors alarm threshold level.
Wrong Type	A loop device does not match with the configuration assigned to it in the system memory.
Fault	Applies to a loop input device – Detector, Manual Call-Point or Input Module, where the device is not responding to its poll correctly, or PW4 is out of range.
Test Fail	A loop device has failed the 24-hour auto-test.
Reset	A Pertronic loop device has been re-started either by its internal watchdog or commanded by the panel to reset or when the loop power was re-connected.
Short	Short-circuited zone input on a Pertronic loop device.
Isolator	The built-in Loop Isolator on a Pertronic loop device has operated.
Hi Flt	Loop Responder input circuit voltage datum too high
Lo Flt	Loop Responder input circuit voltage datum too low

Table 8.5:2: Loop Fault Events

Message	Meaning
Loop x Break	The loop indicated (x, 1 to 4) has an open-circuit on one or both of the loop conductors.
Battery Low Alarm	The battery voltage has fallen below 24 V.
Battery Fail/Missing	The battery is disconnected
Charger volts high	The battery voltage has risen above 28.5 V.
Charger volts low	The battery voltage has dropped below 25.9 V.
Mains Fail	The 230 Vac Mains supply has been off for 1 hour.
Warning System Fault	Warning System circuit is faulty (open or short-circuit)
Extension Bell	Extension Bell circuit faulty (open or short-circuit)
ACFM Monitor	The ACFM line is y (open or short-circuit)
ROM CRC Error	An error has occurred in the **F100A** system memory ROM.
Config CRC Error	An error has occurred in the **F100A** configuration memory ROM.
Earth Fault	A Fault has been detected between the external wiring connected to the **F100A** and Mains Earth.
LCD Mimic xx Missing	The LCD mimic at address xx is not responding.
LED Mimic yy Missing	The LED mimic at address xx is not responding.
Extra LCD mimic xx	Extra LCD mimic found at address xx.
Extra LED mimic yy	Extra LED mimic found at address yy.
LCD Mimic xx Fault	LCD mimic xx fault input is open-circuit.
LED Mimic xx Fault	LED mimic xx fault input is open-circuit.
LED Mimic xx Int.Flt	Fault on LED Mimic xx, tpic LED chain, or end-of-line link on tpic chain missing.
Int Loop Driver Fault	Loops 1 and 2 loop driver (on-board) microprocessor is not responding.
Ext Loop Driver Fault	Loops 3 and 4 loop driver microprocessor (on external card) is not responding.
External Fault	The External Fault Input on the **F100A** Master PCB is open.
Net Card Missing	The **F100A** Network card is not responding.
Net Comms Out Lost	Communications has been lost to the network card connected to the OUT terminals.
Net Comms In Lost	Communications has been lost to the Network card connected to the IN terminals.
Net Dup Card	There are two Network cards on the system with the same (duplicate) Address.
Net Break	There is a break in the Network wiring elsewhere on the system.
Net Fault	There is a Fault with another Network card on the system.
Net Earth Fault	There is a Fault between the Network wiring and Mains earth.
Brigade Alarm Isolation	The Silence Alarms key-switch has been used to isolate devices in Alarm.
RS485 Display Comms Timeout	No Communication from F100A master board to display.

Table 8.5:3: System Fault Events

Event	Description
Device Lx Dyy Isolated	Detector Loop x Address yy has been isolated.
Device Lx Myy Isolated	Module or Relay Loop x Address yy has been isolated.
Local SPR Isolated	The on-board Sprinkler Input has been isolated.
Zone xxx Isolated	Zone xxx (001 to 128) has been isolated through the User Menu.
Timer xx Isolated	Timer xx has been isolated
Gate xx Isolated	Gate xx has been isolated
Net xx Isolated	Network input xx has been isolated

Table 8.5:4: Isolate Events

Event	Description
Power Up	The **F100A** has been powered up, or reset via the PCB push-button **RESET**.
Watchdog Restart	The **F100A**'s Microprocessor has been restarted by its internal watchdog monitor.
Door Open	The **F100A** door is open.
Door Closed	The **F100A** door is closed.
Door Holder Isolated	The door is closed after the Door Holder relays have been isolated through the **Door holder Isolate** push-button on the front panel.
ACF Isolate	The ACF Relay has been isolated through the **ACF Isolate** push-button on the front panel.
LCD mimic xx EBCO	The **Silence Alarms** key switch on LCD mimic xx has been operated.
LED mimic xx EBCO	The **Silence Alarms** key switch on LED mimic xx has been operated.
LCD mimic xx Evac	The **Evacuate** switch on LCD mimic xx has been operated.
LED mimic yy Evac	The **Evacuate** switch on LED mimic xx has been operated.
PC Connected	A PC was connected to the **F100A** directly or remotely using a modem.
PC Disconnected	A PC that was connected to the **F100A** (directly or remotely by a modem), was disconnected.
Brigade Called	The **F100A** called the Fire Brigade. This is logged as confirmation that the Fire relay has energised.
Smoke Reset Operated	The **F100A** Non-brigade reset function has triggered
Bells Muted	The **F100A** Bells Mute function has triggered
Clock Changed <From>	The clock was changed from:
Clock Changed <To>	The clock was changed to:

Event	Description
DayTimer xx Active	Day Timer number xx is active.
System Warn Sys Isol	The Warning System has been isolated by mapping
System Warn Sys Active	The Warning System has been activated by mapping
Config changed-Password	The panel password has been changed.
Config changed- Learn Loop All	All loops have been learned.

Table 8.5:5: System Events

8.6 Isol – Zone and Input Device Isolate

Press **F4** to access the Isolate Menu here:

```
            Isolate Menu
Zone   Dev  Clr-Isol  Timer  More  Exit
```

8.6.1 Isolate Over-View

Any device or function capable of generating an Alarm or Fault may be isolated on the **F100A**.
Loop devices, loop devices in a particular zone, Timer or Logic functions, Network inputs, and on-board Local MCP Inputs may all be isolated, and thus be prevented from generating an Alarm or Fault condition.

8.6.1.1 Loop Devices

Loop devices may be isolated by one of three ways:

- By using **ISOLATE** on the Alarm Acknowledge facility when a device is in Alarm or Fault. Press **ISOLATE** to isolate the displayed device.
- From User Status menu. Devices are selected through the menu and can be put into, or out of, the isolated state by pressing **ISOLATE**.
- From the User Isolate Menu. Devices are selected through the menu, and can be put into, or out of, the isolated state by pressing soft-key **F5**.

8.6.1.2 Zones

Isolating a zone resets all loop devices allocated to that zone which are in Alarm or Fault and removes them from the relevant Alarm, System, or Fault queue. Any loop output devices—loop relays, for example—are de-energised and prevented from activating until the zone is de-isolated.
Zones may be isolated in two ways:

- Via the User Menu system, they can be put into, or out of, the isolated state by pressing **ISOLATE**.
- Via an ISOL type input. If a M500 input module is configured as an **ISOL** type, then, when the input is in Alarm, the zone allocated to the module is automatically isolated. Similarly, restoring the switch de-isolates the zone.

From v4.56, the Zone Isolation menu has been amended to show the Zone Descriptor and the Zone State.

```
        Status:Alarm
Zn:001 Zone 001  Descriptor  toggle Exit
```

8.6.1.3 Timer/ Logic Function

Isolating a Timer or Logic function removes any activation from the relevant Alarm or System queue and prevents further activations. They may be isolated in two ways:

- By using **ISOLATE** on the Alarm Acknowledge Facility when the Timer or Gate is in active or triggered state.
- Via the User Isolate menu.

To Isolate a Timer, or remove a Timer from Isolate, use the path shown below:

User/ Menu/ Isol/ Timer

From the Timer Isolate Menu, select and accept the Timer to isolate.

To isolate a Logic Function, or remove a Logic Function from Isolate, use the path here:

User/ Menu/ Isol/ More/ Gate

From the Gate Isolate Menu, select and accept the Logic Function to isolate.

To clear all loop devices from Isolate, use the path below:

User/ Menu/ Isol/ More/ Clr_Isol

Then, accept, or refuse to remove, all loop devices and zones from isolate.

Loop devices may also be put into and taken from Isolate through either the Device Status display or the Device Isolate Menu by toggling the **ISOLATE** push-button on the Alarm Acknowledge Facility. The two paths are shown below:

- **User/ Menu/ Status/ Device**
- **User/ Menu/ Isol/ Device**

Both will display the device status. The loop number and device number can be selected and the **ISOLATE** push-button used to isolate (or remove from Isolate) the selected device.

If an isolated device is in the Alarm state when an attempt is made to remove it from Isolate, a request for confirmation is displayed before the device can be removed from the Isolate condition.

Similarly, if an isolated zone is in the Alarm state when an attempt is made to remove it from Isolate, the **F100A** first checks for any devices in Alarm within that zone. If one or more devices are in the Alarm state, a request for confirmation message is displayed before the zone can be removed from the Isolate state. Refer to Section 8.6.5: Network Inputs

Isolating a Network input prevents activation of that input generating an ‘Alarm’.

Network inputs, like loop devices, may be isolated in one of two ways:

- By using **ISOLATE** on the Alarm Acknowledge Facility when a device is in Alarm or Fault. Pressing **ISOLATE** isolates the displayed device.
- By using the User Isolate menu. Devices are selected through the menu, and they can be put into, or out of, the isolated state by pressing soft-key **F5**.

8.6.1.4 Local MCP input

The local Manual Call Point can be isolated by one of two methods:

- Use **ISOLATE** on the Alarm Controls when the local MCP is in 'Alarm' or '.
- Select Isol \ More \ Local MCP from the User Isolate Menu to isolate or de-isolate the local MCP (soft key: **F3**).

From v4.56, the current status of the local Sprinkler is displayed in the Isolate menu.

```
Isolation Menu
Gate Net Local MCP:NORM   Isolate   Back
```

8.6.2 Device

Press **F2** to display Loop 1, Detector 1 and to indicate whether the device is normal or isolated.

```
Device Isolation Menu
L1D23 (OPT ) Normal        Isolate  Exit
```

The loop number can be incremented by pressing **Loop (F3)**. The push-buttons **Incr (F2)** and **Decr (F1)** may also be used to decrement and increment the Loop number once **Loop** has been pressed.
The address and device type (D or M) can be incremented by pressing **Device** and, as for the loop number, **Incr (F2)** and **Decr (F1)** may be used to increase and decrease the address once **Device (F4)** has been pressed.
F5 is used to toggle between Isolate and Normal operation.

8.6.3 Removing a Device from Isolate

De-Isolating a device is identical in operation to an AAF de-isolate operation. If an isolated device is in the Alarm state when an attempt is made to remove it from Isolate, a request for confirmation is displayed before the zone or device can be removed from the Isolate condition. That request message is shown below:

```
** WARNING ** L3D28 IS IN ALARM
PRESS ACK TO CONFIRM DE-ISOLATE
```

Press **ACK** to remove the de-isolate the device; otherwise, press any other key to cancel the request. If no key is pressed, the request is cancelled after 10 seconds.

8.6.4 Zone Isolation

Press soft-key **F1** to display Zone 1 and to indicate whether the zone is isolated or operating normally.

```
Zone Isolate
Zone:001 NORMAL            Isolate  Exit
```

The zone number is selected by using **Incr (F2)** and **Decr (F1)**. To select Isolate or De-Isolate for that zone, use soft-key **F5** to toggle between the two states.

For example, if Zone 23 has been isolated, the LCD displays the following screen:

```
Zone Isolate
Zone:023 Isolated        De-Isolate Exit
```

8.6.5 De-Isolating a Zone

If an isolated zone is in the Alarm state and a request is made to remove it from Isolate, the **F100A** first checks for any devices in Alarm within that zone. If one or more devices are in the Alarm state a confirmation request message is displayed; otherwise, the zone is taken from Isolate.

```
** WARNING ** L3D28 IS IN ALARM
PRESS ACK TO CONFIRM DE-ISOLATE
```

Press **ACK** to remove the zone from Isolate; otherwise, press any other key to cancel the request. If no key is pressed, the request is cancelled after 10 seconds.

When the zone is de-isolated, the **F100A** resets all devices within that zone.

8.6.6 Timer Isolation

Soft-key **F3** brings up the Timer Isolation menu.

```
Timer Isolation Menu
Timer[01] Normal          Isolate Exit
```

Use **Incr (F2)** and **Decr (F1)** soft-keys to select the required timer, and then soft-key **F5** to toggle the isolation state. Soft-key **F6** exits the menu.

8.6.7 Isolation (More)

Soft-key **F5** shows the following menu:

```
Isolate Menu
Gate  Net  Local_MCP          Exit
```

8.6.8 Gate Isolation

Soft-key **F3** brings up the Gate Isolation menu.

```
Gate Isolation Menu
Gate[01] Normal           Isolate Exit
```

Use **Incr (F2)** and **Decr (F1)** soft-keys to select the required logic gate, and then soft-key **F5** to toggle the Isolation state. Soft-key **F6** exits the menu.

8.6.9 Network Input Isolation

From the Isolation (More) menu, soft-key **F1** shows the Network Isolation menu, sown below:

```
Network Isolation Menu
Net[01] Normal            Isolate Exit
```

Use **Incr (F2)** and **Decr (F1)** soft-keys to select the required Network input, and then soft-key **F5** to toggle the Isolation state. Soft-key **F6** exits the menu.

8.6.10 Local MCP Isolation

From the Isolation (More) menu, soft-key **F3** (**Local_MCP**) toggles the Local MCP input Isolation state.

8.6.11 Clear All Isolations

Select yes (**F1**) or no (**F6**) to carry out the required operation. If no action is taken within 5 seconds, the LCD display will revert back to the Isolate Menu. If a zone or device is isolated but is in the alarm state, the user will be asked to confirm the Clear Isolate command.

8.7 Walk – Enter Walk Test

Walk Test is reached by pressing **F1** on the second User Menu display after selecting the soft-key **More**, or by pressing the **Walk Test** button on the **F100A**'s control panel. When the **F100A** is in Walk Test, the LCD display shows this message:

In Walk Test

The status display for the first device operated is displayed on the LCD, where the address, zone, loop, device type, and other configuration parameters are shown. When the operated device is restored to normal, the **F100A** automatically resets that circuit to Normal.

If the cabinet door is closed with the **F100A** left in the Walk Test condition, a Door Interlock Fault is transmitted.

The **F100A** is removed from Walk Test mode by pressing any key.

8.8 System – Display the System Status

Press **F2** on the second User Menu display to bring up the System Status on the LCD. The screen will resemble that below:

```
Total Fires 017    Charger Volts 27.32V
Total Faults 104   Battery Volts 26.96V
```

Total Fires is the number of alarms the **F100A** has processed since the system was commissioned. Similarly, **Total Faults** is the number of Faults in the same period and **Battery Volts** is the current voltage of the system measured at the Battery input to the power supply. Note that this voltage is dependant on the state of the battery and the charger.

8.9 Clock – Set Time and Date

Press **F3** on the second User Menu display to allow the Date and Time to be set. This function can only be carried out at the **F100A** panel display, not from the Panel Configuration Utility. The current Date and Time is displayed as shown below:

```
Set Time/Date
17:30:22 17/03/02
```

The cursor flashes in the left-hand field (Hours). Use **Decr** and **Incr** to decrease and increase the Hour's field (00 to 24).

Press **NEXT** to move to the next field on the right (Minutes), and again use **Decr** and **Incr** to change the numeric value for each field. Use **NEXT** to move to the field on the right. If the cursor is at the right-most field, **NEXT** moves the cursor back to the left-most field.

The order and range of fields is shown below:

Hours (00-23) : Minutes (00 – 59) : Seconds (00 – 59)

Day (01 – 31) / Month (01 – 12) / Year (00 – 99)

If the Year field is selected, **NEXT** moves the cursor to the Hour's field. To accept the selected Time and Date, press **Enter**. The LCD reverts to the User Menu.

If **RESET** is pressed before **Enter**, no changes are made, and the system returns to the User Menu.

If an attempt to edit the time is made at a remote LCD mimic, the message below is displayed:

8.10 Test – Auto, Fire, Fault, and Lamp Tests

Press **F4** on the second User Menu display to access the Test Menu shown below:

```
Test Menu
Auto  Fire  Fault  Lamp        Back
```

8.10.1 Auto

Press **F1** to initiate the 'Auto-Test' sequence. The 'Fire' relay, 'Fault relay, buzzer, battery, and all Loop detectors are tested. A warning is displayed advising the Brigade will be called—this must be acknowledged to start the Auto Test.

8.10.2 Fire

Press **F2** to initiate individual detector 'Alarm' tests. The LED of the selected device turns ON, and the Test Status is displayed: either PASS or FAIL.

8.10.3 Fault

Press **F3** to initiate a panel 'Fault' test, deactivating the 'Fault relay and turning on the panel Fault LED.

8.10.4 Lamp

Press **F4** to initiate the 'Lamp' test. This tests all front panel LEDs and all segments of the LCD, including the backlighting. Full Mimics and LED Mimics similarly activate all LEDs and LCD segments; Mini-Mimics, however, do not do so. If the door is closed or the door switch activated, Lamp Test will not function. Press any button to exit.

8.11 Diagnostic Display

The F100A Status menu contains an additional diagnostic display that can be accessed to provide detailed Loop device status information to assist with troubleshooting these devices. In most situations the information available will be requested by Pertronic Technical Services personnel.
To access the Diagnostic Display the user must be in the Loop Status Menu–see 8.2.1

```
L1D01 :Opt   1% Alm(27) Stat: NORM
 Zone 021   Loc. Metal Workshop
```

Move the LCD screen text cursor over to the Alarm Level section by pressing 'next' key.
The bottom line of the LCD display will change to show information similar to that shown below:

```
L1D01 :Opt   1% Alm(27) Stat: NORM
M01 C00 c00 L05 tm0 t00 ca0 1 1 2,36,38
```

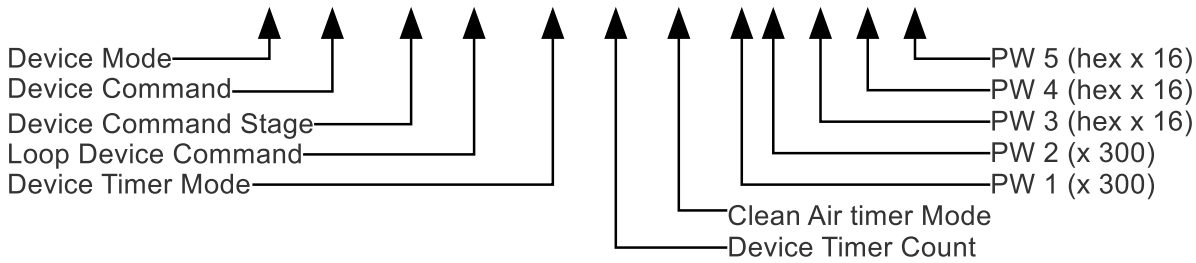

Note: Return to normal Loop Status menu by pressing 'previous'

8.12 Engineer's Menu

Press **F5** on the second User Menu display to access the Engineer's Menu, discussed in the Next Section.

9. Operating the Engineer's Menu

Select **Eng** from the User Menu, and enter a 5-digit security key-code to open the Engineer's Menu. Unless the correct key-code is entered, the user is unable to enter the Engineers Menu. The key-code request appears on the LCD display, shown here:

```
Enter Engineers Keycode
Enter Keycode: 00000        Enter   Esc
```

The cursor appears on the first (left-hand) digit. A number is entered at that position by using **Incr (F2)** and **Decr (F1)** to increment or decrement the number. When a number has been entered, **PREVIOUS** or **NEXT** are used to step to the adjacent number on the left or right. Using the four push buttons, the correct number can be entered. To accept the code entered and to proceed, press **Enter(F5)**or **Esc(F6)**. If the code is valid, the Engineer's Menu will be entered; otherwise, an error message with a coded string of digits is displayed, like that below:

```
Enter Engineers Keycode
Wrong Keycode : 22442155 Retry      Esc
```

Press **Retry**(**F4**) to attempt another key-code entry, or **Esc**(**F6**) to return to the User Menu.

If the engineer has misplaced the key-code required to enter the Engineer's Menu, the coded number in the **Wrong Keycode** message can be used by Pertronic Industries to determine the missing key-code. Written authorisation from the building owner is required for this.

The Engineer's Menu consists of a number of soft-key options that can be selected through the bottom row of keys with sub-labels **F1** through to **F6**. For example, the first Engineer's Menu display is shown here:

```
Engineers Menu
Edit  Device  Learn  Mimic  More  Back
```

To choose the Mimic Configuration function, press **F4;** or, to choose Edit, press **F1**.

The Engineer's Menu function tree is shown below:

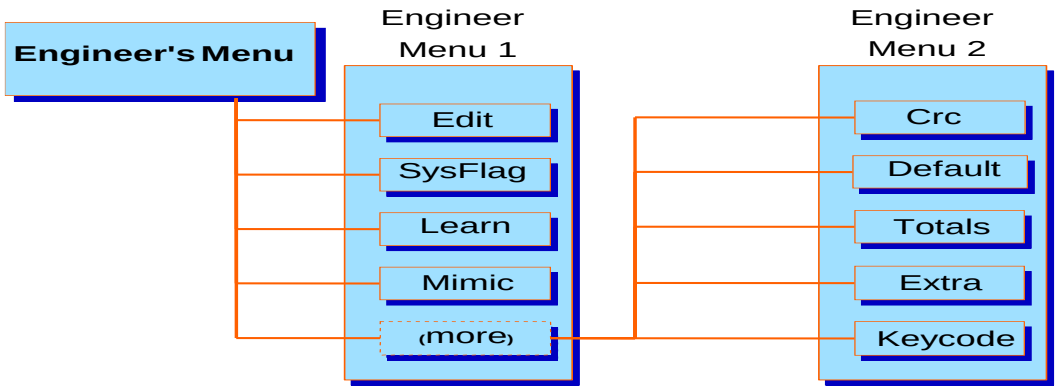

Figure 12: Engineer's Menu Function Tree

Many of the Engineer's Menu functions update or modify the non-volatile memory of the ***F100A***. Before any modification of the memory can take place, the switch **MEMORY LOCK** (located on the main ***F100A*** PCB) must be in the **OFF** position to allow memory writes.

If memory access is attempted and **MEMORY LOCK** is in the **ON** position, the warning message below is displayed:

Switch Memory Lock Off

This message prompts the user to enable memory updates by moving the switch to the **OFF** position (Disable Memory Lock). When the edit operations have been completed, the **MEMORY LOCK** switch must be returned to the ON position to disable memory updates. If this is not done, the message below will appear in System Event queue:

Memory Lock Switch Fault

This message prompts the user to move the switch to the ON position to protect the memory.

9.1 Output Mapping Details

All Input devices, Logic functions, Timers, Network Inputs, and System events can be configured to a common set of output functions; these functions are configured in the same way for all types.

Each device Output field can be configured to activate one of twenty output options, and can have 2 or 3 sub-fields, depending on the Output type. With the cursor in the first field, use the **Incr (F2)** and **Decr (F1)** to select the required output type.

9.1.1 Disabled

If the only characters displayed on the screen are those shown above, no output has been programmed; this is the default state for the outputs.

9.1.2 LED

This output option maps to one of the LED outputs on a Pertronic Industries LED Mimic PCB. In an alarm condition, the appropriate LED would be illuminated. The Pertronic Network card also uses LED outputs to map events over the network.
With the cursor in the second field use the **Incr (F2)** and **Decr (F1)** keys to select the required LED number. In the example below, LED1 is currently selected:

Led[1]

9.1.3 Loop Device

This Output Option uses three fields—Loop Number, Module/Detector, and Loop address—shown in the display line below:

LpDev L1D14

Mapping to a detector **D** will turn on that detector's LED, thus turning on any base sounder connected to that detector.

LpDev L1M03

Mapping to a module M will energise the output when the input device is in alarm.

Use **PREVIOUS** and **NEXT** keys to move to the loop, device type, or address fields; then, use **Incr (F2)** and **Decr (F1)** to select the required value.

9.1.4 Group

This Group option is used to map to a group of Output types. A group can contain up to 32 entries. Each entry can be one of the Output options described below. An alarm condition on an input mapped to a group will activate all outputs within that group.

Group[xx]

Use **PREVIOUS** and **NEXT** keys to move the cursor to the group number, and then use **Incr (F2)** and **Decr (F1)** to select the required group number. For more information on Groups, refer to Section 9.2.6: Group Edit.

9.1.5 Timer

An input mapped to a Timer will start the Timer when the input is in an 'Alarm' condition. The **F100A** has 16 Timers.

Timer[12]

Use **PREVIOUS** and **NEXT** keys to move the cursor to the Timer number, and then use **Incr (F2)** and **Decr (F1)** to select the required Timer. For more information on Timers, refer to Section 9.2.4: Timer Edit .

9.1.6 Gate

The Gate Output option is used to trigger one of the **F100A**'s 32 Logic Gates. Each Gate can be interconnected to provide a complex output algorithm.

Gate[xx]

Use **PREVIOUS** and **NEXT** keys to move the cursor to the Gate number, and then use **Incr (F2)** and **Decr (F1)** to select the required Gate number. For more information on Logic Gates, refer to Section 9.2.5: Gate Edit.

9.1.7 Local Outputs

This output option maps to one of the 15 local output functions on the **F100A**. These are described below.

9.1.7.1 Loc[00] Warning System

This local output maps to the on-board Bell1 relay output.

9.1.7.2 Loc[01] Extension Bell

This local output maps to the on-board Bell2 relay output.

9.1.7.3 Loc[02] ACF

This local output maps to the on-board ACF relay output.

9.1.7.4 Loc[03] Door

This local output maps to the on-board Door Holder relay output.

9.1.7.5 Loc[04] Fire

This local output maps to the on-board 'Fire' relay. It calls the Brigade via the Brigade Interface in an 'Alarm' condition. Note: a 'Brigade Called' event is logged to confirm that the 'Fire' relay has triggered. The 'Fire' relay is normally de-energised, and it energises in the active state.

Note that all relays on the **F100A** (apart from the Fault relay) are de-energised in the 'Normal' state.

9.1.7.6 Loc[05] GPrly

This local output maps to the on-board General Purpose relay output.

9.1.7.7 Loc[06] to Loc[13]

Mapping to Local Outputs 6 to 13 energises the relevant open-collector output on the **F100A** Master PCB. These outputs are rated 100mA @ 33Vdc each, with a maximum total loading of 250mA. The Outputs are referenced to 0V. These correspond as shown below:

- Loc[06] = OP1
- Loc[07] = OP2
- Loc[08] = OP3
- Loc[09] = OP4
- Loc[10] = OP5
- Loc[11] = OP6
- Loc[12] = OP7
- Loc[13] = OP8

9.1.7.8 Loc[14] Warning System Mute

Mapping to the "Warning System Mute' output function causes the on-board Warning System output and any Loop Relays configured as 'Warn' types to de-energise and, thus, silence when the panel is in 'Alarm'. Any subsequent alarms that are programmed in the 'Fire' queue will re-energise all 'Warn' type outputs. The input to the 'Warning System Mute' function must be a non-latching momentary switch input. Use an input module of device type 'SWCH' with latching turned OFF.

9.1.7.9 Loc[15] Non-Brigade Reset

Mapping to the 'Non-Brigade Reset' function when the panel is in 'Alarm' causes any devices in the 'Alarm' queue to Reset if the Brigade has not yet been called—that is, the 'Fire' relay has not been energised. The 'Non-Brigade Reset' function is disabled if the Brigade has been called by any device or function—an MCP or a Timer/Logic function, for example. The input to the 'Non-Brigade Reset' function can be either a Pertronic Industries Mini-Mimic panel with 'Reset' button or an input module of device type 'SWCH' with latching turned OFF.

9.1.7.10 Loc[16] Night Mode

Mapping to the 'Night Mode' function (when triggered) puts the panel into 'Night Mode' operation. In this mode the panel uses the 'Night Mode' sensitivity level as the 'Alarm' level for the analogue detectors. Note that the Global 'Day/Night' mode option must be enabled for this function.

9.1.7.11 Loc[17] Warn System Activate

Mapping to the Warning System Activate function causes the panel to energise the on board Warning System Relay and any Loop Relays programmed as Warning System Relays.

9.1.7.12 Loc[18] Warn System Isolate

Mapping to the Warning System Isolate function isolates the F100A's on-board Warning System Relay and any Loop Relays programmed as Warning System Relays.

9.1.8 Zone Isolate

This Output Function can be used to isolate any of the F100A's zones by mapping.

Output	Description
LED 001-255	Mimic Zone LED
LpDev L1-4 M/D 000-99	Loop Device Activate
Group 01-64	Activate Group
Timer 01-16	Timer Start
Gate 01-32	Input for Gate
Local [0] Warning System	Warning System relay
Local [1] Extension Bell	Extension Bell relay
Local [2] ACF	ACF relay
Local [3] Door	Door relay
Local [4] Fire	Fire relay
Local [5] GPrly	General Purpose relay
Local [6] Op1	Open-Collector Output 1
Local [7] Op2	Open-Collector Output 2
Local [8] Op3	Open-Collector Output 3
Local [9] Op4	Open-Collector Output 4
Local [10] Op5	Open-Collector Output 5
Local [11] Op6	Open-Collector Output 6
Local [12] Op7	Open-Collector Output 7
Local [13] Op8	Open-Collector Output 8
Local [14] Warning System Mute	Mute Bells
Local [15] Non Brigade reset	Reset non-brigade events
Local [16] Night mode	Night Mode select
Local [17] System Warning Sys On	System Warning System On
Local [18] System Warn Sys Isol	System Warning System Isolate
Zone [xxx] Isol	Zone xxx Isolation

Table 9.1:1: Output Type

9.2 Edit Menu

Soft-key **F1** selects the Edit sub menu.

```
                    Edit Menu
Loops  Timers  Gates  Groups  More  Back
```

The Edit Menu tree is shown below:

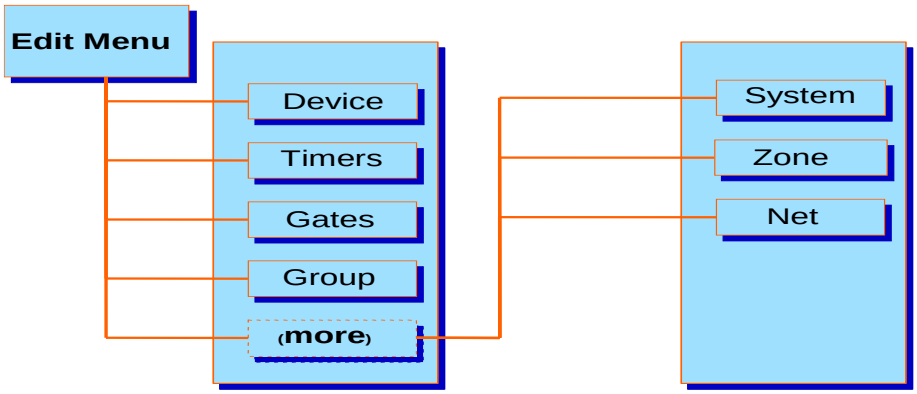

Figure 13: Edit Menu Function Tree

9.2.1 Loop Device Edit

Soft-key **F1** selects the Device Edit menu. This menu is used to add and configure, modify, or delete devices to or from an analogue loop. The Loop Number and Address select the location of the device. The Type field is used to select the device type.
A typical LCD display is shown below:

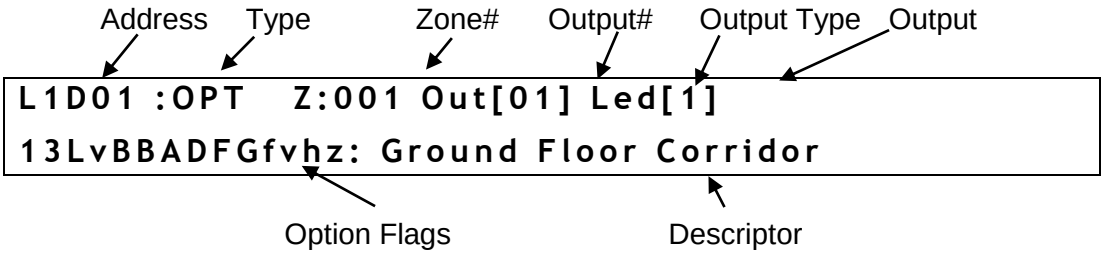

The cursor appears in the Address field (L). Press **NEXT** to move the cursor to the next field (left to right), or press **PREVIOUS** to move right to left. Use the **Incr (F2)** and **Decr (F1)** keys to change the values at the cursor position.
The field descriptions are described below:

9.2.1.1 Address

The Address field selects the required address of the device to be edited.
There are four sub-fields:

- **L1D01**

  Use **Incr (F2)** and **Decr (F1)** to cycle through loops.

- **L1D01**

  For Device or Module selection, use **Incr (F2)** and **Decr (F1)** to cycle between Detector and Module.

- **L1D01**

  Address Decade (10's). Use Incr (F2) & Decr (F1) to jump up or down ten addresses.

- **L1D01**

  Address Unit (1's). Use Incr (F2) & Decr (F1) to move up or down to the next address.

9.2.1.2 Type

Use **Incr (F2)** and **Decr (F1)** to select the required device Type.

L1D01 :OPT

Input Devices				Output Devices	
Detectors		Modules			
OPT vOPT	Optical (Photo) Smoke Detector Virtual Optical	MCP	Manual Call- Point	RLY	Auxiliary Relay
ION vION	Ionisation Smoke Detector Virtual Ion	SWCH	Switch Input	ACF	Ancillary Relay (Isolatable with ACF Isolate button)
HEAT VHEAT	Heat Detector Virtual Heat	LPRS	Loop Responder	DHR	Door Holder Relay
OMNI VOMNI	Multi-Sensor Detector Virtual OMNI	ZMU	M502 Zone Input Module	BELL	Bell Relay
LASR VLASR	Laser Detector Virtual Laser	FSW	Flow Switch	FANC	Fan Controller
ACLM VACLM	Acclimate Virtual Acclimate	VMD	Valve Monitor	FANR	Fan Relay Unit
FLTX VFLTX	Filtrex Virtual Filtrex	PSW	Pressure Switch		
BEAM	Beam	SIP	Sub Indicator Panel		
		ISO	Isolate		
		SPR	Sprinkler		
		M512	Zone Monitored Unit (Loop Powered)		

Table 9.2:1: Input and Output Device Types

FIELD	DESCRIPTION	RANGE
Address	Loop	1- 4
	Address	00 - 99
Type	Detectors D 00-99	Refer to Table 9.2:1: Input and Output Device Types
	Modules M 00-99	Refer to Table 9.2:1: Input and Output Device Types
Zone	Zone Number	001 – 128
Output	Output Number	1- 4
Output Type	Output Function	Refer to Table 9.1:1: Output Type
At	Device Location text	Up to 24 characters for a location descriptor. These are entered using a separate data entry screen.

Table 9.2:2: Input Range

9.2.1.3 Zone

Use **Incr (F2)** and **Decr (F1)** to select the required zone.

9.2.1.4 Output

Out[01]

Use **Incr (F2)** and **Decr (F1)** to select the required output number. All loop input devices have four outputs.

9.2.1.5 Output Type

This field has two or three sub-fields, depending on the selected output function. Use the **Incr (F2)** and **Decr (F1)** keys to select the required Output Type.

Led[1]

9.2.1.6 Device Option Flags

This section has up to 13 fields for Input modules—output modules have just one field. Device Option Flags set all the local options for the Detector or Module. A dash in the field indicates that the option is OFF.

There are many defined rules for Device Option flags:

- If the device is Brigade Calling, then Latching, Fire queue, Visible, Logged, and Buzzer are automatically Enabled.
- MCP's have the Latching, Fire queue, Visible, Logged, and Buzzer flags permanently enabled.
- If the device has any local relays Enabled, then the Visible, and Logged flags are also enabled.
- Turning the Visible flag OFF disables Warning System, Extension Bell, Fire Relay, and Fire queue flags.
- Turning the Logged flag OFF disables all device flags.

9.2.1.6.1 Day/Night Sensitivity

13LVWBADFGfvhz:Day-Sensitivity = 1

13LVWBADFGfvhz:Night-Sensitivity = 3

For detectors, the first two fields are the Day and Night Sensitivity levels. Use the **Incr (F2)** and **Decr (F1)** keys to change to the required level(s). Modules do not have a Sensitivity setting.

- The Default Sensitivity is 1, the most sensitive.
- Optical and Ionisation detectors have three Sensitivity settings.
- Heat detectors have four Sensitivity levels.
- Laser detectors have nine Sensitivity levels.
- Omni detectors have five Sensitivity levels.
- Acclimate detectors have six Sensitivity levels.
- Filtrex detectors have three Sensitivity levels.
- Beam detectors have one Sensitivity level.
- All virtual detectors have same sensitivity levels as the parent detector.
- If the global Day/Night mode is disabled, then incrementing one sensitivity level automatically sets the other sensitivity setting to the same level.

9.2.1.6.2 Latching

13LvBBADFGfvhz: Latching = Yes

The Latch option locks the **F100A** in 'Alarm' until Reset, if a device generates an Alarm. If Latching is OFF, the **F100A** resets as soon as the 'Alarm' condition is restored. Use **Incr (F2)** and **Decr (F1)** to toggle the Latch flag.
This example shows the latching flag disabled:

13-vBBAD-Gfvhz: Latching = No

- Device Latching is enabled by default.
- MCPs cannot be set to Non-Latching.
- LPRS can be set to Non-Latching. Note that the Reset time for a Loop-Responder can be up to 60 seconds.
- The Latching flag cannot be unset when the Fire Relay option is ON.

9.2.1.6.3 Alarm Verification Facility

13L-BBADFGfvhz: AVF = Off

If the Alarm Verification (AVF) option is enabled, the **F100A** requires two activations of an input device before signalling an Alarm. Use **Incr (F2)** and **Decr (F1)** to toggle the AVF Flag.
This example shows the AVF flag enabled:

13LvBBADFGfvhz: AVF = On

- AVF is disabled by default for all devices.
- The minimum time between 'Alarm's is 15 seconds; the maximum time is 120 seconds.
- Manual Call-Points have AVF permanently Disabled.
- Loop Responders have a separate built-in AVF function for conventional detectors. Enabling AVF for a LPRS circuit means four activations of a detector connected to LPRS input are required to signal an 'Alarm'.

  Note: Recent Loop Responders require only 3 activations if AVF is enabled on the **F100A**.

9.2.1.6.4 Alarm Verification Facility

13SvBBADFGfvhz: Brigade Latch = Yes

The Brigade Latch flag is used to latch a device in the alarm state if the brigade has been called. This is typically used when a smoke investigation period is required and the brigade is called after a delay.

- The brigade latch can only be set if the device is not brigade calling – Fire relay flag is off.

9.2.1.6.5 Warning System Relay

13LvBBADFGfvhz: Bell1 = Yes

The Warning System relay option, if enabled and the device is in 'Alarm', energises the on-board BELL1 output. Use **Incr (F2)** and **Decr (F1)** to toggle the BELL1 Flag.
This example shows BELL1 Disabled and BELL2 Enabled:

13Lv-BADFGfvhz: Bell1 = No

- Both, Warning System and Extension BELL relay options are enabled by default.
- If Warning System and Extension BELL are enabled, then 'Device Visible' is automatically set.

9.2.1.6.6 Extension BELL Relay

13LvBBADFGfvhz: Bell2 = Yes

The Extension BELL relay option, if enabled and the device is in 'Alarm', energises the on-board BELL2 output. Use the **Incr (F2)** and **Decr (F1)** to toggle the Extension BELL Flag.

This example shows Warning System enabled and Extension BELL disabled:

13LvB-ADFGfvhz: Bell2 = No

- The Warning System and Extension BELL relay options are enabled by default.
- If Warning System and Extension BELL Option is enabled the Device Visible option is also automatically set.

9.2.1.6.7 ACF Relay

13LvBBADFGfvhz: ACF Relay = Yes

The ACF Relay option, if enabled and the device is in 'Alarm', energises the on-board ACF relay. Use **Incr (F2)** and **Decr (F1)** to toggle the ACF Flag.

This example shows the ACF relay Disabled:

13LvBB-DFGfvhz: ACF Relay = No

- The ACF relay option is enabled by default.

9.2.1.6.8 Door Holder Relay

13LvBBADFGfvhz: Door Relay = Yes

The Door Holder Relay, if enabled and the device is in 'Alarm', energises the on-board Door relay. Use **Incr (F2)** and **Decr (F1)** to toggle the Door Flag.

This example shows the Door relay Disabled:

13LvBBA-FGfvhz: Door Relay = No

- Door relay option is Enabled by default.

9.2.1.6.9 Fire Relay

13LvBBADFGfvhz: Fire Relay = Yes

The Fire relay option, if Enabled and the device is in 'Alarm', energises the on-board Fire relay calling the brigade (if the **F100A** is brigade-connected). Use **Incr (F2)** and **Decr (F1)** to toggle the Fire relay flag. This example shows the Fire relay disabled:

13LvBBAD-Gfvhz: Fire Relay = No

- The Fire relay option is Enabled by default.
- If the Fire relay option is set, then the Fire queue, Visible and Logged Device options are automatically enabled, meaning that any device that calls the Brigade will appear in the Fire queue.
- A Brigade Called event is logged whenever the Fire relay is energised by any output function.

9.2.1.6.10 General Purpose Relay

```
13LvBBADFGfvhz: GP relay = Yes
```

The General Purpose Relay, if enabled and the device is in 'Alarm', energises the on-board General Purpose relay. Use **Incr (F2)** and **Decr (F1)** to toggle the General Purpose relay flag.

This example shows the GP relay Disabled (default):

```
13LvBBADF-fvhz: GP relay = No
```

9.2.1.6.11 Fire Queue

```
13LvBBADFGfvhz: Fire Queue = Yes
```

The Fire queue option, if enabled, places any 'Alarm' events for this device in the Fire queue. Use **Incr (F2)** and **Decr (F1)** to toggle the Fire queue flag. Example shows Fire queue disabled.

```
13LvBBAD-G-vhz: Fire Queue = No
```

- The Fire queue, Visible, and Logged flags are enabled by default.
- If the Fire queue option is set, then the Visible and Logged Device options are enabled.
- MCPs have the Fire queue option permanently enabled.
- Disabling the Fire queue option (for some devices) also disables the Fire relay Brigade Calling flag.

  NOTE: Devices and functional blocks with the fire queue flag set to ON will reset functional blocks such as timers and logic functions set to latching as soon as all alarm conditions in the fire queue are removed.

  For example, if a non-latching detector with fire queue set to ON activates—like a retriggerable timer set to latching and without the fire queue set—then the timer will reset when the detector alarm condition disappears.

9.2.1.6.12 Visible flag

```
13LvBBADFGfvhz: Visible = Yes
```

The Visible Device option, if enabled and the Fire Queue option is NOT set, places any 'Alarm' events for this device in the System Queue. Use Incr (F2) and Decr (F1) to toggle the Visible flag.

This example shows the visible flag Disabled:

```
13----AD-G--hz: Visible = No
```

- The Fire Queue, Visible and Logged flags are enabled by default.
- If the Visible option is set, then the Logged option is also enabled.
- Turning the Visible flag OFF also disables Bell1, Bell2, Fire relay and Fire Queue flags.
- The Visible flag is enabled for detectors and Loop Responders firmware versions v4.50 and above.

9.2.1.6.13 Logged Flag

```
13LvBBADFGfvhz: Logged = Yes
```

The Logged option, if enabled, records any 'Alarm' events in the Event Log. If the Fire queue option is enabled, the event is recorded in the Fire Log; otherwise, the 'Alarm' events are recorded in the System Log. Use **Incr (F2)** and **Decr (F1)** to toggle the Logged flag.

This example shows the Logged flag disabled:

```
13----------: Logged = No
```

- The Fire Queue, Visible and Logged flags are Enabled by default.

- The Logged option is automatically set if either the Fire queue or Visible Device options are enabled; conversely, if Logged is OFF then all other device flags are cleared.
- Turning the Logged flag OFF disables all device option flags.

9.2.1.6.14 Buzzer Flag

```
13LvBBADFGfvhz:Buzzer = Yes
```

The Buzzer option, if enabled, causes the internal buzzer to sound on all LCD Mimics connected to the **F100A**, if the device is in Alarm. Use **Incr (F2)** and **Decr (F1)** to toggle the Buzzer Flag. This example shows the Buzzer flag disabled:

```
13LvBBADFGfvh-:Buzzer = No
```

- The Buzzer option is enabled by default.
- The Buzzer option automatically enables the Logged and Visible Device options and Fire Queue.

9.2.2 Loop Relays

For relays, the only device flag option is the Monitored flag. If set, the relay's End-of-Line (EOL) resistor is monitored, and any Faults are logged.

```
M          :Monitored = Yes
```

Use **Incr (F2)** and **Decr (F1)** to toggle the monitor flag. This example shows End-of-Line monitoring disabled:

```
-          :Monitored = No
```

9.2.3 Descriptor Editing

Press soft-key **F5** to edit the Device Descriptor. A typical LCD display is shown below:

```
      Text Editor "L1 D01 DESCRIPTOR      "
char-  char+  Case  AL/Num  WORD  EXIT
```

To enter or change the location text—up to 24 characters—use these instructions:

- Use **PREVIOUS** and **NEXT** to move the cursor to the desired character.
- Soft-keys **F1 (char-)** and **F2 (char+)** change the character at the cursor position.
- The character set includes the following:
  A B C...X Y Z [/] ^ _ ` a b c...x y z [space] ! " # $ % & ' ( ) * + , - . / 0 1...8 9 : ; < = > ? @ A B C...
- Soft-key **F3 (Case)** toggles between upper and lower case of the character at the current cursor position.
- Soft-key **F4 (AL/Num)** selects either an alpha or numeric character or a space at the cursor position. Sequential presses display the characters: **a, 1,** [space], **a, 1,** [space], **a,** and so forth, at the cursor position.
- Soft-key **F5 (Word)** Inserts these pre-defined words at the current cursor position: **First, Second, Third, Floor, Basement, Kitchen, Bedroom, Stairs,** and **Corridor**.

9.2.4 Timer Edit

The **F100A** has 16 programmable Timers. Each Timer has a Run and Timer Complete programmable output, with Cycle, One-Shot, Recycle, and Double Knock modes of operation. The Timer Delay can be set from 1 second to 34 minutes (2048 seconds). From the Edit menu soft-key **F2** selects the Timer Edit menu, which is used to configure the 16 programmable Timers.
A typical LCD display looks like the following screen:

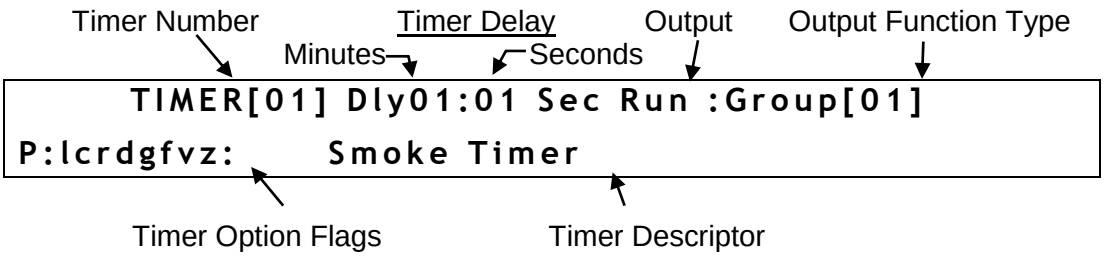

The cursor appears in the Timer Number field. The cursor is moved to the next field (left to right) by pressing **NEXT,** or to the previous field by pressing **PREVIOUS.** Use the **Incr (F2)** and **Decr (F1)** keys to change the values at the cursor position.

The Field descriptions are explained in the following sections.

9.2.4.1 Timer Number

Use the **Incr (F2)** and **Decr (F1)** keys to select the required Timer. The **F100A** supports 16 programmable Timers, e.g. **Timer[01]**

9.2.4.2 Timer Delay

Use the **Incr (F2)** and **Decr (F1)** keys to increase or decrease the Timer Delay period. The Delay can be from 1 second to 34 minutes (2048 seconds).

Dly01:01

9.2.4.3 Output

Run This output activates when the Timer has been triggered and is counting down.

TimedOut This output activates when the Timer Delay has reached zero.

9.2.4.4 Output Type

Timer Output mapping is the same as other output options. This field has sub-fields, depending on the selected output function: Use the **Incr (F2)** and **Decr (F1)** keys to select the required Output Type

Led[1]

Refer to Section 9.1: Output Mapping Details for the Output Type options.

9.2.4.5 Timer Option Flags

Each timer has eight option flags. Use the **PREVIOUS** and **NEXT** keys to scroll through the flags. Use soft-keys **Incr (F2)** or **Decr (F1)** to Enable or Disable the required option. A dash '**-** ' indicates that the relevant option is Disabled.

9.2.4.5.1 Latching

P:lcrdgfvz

With the Latching option enabled, the Timer continues to run if the input trigger has been removed.

- At the end of the Delay Period, the TimerComplete output activates.
- If the Latching option is Disabled, the TimerComplete output becomes active at the end of the Delay Period for as long as the Timer is triggered; it resets when the input trigger is removed.
- Latching is enabled if Retrigger mode is enabled.

9.2.4.5.2 Cycle

P:lcrdgfvz

With the Cycle option enabled, the Timer re-loads the Delay Time at the end of the Delay Period and continues to count down. The TimerRun and TimerComplete outputs activate alternately.

- If Latching is Enabled, the Timer runs until reset or resets once the input condition is removed.

9.2.4.5.3 Retrigger

P:lcrdgfvz

In Retrigger mode, the Timer continues to run even if the input is removed. However, if the Timer input is re-activated, the Timer Delay Period is re-loaded, and countdown restarts until completed (or restarted)

- The Latching option is Enabled when the Timer retrigger option is set.

9.2.4.5.4 Double-Knock

P:lcrdgfvz

With Double Knock mode Enabled and two or more activations to the Timer, the Timer Delay Period is over-ridden, and the TimerComplete output activates.

- If the Latching option is enabled, the TimerComplete output is True until the Timer is reset; otherwise, the Timer is reset as soon as both inputs are removed.

9.2.4.5.5 Logged

P:lcrdgfvz

If the Logged option is set, the TimerRun and TimerComplete events are recorded in the Event Logs.

- If the Fire queue option flag is set, then the TimerRun and TimerComplete events are recorded in the Fire log; otherwise, the event is recorded in the System Event log.

9.2.4.5.6 Fire Queue

P:lcrdgfvz

With Fire queue set, TimerRun and TimerComplete events are in the Fire queue display and Event Logs.

- If the Fire queue option flag is set, then the Visible and Logged options are automatically enabled.

9.2.4.5.7 Visible

P:lcrdgfvz

With the Visible option set and Fire Queue option Disabled, the TimerRun and TimerComplete events are recorded in the System Queue display and System Event log.

- If the Fire Queue option flag is set, then the Visible and Logged options are automatically Enabled.

9.2.4.5.8 Buzzer

P:lcrdgfvz

With the Buzzer option set when the Timer is triggered, the internal buzzers on LCD Mimics connected to the **F100A** will sound.

- If the Fire Buzzer option is enabled, then the Logged and Visible device option flags and the Fire Queue option flags are automatically enabled.

9.2.4.6 Timer Descriptor

Press soft-key **F5** to edit the Timer Descriptor. The edit method is identical to that for Loop devices. Refer to Section 9.2.3: Descriptor Editing.

9.2.4.7 Timer Mode Description

9.2.4.7.1 Normal Timer Mode: Latching, Cycle, Double-Knock, Retrigger all OFF

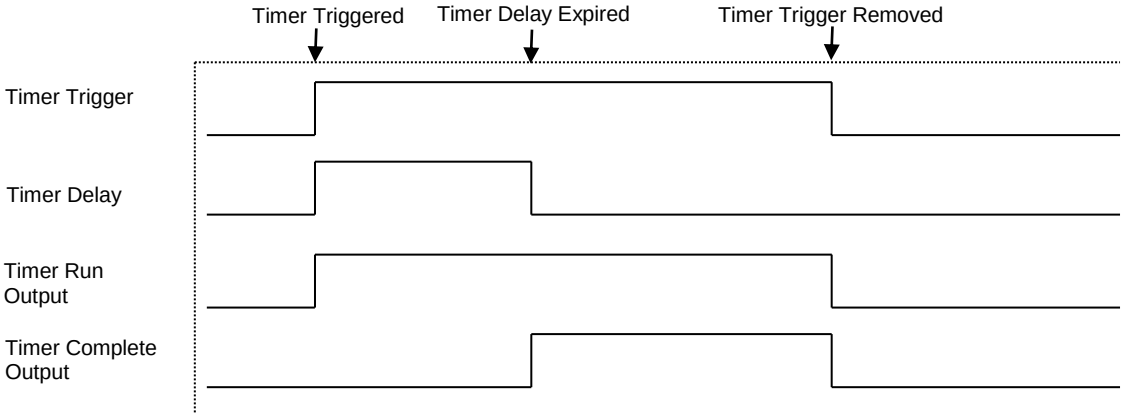

9.2.4.7.2 Normal Timer Mode: Latching ON, Cycle, Double-Knock, Retrigger all OFF

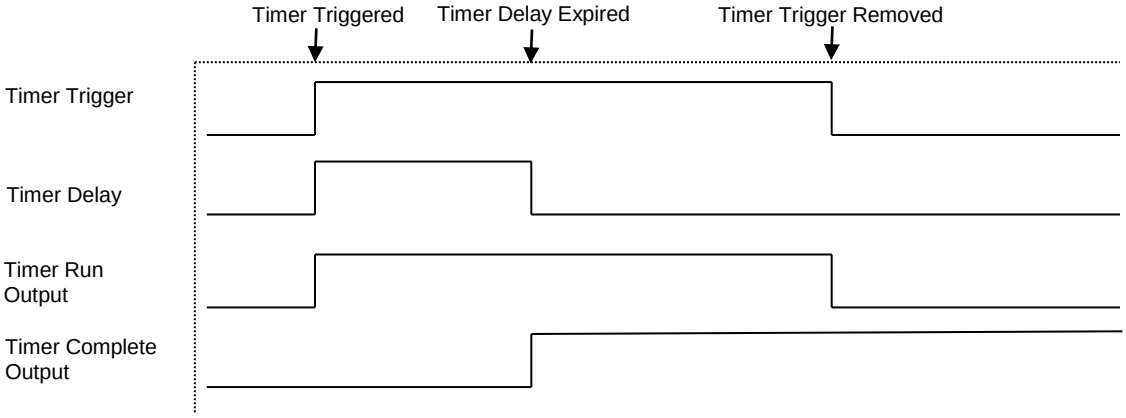

9.2.4.7.3 Cycle Timer Mode: Latching, Double-Knock, Retrigger all OFF

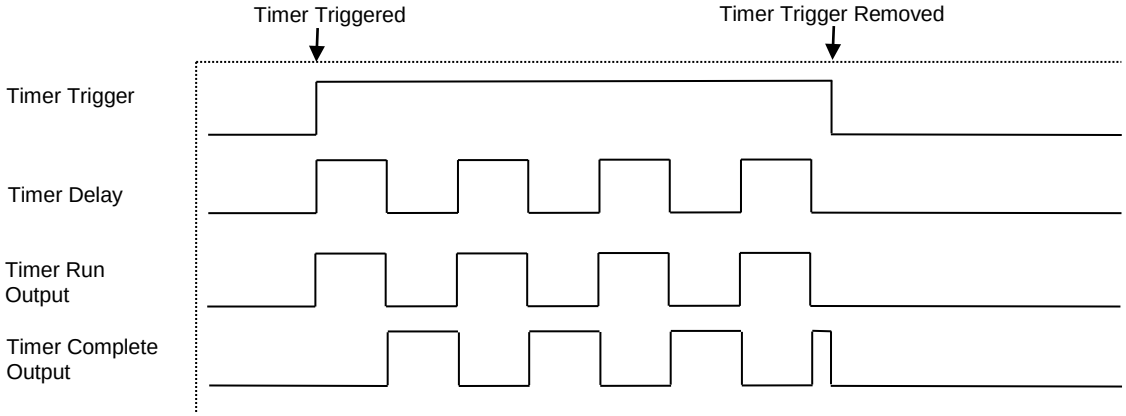

9.2.4.7.4 Retrigger Timer Mode: Latching ON, Cycle and Double-Knock OFF

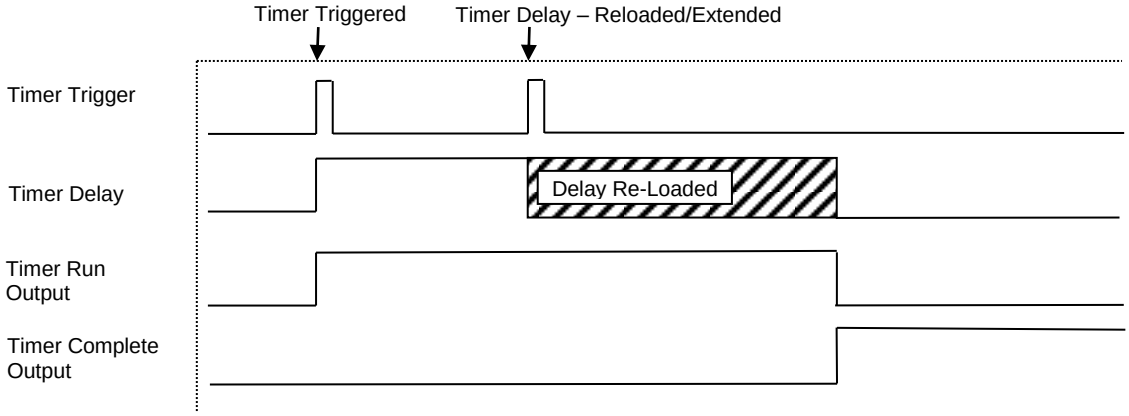

9.2.4.7.5 Double-Knock Timer Mode: Latching and Cycle OFF

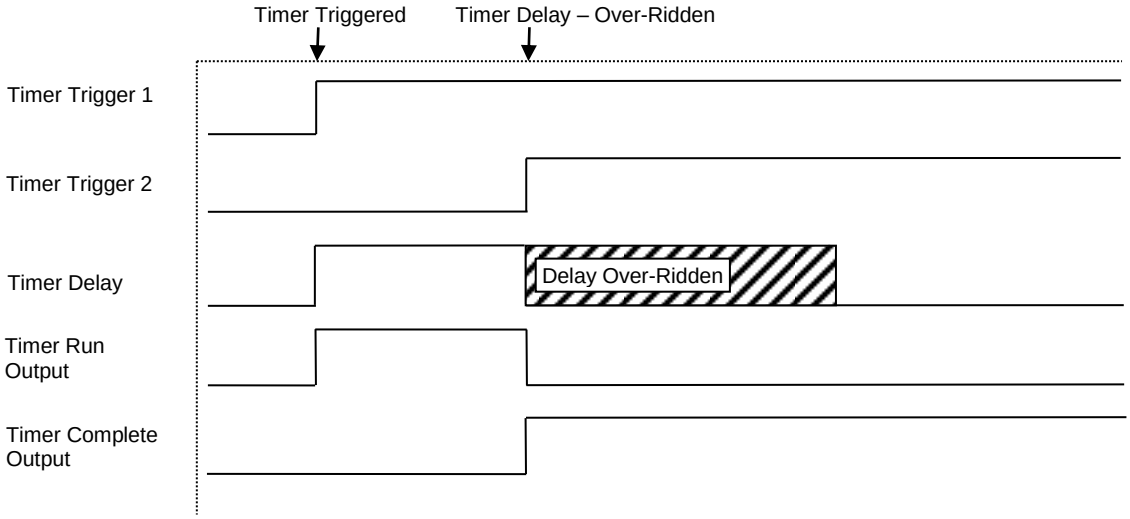

9.2.5 Gate Edit

From the Edit menu, soft-key **F3** is the Gate edit menu. The **F100A** has 32 programmable Logic Gates. Each gate has two configurable outputs which activate if the Gate functions are True. This menu is used to configure the 32 programmable Logic Gates.
A typical LCD display is shown here:

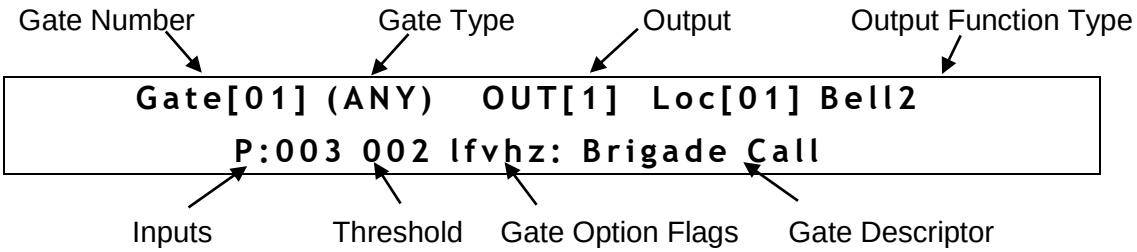

The cursor appears in the Gate Number field. Move the cursor to the next field (left to right) by pressing **NEXT,** or to the previous field by pressing **PREVIOUS.** Use the **Incr (F2)** and **Decr (F1)** keys to change the values at the cursor position.
The field descriptions are defined in the sections below.

9.2.5.1 Gate Number

Gate[01]

Use the **Incr (F2)** and **Decr (F1)** keys to select the required gate. The **F100A** supports 32 Gates.

9.2.5.2 Gate Type

Use the **Incr (F2)** and **Decr (F1)** keys to select the required output function type. The functions available are shown in the table:

Type	Function
AND	This function requires ALL inputs that are mapped to the gate to be active for the gate's output(s) to be activated.
NAND	ALL inputs that are mapped to the gate must be normal for the output to be active
NOT	The 'NOT' function gate output is active when all its inputs are normal (usually only one input).
ANY	The 'ANY' function is similar in operation to the 'AND' gate, but its output functions are active if a preset number of inputs is exceeded. The gate threshold can be set from 1 to the number of devices mapped to the gate.
OR	The 'OR' function gate output are true If ANY of its mapped inputs are active.

Table 9.2:3: Logic Gate Output Functions

9.2.5.3 Output

Out[01]

Use **Incr (F2)** and **Decr (F1)** to select the required output. Each gate has two configurable outputs.

9.2.5.4 Output Type

The Gate Output mapping is the same as other output options. This field has two or three sub-fields, depending on the selected output function. Use the **Incr (F2)** and **Decr (F1)** keys to select the required Output Type.

Led[1]

9.2.5.5 Inputs

003

This field displays the number of input devices or other Gates/Timers currently mapped to the Gate.

9.2.5.6 Threshold

002

This field displays the current threshold if the gate is an ANY type. Use the **Incr (F2)** and **Decr (F1)** to select the required Gate Threshold (number of inputs).

- For Gate types other than ANY, the threshold field is disabled.

9.2.5.7 Gate Option Flags

9.2.5.7.1 Latching

P:lfvhz

With the Latching option enabled, the Gate remains active until Reset.

9.2.5.7.2 Fire Queue

P:lfvhz

With the Fire Queue option set, the Gate active event is recorded in the Fire Queue display and Fire Event Log.

- If the Fire Queue option flag is set, then the Visible and Logged options are automatically enabled.

9.2.5.7.3 Visible

P:lfvhz

With the Visible option set, and Fire Queue option disabled, the Gate active event is recorded in the System Queue display and System Event Log.

- If the Fire Queue option flag is set, then the Visible and Logged options are automatically enabled.

9.2.5.7.4 Logged (History)

P:lfvhz

If the Logged option is set the Gate active event is recorded in the Event Log.

- If the Fire Queue option flag is set, then the Gate active event is recorded in the Fire log; otherwise, the event is recorded in the System Event log.

9.2.5.7.5 Buzzer

P:lfvhz

With the Buzzer option set, the Gate active event causes the internal buzzers on all LCD Display units and LCD mimics connected to the **F100A** to sound.

- If the Fire Buzzer option is enabled, then the Logged and Visible device options are automatically Enabled.

9.2.6 Group Edit

Soft-key **F4** in the Edit menu accesses the Group edit menu. A typical display on the LCD isshown here:

```
                    Edit Group
Group:[01] (01) Output: Led[01]
```

Group Number Entry Number Output Type

Initially the cursor is in the Group-Number field and can be moved left or right to the next field by using the **PREVIOUS** and **NEXT** keys. Use soft-keys **Incr (F2)** and **Decr (F1)** to increment or decrement the value at the cursor position.
The field descriptions are explained in the following sections.

9.2.6.1 Group Number

Group[01]

This indicates the current Group number. The **F100A** has up to 64 Groups.

9.2.6.2 Entry Number

(01)

This indicates the Entry number. The **F100A** allows up to 32 entries per group.

9.2.6.3 Output Type

The Group mapping is identical to other output options. This field has two or three sub-fields, depending on the selected output function: Use the **Incr (F2)** and **Decr (F1)** keys to select the required Output Type

```
Led[1]
```

Refer to Section 9.1: Output Mapping Details for the Output Type options.

9.2.7 Edit – More Sub-Menu

Soft-key **F5** from the main Edit Menu opens a sub-menu containing the remaining Edit options, shown here:

```
            Edit Menu
System Zone  Net 24hTimers        Back
```

9.2.7.1 System – Common System Events / Outputs Configuration

Press soft-key **F1** from the edit **More** sub-menu to open the System Options edit menu.

The **F100A** has a fully programmable on-board Sprinkler input and 15 programmable Common Output functions. Each output function has four programmable outputs that can be set to one of the common output types as described in Table 9.1:1: Output Type. These output functions allow much simpler and more flexible 'Alarm' programming algorithms to be used. Initially, the cursor is in the Local Input number field and can be moved left or right to the next field by using the **PREVIOUS** and **NEXT** keys. Use soft-keys **Incr (F2)** and **Decr (F1)** to increment or decrement the value at the cursor position, and press **Enter (F5)** to edit the descriptor.

A typical Local MCP Edit Display looks like the one below:

Input Number Type Zone Output Number Output Function

```
Sy[01] (LocalMCP) Z:001 Out[1]Led[1]
P:  -vBBAD-Gfvhz:  Local MCP Input
```

Option Flags Descriptor

The 15 System events functions are all programmed in a similar method. A typical LCD display is shown here:

Input Number Type Output Function

```
Sy[02] (C.Fire)        Out [1] Led[1]
```

Each system event has four programmable outputs. They are programmed identically to input devices. This field has two or three sub fields depending on the selected output function. Use the **Incr (F2)** and **Decr (F1)** keys to select the required Output Type.

```
Led[1]
```

Refer to Section 9.1: Output Mapping Details for the Output Type options.

9.2.7.1.1 Local MCP Sy[01] (MCP)

This allows the on-board local MCP input to be configured. This input is configured in the same manner as a Loop Input device. Refer to Section 9.2.1: Loop Device Edit for more information.

The default configuration for the Local MCP Input is shown in Table 9.2:4 below:

Configuration Field	Default Value	Allowable Range
Zone	000	000 – 128
Latching	ON	Latching / Non latching
AVF	---	AVF not allowed
BELL1, 2	Both ON	Selectable ON or OFF
ACF	ON	Selectable ON or OFF
Door Holder	ON	Selectable ON or OFF
Fire	OFF	Always OFF
G P Relay	Off	Selectable ON or OFF
Fire Queue	ON	Always ON
Visible	ON	Always ON
Logged	ON	Always ON
Buzzer	ON	Always ON

Table 9.2:4: Default Local MCP Input Configurations

9.2.7.1.2 Common Fire Output Sy[02] (C.FIRE)

Active if any device is in 'Alarm' and is in the Fire Queue.

9.2.7.1.3 Common Manual Call-Point Alarm Output Sy[03] (MCP.AL)

Active if any device programmed as an MCP is in 'Alarm', or a conventional MCP connected to a **Pertronic** Loop Responder (LPRS) is in 'Alarm'.

9.2.7.1.4 Common Detector Alarm Output Sy[04] (DET.Al)

Active if any analogue detector is in 'Alarm', or a conventional detector connected to a **Pertronic** Loop Responder (LPRS) is in 'Alarm'.

9.2.7.1.5 Common Fault Output Sy[05] (Fault)

Active if the **F100A** is in 'Fault'.

9.2.7.1.6 Common Isolate Output Sy[06] (C.Isol)

Active if any Input or Output device, Zone, Timer, Gate, or Network Input, is isolated.

9.2.7.1.7 Common Pre-Alarm Output Sy[07] (PreAl)

Active if any analogue detector connected to the **F100A** is in 'Pre-Alarm'.

9.2.7.1.8 Warning System ON Output Sy[08] (Evac)

Active if the **F100A** is in the Evacuate mode. This can be either mapped as an output event or enabled by pushing **Warning System ON,** on the AAF or on any polled LCD or LED mimics connected.

9.2.7.1.9 Common Acknowledge Output Sy[09] (Ack)

Active if the **F100A** has any 'Alarm' conditions or events that have been acknowledged by the operation of **ACK** push-button.

9.2.7.1.10 Common Sprinkler Alarm Output Sy[10] (SPR Al)

Active if the on-board SPR input, or any input module configured as an SPR input device, is in 'Alarm'.

9.2.7.1.11 Common Reset Output Sy[11] (Reset)

Active for a minimum of 5 seconds if a device or zone has been Reset either from the Fireman's control or from the Reset option in the User menu. If a **Pertronic** Loop Responder (LPRS) has been reset, the output can be active for up to 90 seconds.

9.2.7.1.12 Common Buzzer Output Sy[12] (Buzz)

Active if the buzzer on the **F100A** LCD Display is sounding.

9.2.7.1.13 Common Bell Isolate Output Sy[13] (BellIsl)

Active if the **Silence Alarms** button on the **F100A** LCD Display is currently active. It is not active for the Brigade Use Only Silence Alarms key-switch.

9.2.7.1.14 Common ACF Isolate Output Sy[14] (ACFIsl)

Active if the **ACF Isolate** button on the **F100A** LCD Display has isolated the ACF relays.

9.2.7.1.15 Common Mains Failure Output Sy[15] (MainsFl)

Active if the 230Vac supply has been disconnected from the **F100A.**

9.2.7.1.16 Common Door Open Output Sy[16] (DoorOpn)

Active if the **F100A** cabinet door is open.

9.2.7.1.17 Common Heat Detector Alarm Sy[17] (Heat.Al)

Active if a Heat or Acclimate detector in heat only mode (level 6) is in Alarm.

Option	Description
Sy[01] (SPR)	Common Sprinkler Input.
Sy[02] (C.Fire)	Common Fire Output.
Sy[03] (MCP.Al)	Common Manual Call Point Alarm Output.
Sy[04] (DET.Al)	Common Detector Alarm Output.
Sy[05] (Fault)	Common Fault Output.
Sy[06] (C.Isol)	Common Isolate Output.
Sy[07] (PreAl)	Common Pre-Alarm Output.
Sy[08] (Evac)	Common Evacuate Output.
Sy[09] (Ack)	Common Alarm Acknowledge Output.
Sy[10] (SPR Al)	Common Sprinkler Alarm Output.
Sy[11] (Reset)	Common Reset Output.
Sy[12] (Buzz)	Common Buzzer Output.
Sy[13] (WarnSysl)	Common Silence Alarms Output.
Sy[14] (AcfIsl)	Common ACF Isolate Output.
Sy[15] (MainsFl)	Common Mains Failure Output.

Option	Description
Sy[16] (DoorOpn)	Common Door Open Output.
Sy[17] (Heat.Al)	Common Heat Detector Alarm

Table 9.2:5: System Options

9.2.7.2 Zone – Zone Editor

Press soft-key **F2** from the Edit / More sub-menu to access the Zone editor menu. The **F100A** has 128 zones with 24-character descriptors. Each Zone has four output registers, each active in a particular zone state:

- Alarm: Active when the Zone is in alarm.
- Fault: Active When the Zone is in Fault.
- Isol: Active When the Zone is Isolated.
- Isol.Alarm : Active when the Zone is Isolated and in Alarm.

They are programmed identically to input devices. Each field has two or three sub-fields, depending on the selected output function. Use the **Incr (F2)** and **Decr (F1)** keys to select the required Output Type.
To select the required output, use the cursor key to move the cursor over the output function, and use **Incr (F2)** and **Decr (F1)** to select the required output function and mapping.

Use Edit (F5) to edit the Zone Descriptor. The text edit method is identical to that for Loop devices. Refer to Section 9.2.3: Descriptor Editing.

```
Zone[001]:Alarm     Gate[01]
Desc: Zone 001 Descriptor
```

9.2.7.3 Net - Network Edit

Press soft-key **F3** from the Edit / More sub-menu to access the Network editor menu.
The **F100A** supports networking. This allows up to 128 **F100A** or **F120A** fire alarm panels to be interconnected, allowing indications and signalling of 64 selected Alarm and other events to be reported to selected panels. Network inputs are configured in a similar method to loop-devices. A typical screen is shown below:

Network Input Zone Output Output Type Output Index

```
Net Input [01] Z:001 Out[1]Led[01]
P: L-BBADFGfvhz: Factory 2 Panel Alarm
```

Option Flags Descriptor

The cursor appears in the Network input field. The cursor is moved to the next field (left to right) by pressing **NEXT,** or to the previous field by pressing **PREVIOUS.** Use the **Incr (F2)** and **Decr (F1)** keys to change the values at the cursor position.
The field descriptions are described in the following sections:

9.2.7.3.1 Network Input.

- **Net[01]**

  This field is used to select the required network input to be edited.

  Use Incr (F2) and Decr (F1) to select the required input.

9.2.7.3.2 Zone

Use **Incr (F2)** and **Decr (F1)** to select required zone.

9.2.7.3.3 Output

```
Out[01]
```

Each Network input has four programmable outputs.
Use **Incr (F2)** and **Decr (F1)** to select the required output number.

9.2.7.3.4 Output Type

Each network input has four programmable outputs; they are programmed identically to input devices. Each field has two or three sub-fields, depending on the selected output function: Use the **Incr (F2)** and **Decr (F1)** keys to select the required Output Type.

Led[01]

Refer to Section 9.1: Output Mapping Details for the Output Type options.

9.2.7.3.5 Network Option Flags

11 fields are provided to set the local options for network inputs. A dash indicates that the option is OFF.

There are many built-in rules for these flags:

- If the network input is Brigade-calling, then Latching, Fire Queue, Visible, Logged, and Buzzer are automatically enabled.
- If the network input has any local relays enabled, then the Visible and Logged flags are also enabled.
- Turning the Visible flag OFF disables Bell1, Bell2, Fire Relay, and Fire Queue flags.
- Turning the Logged flag OFF disables all device flags.

9.2.7.3.5.1 Latching

P: L-BBADFGfvhz: Latching = Yes

If latching is ON and a device generates a Network Event, the **F100A** remains in 'Alarm' until Reset.

If latching is OFF, the **F100A** resets as soon as the condition is restored.

Use **Incr (F2)** and **Decr (F1)** to toggle the latching Flag. The example below shows the latching flag disabled:

P: --BBAD-Gfvhz: Latching = No

- Device latching is enabled by default.
- The Latching option flag cannot be disabled when the Fire Relay option is ON.

9.2.7.3.5.2 Warning System Relay

P: L-BBADFGfvhz: Warning System = Yes

If the Warning System relay is enabled and the input event is active, the Warning System relay energises. Use the **Incr (F2)** and **Decr (F1)** to toggle the Warning System flag. The example below shows Warning System disabled

P: L--BADFGfvhz: Warning System = No

- The Warning System and Extension Bell relay options are enabled by default.
- If either Warning System or Extension Bell is enabled, the Device Visible option is also permanently set.

9.2.7.3.5.3 Extension Bell Relay

P: L-BBADFGfvhz: Extension Bell = Yes

If the Extension Bell relay is enabled, and the input event is active, the Extension Bell relay energises. Use the **Incr (F2)** and **Decr (F1)** to toggle the BELL 2 flag. The example below shows Extension Bell Disabled:

P: L-B-ADFGfvhz: Extension Bell= No

- The Warning System and Extension Bell relay options are enabled by default.
- If Warning System and Extension Bell Option is enabled the Device Visible option is automatically set.

9.2.7.3.5.4 ACF Relay

```
P: L-BBADFGfvhz: ACF Relay = Yes
```

If the ACF relay option is enabled (default) and the input event is Active, the on-board ACF relay energises. Use the **Incr (F2)** and **Decr (F1)** to toggle the ACF flag. The example below shows the ACF relay disabled:

```
P: L-BB-DFGfvhz: ACF Relay = No
```

9.2.7.3.5.5 Door Relay

```
P: L-BBADFGfvhz: Door Relay = Yes
```

If the Door Holder relay option is enabled (default) and the input event is active, on-board Door Holder relay energises. Use **Incr (F2)** and **Decr (F1)** to toggle the Door flag. The example below shows the Door relay disabled:

```
P: L-BBA-FGfvhz: Door Relay = No
```

9.2.7.3.5.6 Fire Relay

```
P: L-BBADFGfvhz: Fire Relay = Yes
```

If the Fire relay option is enabled (default) and the input event is active, the on-board Fire relay energises, calling the Brigade (if the **F100A** is Brigade-connected). Use **Incr (F2)** and **Decr (F1)** to toggle the Fire relay flag. The example below shows the Fire relay disabled:

```
P: L-BBAD-Gfvhz: Fire Relay = No
```

- If the Fire relay option is set, then the Fire Queue, Visible, and Logged Device options are automatically Enabled; therefore, any input that calls the Brigade must appear in the Fire queue.
- A Brigade Called event is logged whenever the Fire relay is energised by any output function.

9.2.7.3.5.7 General Purpose Relay

```
P: L-BBADFGfvhz: GP relay = Yes
```

If the General Purpose (GP) relay is enabled (default = disabled) and the input event is active, the on-board General Purpose relay energises. Use **Incr (F2)** and **Decr (F1)** to toggle the General Purpose relay flag. The example below shows the GP relay disabled:

```
P: L-BBADF-fvhz: GP relay = No
```

9.2.7.3.5.8 Fire Queue

```
P: L-BBADFGfvhz: Fire Queue = Yes
```

If the Fire Queue option is enabled, any Active inputs are placed in the Fire Queue. Use **Incr (F2)** and **Decr (F1)** to toggle the Fire Queue flag. The example below shows the Fire Queue disabled:

```
P: L-BBAD-G-vhz: Fire Queue = No
```

- The Fire Queue, Visible, and Logged flags are enabled by default.
- If the Fire Queue option is set, then the Visible and Logged Device options are enabled.
- MCP's have the Fire Queue option permanently enabled.

- Where the Fire Queue option can be disabled, it also disables the Fire Relay and Brigade-Calling flag.

9.2.7.3.5.9 Visible flag

```
P: L-BBADFGfvhz: Visible = Yes
```

If the Visible Device option is enabled and the Fire Queue option is **NOT** set, any Active input events are placed in System Queue. Use **Incr (F2)** and **Decr (F1)** to toggle the visible flag. The example below shows the visible flag disabled:

```
P: ----AD-G--hz: Visible = No
```

- The Fire Queue, Visible, and Logged flags are Enabled by default.
- If the Visible option is set, then the Logged Device options are also enabled.
- Turning the Visible flag OFF disables Warning System, Extension Bell, Fire relay, and Fire Queue flags.

9.2.7.3.5.10 Logged Flag

```
P: L-BBADFGfvhz: Logged = Yes
```

If the Logged option is enabled, any Active input events are recorded in the **F100A** Event Log. If the Fire Queue option is enabled, the event is recorded in the Fire Log, otherwise 'Alarm' events are recorded in the System Log. Use **Incr (F2)** and **Decr (F1)** to toggle the Logged flag. The example below shows the Logged flag disabled:

```
P: ----------: Logged = No
```

- The Fire Queue, Visible, and Logged flags are Enabled by default.
- The Logged option is automatically set if either the Fire Queue or Visible device options are Enabled; conversely, if Logged is OFF, then all other device flags are cleared.
- Turning the Logged flag OFF disables all device option flags.
- For firmware version v4.50 on, the Logged flag is enabled for detectors and Loop Responders.

9.2.7.3.5.11 Buzzer Flag

```
P: L-BBADFGfvhz:Buzzer = Yes
```

If the Buzzer option is enabled and the input is active, the internal buzzer sounds on all LCD Mimics connected to the **F100A**. Use **Incr (F2)** and **Decr (F1)** to toggle the Buzzer flag. The example below shows the Buzzer flag disabled:

```
P: L-BBADFGfvh-:Buzzer = No
```

- The Buzzer option is enabled by default.
- The Buzzer option automatically enables the Logged and Visible Device options and Fire Queue.

9.2.7.4 24 Hour Timers

Press soft-key **F4** from the Edit / More sub-menu to access the 24-Hour Timer Edit menu.

F100A versions v4.54 and above include 24-Hour Timers to support Detector Day/Night mode operation. Four 24-Hour Timers are available, each with separate Start and Stop times; The Timers can be configured to operate on weekdays only, on weekends only, both weekdays and weekends, or never. Each Timer has two configurable outputs and can be configured for Visible and Logged modes.

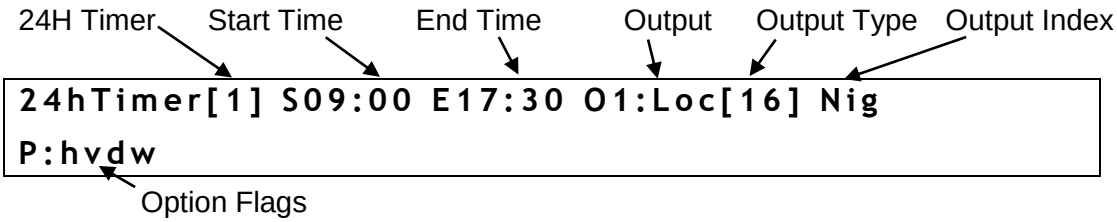

The cursor appears in the 24H Timer Number field. The cursor is moved to the next field (left to right) by pressing **NEXT,** or to the previous field by pressing **PREVIOUS.** Use the **Incr (F2)** and **Decr (F1)** keys to change the values at the cursor position.
The Field descriptions are described in the following sections.

9.2.7.4.1 24-Hour Timer Number

Use the **Incr (F2)** and **Decr (F1)** keys to select the required Timer. The **F100A** supports 4 Programmable 24-Hour Timers.

24hTimer[1]

9.2.7.4.2 Start Time - Hour

Use the **Incr (F2)** and **Decr (F1)** keys to increase or decrease the Start Time hour. The times are shown in 24-Hour format for Start Time and for those following it.

S:09:00

9.2.7.4.3 Start Time - Minute

Use the **Incr (F2)** and **Decr (F1)** keys to increase or decrease the Start Time minute.

S09:00

9.2.7.4.4 End Time - Hour

Use the **Incr (F2)** and **Decr (F1)** keys to increase or decrease the End Time hour.

E:17:45

9.2.7.4.5 End Time - Minute

Use the **Incr (F2)** and **Decr (F1)** keys to increase or decrease the End Time minute.

E17:45

9.2.7.4.6 Outputs

Use the **Incr (F2)** and **Decr (F1)** keys to select the two configurable outputs for each Timer. Each output is activated when the current system time is between the Start and End times of the Day-Timer.

[1] Output 1
[2] Output 2

9.2.7.4.7 Output Type

The 24HTimer output mapping is the same as for inputs. This field has two or three sub-fields, depending upon the selected output function. Use the **Incr (F2)** and **Decr (F1)** keys to select the required Output Type.

Led[01]

Refer to Section 9.1: Output Mapping Details for the Output Type options.

9.2.7.4.8 24H Timer Option Flags

Each 24-Hour Timer has four option flags. Use the **PREVIOUS** and **NEXT** keys to scroll through the flags, and then use soft-keys **Incr (F2)** or **Decr (F1)** to enable or disable the required option. A dash ('**-**') indicates that the relevant option is disabled.

9.2.7.4.8.1 Logged

```
P:hvdw          :Logged = Yes
```

With the Logged option Enabled, the 24-Hour Timer events are recorded in the System Event log.

- Logging is automatically Enabled if the Visible option is set.

9.2.7.4.8.2 Visible

```
P:hvdw          :Visible = Yes
```

With the Visible option Enabled, the 24-Hour Timer events are recorded in the System Event log and displayed on the **F100 LCD**.

9.2.7.4.8.3 Weekday Mode

```
P:hvdw          :Monday to Friday=Yes
```

With the Weekday option set, the 24-Hour Timer activates if the current system time is within the Day-Timer Start and End times and it is a Weekday.

9.2.7.4.8.4 Weekend mode

```
P:hvdw          :Saturday & Sunday= Yes
```

With the Weekend option set, the 24-Hour Timer activates if the current system time is within the Day-Timer Start and End times and it is a Weekend.

9.3 SysFlag – System Flags Menu

Soft-key **F2** selects the System Flag menu. Seven flags can be set for Australia. The first Flag, Flag[1], appears in the menu with the initial press of F2; each subsequent Flag appears in turn with each press of F2. Use F1(Decr) or F2(incr) to cycle through the various flag options. Pressing F2 displays the next flag. Pressing F6 exits the menu. The first is shown below:

9.3.1 24 Hour Test

```
Flag[1] Device Test (8am) :ON
                                    Toggle Exit
```

Press F5 (toggle) to enable or disable. This flag, when set, causes the ***F100A*** to do an automatic detector test at 8am every day. This is the default mode of operation. Note that the ***F100A*** will do a one-hour charger test at 8am irrespective of the state of the 8am test flag. **The 8am flag is re-enabled automatically every time the Engineer's menu is accessed.**

9.3.2 Detector LED Blink

```
Flag[2] Detector LED Blink :ON
                                    Toggle Exit
```

Detector LED Blink enables or disables the analogue detector's LED poll flash. Pressing F2 displays the next flag.

9.3.3 Defect Buzzer Mode

```
Flag[3] Defect Buzzer Mode :Off
                                    Toggle Exit
```

Defect buzzer mode enables or disables the F100 LCD Buzzer if the panel is in defect. For NZ the options are just ON or OFF.

For Australia, there are options to mute the buzzer if a button has been pressed for 8, 24, or 72 Hours.
Pressing the Toggle button on an Australian panel cycles the defect buzzer mode between the following options:
Off,ON,8 HourvMute,24 Hour Mute, and 72 Hour Mute.
Pressing F2 displays the next flag.

9.3.4 Day/Night Mode

```
Flag[4] Day/Night Mode    :Off
                                    Toggle Exit
```

Day/Night mode enables the dual sensitivity settings for analogue detectors. To put the F100 into Night mode, it is necessary configure the F100 night mode map.
Pressing F2 displays the next flag.

```
Flag[5]Detect.Maintenance  :ON
                                    Toggle Exit
```

When Detector Maintenance is enabled and an analogue detector's clean air level has exceeded the maintenance level, the F100 will report the defect immediately. If set to Off, the defect is only reported for 2 minutes during the F100's daily 24-hour detector test.
Pressing F2 displays the next flag.

9.3.5 Six Minute Test

```
Flag[6] 6 Min Test (Debug) :Off
                                    Toggle Exit
```

<u>The 6 minute test option is a factory debug feature and should never be set in the field.</u>

9.3.6 Warning System Stage 1

```
Flag[7] Warn Sys Stage 1     :Off
                                    Toggle Exit
```

This flag is used to enable an alternate sound on Addressable Sounders connected to the F100's Analogue Loop, typically the ISO8201 T3 tone. This affects only loop modules configured as WARN type devices.

9.3.7 Sprinkler Evacuation Disable

```
Flag[7] SPR Evac Disable    :OFF
                    Toggle Exit
```

This option prevents the F100 from activating the Sprinkler LED signal sent to LED mimics & amplifiers via the RS485 bus. This signal is generated whenever a FSW, PSW, SPR or VMD device is in alarm state and triggers the global Warning System activation on all connected amplifiers. This option is intended for use in a scenario when multiple sprinkler zones exist and a global evacuation from this source is not desired.

9.4 Learn – Automatic Device Configuration

Soft-key **F3** selects the **Learn** function. The **Learn** function is used to update the configuration memory automatically by polling each device location on the selected loop or loops. If a device is present, the device type is noted.

```
            Learn Menu
Loop All          Overwrite  Add  Back
```

On selecting this function, the **F100A** places the LCD cursor over the loop numeric field. Select the loop (1 to 4, or All) using the **Decr** and **Incr** keys. Soft keys **F4** and **F5** select **Overwrite** or **Add**.

If **Overwrite** is selected, the **F100A** requests confirmation to perform the configuration change operation.

```
CONFIG WILL BE OVERWRITTEN ARE YOU SURE?
YES                                NO
```

Select **YES** or **NO** (**F1** or **F6**) as appropriate. If **YES** is selected the learn operation is performed, indicating on the LCD display which loop is currently being 'Learned'.

```
            Learn Function
        Loop 1    Learn addr 032
```

At this point, the **F100A** has cleared the configuration memory (in the non-volatile memory) and cycles through the detector addresses D00 to D99 (indicated by 032 on the LCD display example above), and then the module addresses M00 to M99. For each address, the **F100A** determines whether a device is present, and, if so, sets the default configuration to that device in the non-volatile memory.

If **Add** is selected, the **F100A** cycles through the detector addresses D00 to D99 (indicated on the LCD display), and then the module addresses M00 to M99. For each address, the **F100A** determines whether a device is present, and, if so, sets the default configuration to that device in the non-volatile memory.

Each new device added or overwritten to the configuration memory is given default values. Refer to Table 4.14:1: Loop Device Default Programming for those default values.

At the end of this 'Learn' process, the number of modules and detectors found on each loop is displayed on the LCD for 5 seconds.

9.5 Mimic – Set Number of LCD and LED Mimics and Network Mode

Soft-key **F4** selects the 'Number of Mimics' function. This is used to program the number of Mimic panels that are attached to the **F100A**. Use **PREVIOUS** or **NEXT** to alternate between the LCD, LED, Network Mode, and Supervision selections; then, use **Incr** and **Decr** to change the required selection. The display appears as shown below:

```
            Mimic Menu
LCD:01   LED:01 NET_Off SPV:Off    Exit
```

No. of LCD Mimics No. of LED Mimics Network Mode Network Supervisory Mode

Field Descriptions include these:

- **LCD:01:** sets the total number of supervised external LCD mimics connected to the **F100A** up to a maximum of 8. This does **not** include the **F100A** local display, nor any Mimics set to unsupervised (Address = 0).
- **LED:01:** sets the total number of supervised LED mimics connected to the **F100A** up to a maximum of 8.
- If the number of supervised mimics connected to the **F100A** does not match the number selected, a Fault is transmitted for each missing Mimic address.

  Net_Off: enables or disables Network Operation. Do not use this function on panel firmware other than 4.54 or greater.
- **SPV:Off:** enables or disables Network Supervisory or 'Headless' **F100A** Mode. In this mode the **F100A** does not need a local LCD display for normal operation; instead, the **F100A** System is controlled using a Pertronic Network Supervisory display. Note that the local LCD can still be used to control the **F100A** if required. See the Pertronic Network Documentation for more details.

Note: when the cabinet door is closed after the Engineer's menu has been accessed, an 'Extra Device' check is performed. Any mimics incorrectly configured will be reported in the 'Fault' queue with a message such as **Extra LCD Mimic 02**

9.6 Engineers More Sub-Menu

Press soft-key **More** **(F5)** to access the Second Level of the Engineers Menu, shown below:

```
          Engineer's menu
CRC  Default  Totals  Extra Keycode Back
```

9.6.1 CRC– Display and Update ROM and Configuration CRCs

Press soft-key **CRC** **(F1)** in the second Engineer's Menu to select the Update CRC function. The current ROM and configuration checksums are displayed, and an option is given to update the checksums or to exit and return to the Engineer's menu, as shown below:

```
ROM crc = 910c Config crc = e59c
                        Update  Back
```

The CRCs are expressed in hexadecimal notation. If Update is selected, Updating **CRCs** is displayed on the LCD during the updating process for about 30 seconds.

9.6.2 Default – Reset to Factory Default State

Press soft-key **Default** **(F2)** in the second Engineer's Menu display to select the function that resets the **F100A** to the factory default state. No devices are programmed for any loop, and all configuration data is cleared. The LCD display looks like this:

```
 RESET PANEL TO DEFAULTS ARE YOU SURE ?
YES                              NO
```

Select **YES** **(F1)** to reset all settings to factory default values. The panel performs a 'learn' action, adding all loop devices found to the configuration with default settings and then re-starts.
Press **NO** **(F6)** to return to the Engineer's Menu—no action also returns to the Engineer's Menu.

9.6.3 Totals – Display Device Totals.

Press soft-key **Totals** **(F3)** - the **F100A** obtains the detector and module totals for each loop and displays them on the LCD, as shown here:

```
Detectors on L1:087 L2:032 L3:064 L4:085
Modules   on L1:020 L2:015 L3:017 L4:024
```

Press any button to return to the Engineers Menu.

9.6.4 Extra – Check for Extra Devices

Press soft-key **Extra** **(F4)** to scan the analogue loops connected to the **F100A** and to report any un-configured devices. The **F100A** also performs an 'Extra Device' check after the Engineer's menu has been used and the cabinet door is closed.
During the checking process, the LCD shows the following screen:

```
          Please wait..
        Extra Device Check
```

If the device check was instigated from the menu and no extra devices are found, the display reverts to the Engineer's Menu. If the device check was due to closure of the door, the display reverts to normal operation.

- Extra devices found are entered in the Fault List.

9.6.5 Keycode – Change Engineer's Menu Password

Press soft-key **Keycode (F5)** to select the function to change the 5-digit password used to enter the Engineer's Menu. When **F5** is pressed, the LCD displays this screen:

```
        Set Engineer's Keycode
Enter Keycode : 10000        Enter  Esc
```

The new keycode may now be entered. Use **Decr** and **Incr** to select a number (0 to 9) at each digit location, and use **PREVIOUS** and **NEXT** to move to adjacent digits. When the new keycode has been entered, press Enter, and then Esc, or just Esc, to accept it and to return to the Engineer's Menu.

9.6.6 Back – Return to Previous Menu Level

Pushing this button bring you back to the previous menu selection.

10. System Features

10.1 Fire Signalling Relay (Master Alarm)

This relay is de-energized when the **F100A** is not in the Fire condition; and it is energized for the Fire condition.

An **F100A** Fire condition occurs when any loop device or output function is in Alarm, the device has not been isolated, and the device has 'Fire' set in its Device Option flags.

A set of changeover contacts is available via screw terminals. The contacts are rated 2A @ 30Vdc -resistive load.

10.2 Local Manual Call Point Input

An input is provided for the Local MCP connection, which is monitored with a 10kΩ End-Of-Line resistor. The input is in Fault if it is open-circuited and Fire if a Short Circuit Condition is seen at the terminals. The Local MCP details are described in Section 9.2.7.1.1: Local MCP Sy[01] (MCP).

10.3 Fault Signalling Relay

This relay is energized when there is no Fault, and is de-energized for a Fault condition.

An **F100A** Fault condition occurs if any of the following events arise:

- a system Fault exists (Loop, low battery, missing detector, for example);
- the system microprocessor fails;
- all power to the **F100A** is lost (Battery and Mains power).

Refer to Section 8.4: Event Log Messages for information on the types of Fault detected and displayed by the **F100A**.

The system microprocessor continually updates a Watchdog Timer 10 times per second. If the system microprocessor fails, the watchdog timer is no longer updated and times-out, causing a Fault condition.

When power to the **F100A** is lost, the Fault relay is released, causing a Fault condition.

A set of changeover contacts is available via screw terminals. The contacts are rated 2A @ 30Vdc -resistive load.

A second set of contacts is available via an IDC terminal for use by Brigade transmission devices. The contacts are rated 2A @ 30Vdc - resistive load.

Note: when the **F100A** door is closed, the panel transmits a maximum of two Faults per hour through the Brigade interface, to eliminate cases where an intermittent Fault may cause multiple Faults to be signalled to the monitoring system.

10.4 Warning System and Extension Bell Relays

Two monitored relay contacts, **Warning System** and **Extension Bell**, provide connection to building alarm sounders. These relays are normally open, closing to activate the sounders. A 10kΩ End-Of-Line (EOL) resistor is used for monitoring the integrity of the wiring. The contact is rated 5A @ 30Vdc - resistive.

Warning System and **Extension Bell** activate if any of the following events arise:

- A loop input device is in Alarm, it has the relevant Warning System or Extension Bell options set in its Option flag, and the device has not been isolated;
- A Logic or Timer Function is activated and is mapped to Warning System or Extension Bell and is not isolated;

- The Evacuation pushbutton is operated;
- The Brigade-Use Evacuation key-switch is operated;
- The EVACUATE button on a LCD Mimic is pressed.

Operation of **SILENCE ALARMS** de-activates the **Warning System** and **Extension Bell** relays.

Note: Loop relays configured as 'Bell' relays are also activated by the Evacuation key-switch or button and silenced by the **SILENCE ALARMS** button.

10.5 ACF and ACFM Relays

The on-board **ACFM** operates for ancillary control purposes, as for air conditioning, lifts and such.

ACFM provides a monitored, normally-open contact. The relay is normally de-energized with contacts rated 2A @ 30Vdc terminated with a 10kΩ End-Of-Line (EOL) resistor.

When the onboard ACFM relay activates, it provides an output of 24Vdc limited to 1.6A max

ACFM gets activated in the following conditions:

- A loop input device is in the Alarm condition, has the ACF flag set, and the device has not been isolated.
- A Logic or Timer Function is activated, is mapped to ACF, and is not isolated.

Operation of **ACF Isolate** de-activates the on-board **ACF** and **ACFM** relays and Loop Relays of type **ACF**.

10.6 General Purpose (GP) Relay

The General Purpose relay provides two sets of non-monitored contacts for general-purpose use.

GP is activated when either of the following occurs:

- A loop input device is in the Alarm condition, has the relevant GP Relay option set in its Option flag, and the device has not been isolated.
- A Logic or Timer Function is activated, is mapped to the GP Relay, and is not isolated.

10.7 Door Holder Relay

The on-board relay **DOOR HOLDER** provides clean change-over contacts rated 5A @ 30Vdc, for door holder solenoid purposes. These contacts are not monitored.

DOOR HOLDER is activated when either of these conditions occurs:

- A loop input device is in the Alarm condition, has the relevant Door Relay option set in its option flag, and the device has not been isolated.
- A Logic or Timer Function is activated, is mapped to the Door Relay, and is not isolated.

Operation of **Door Holder Isolate** de-activates the on-board Door Holder relay and any Loop Relays configured as 'DHR', Door Holder Relays.

10.8 Internal Sounder/Buzzer

The internal sounder activates when any Alarm condition is active and/or for any Fault condition, if the device 'Buzzer on Fault' option is enabled. Pressing any push-button on the front panel (usually Enter) silences the sounder, as well as carrying out the action associated with that push-button. The internal sounder is disabled when **SILENCE ALARMS** is operated.

Terminals (K5) are provided on the keyboard/display PCB for connection of an external sounder.

10.9 24 Hour Auto-Test

Once every 24 hours, the system automatically enters the two-stage 24-Hour Test sequence. During this test sequence, the message below displays:

24 HOUR TEST

It flashes alternately with the System Normal message of the **F100A** LCD display.

Each detector is tested in turn to simulate a Fire condition—'Fire' signalling is inhibited during this test. The entire detector test sequence takes less than 20 seconds. If a Fault is detected, the Fault signal is transmitted for 5 seconds and the Fault recorded in the Event log.

At the conclusion of the detector tests, a one-hour simulated Mains Failure sequence is initiated: the charger voltage is reduced to 22.4 V to allow the **F100A** to operate for one hour from the battery alone. The battery voltage must remain above 24.0 V; otherwise, a battery error will result. If this error occurs, the appropriate Fault message is displayed on the LCD, and the Power Supply LED lights.

If a Fire or Sprinkler-Operated alarm exists on the **F100A** before or during the 24-hour test, the test is cancelled.

10.10 PCB Master Reset (RESET)

The **RESET** push-button on the **F100A** PCB resets the microprocessor. This initialises and restarts the processor, clearing any latched Fire conditions and energizing the Fault relay—Normal state.

If **SILENCE ALARMS**, **Door Holder Isolate,** or **ACF Isolate** were active before the reset, they remain active after the Reset.

The sequence of events carried out by the **F100A** after reset (or power-up) includes the following:

- The loops are checked for short or open-circuits;
- Power is applied to the loops;
- The system waits for 8 seconds;
- The number of detectors and modules expected on each loop is displayed;
- Each loop is checked for extra devices above those expected;
- A 'Fire' condition is simulated at each detector to test the detectors;
- The **F100A** reverts to Normal operation (provided there are no Fault conditions present).

Any Faults detected during the start-up procedure are displayed, and a Fault signal is transmitted by releasing the **FAULT** relay.

10.11 Memory Lock

When the **MEMORY LOCK** switch on the **F100A** PCB is in the **ON** or **NORMAL** position, writing configuration data to the memory of the **F100A** is disabled. Writing configuration data to the memory is only enabled when the **MEMORY LOCK** switch is in the **OFF** position. The switch must be in the **OFF** position whenever changes are made to the configuration through the front panel push-buttons or by means of a connected PC or laptop.

If access to the memory is attempted (this can only be carried out from the Engineer's Menu) when the **MEMORY LOCK** switch is in the **ON** position, the LCD displays this message:

Switch Memory Lock Off

If **MEMORY LOCK** switch is OFF after exiting menus, a warning is given on the LCD display, as shown here:

Memory Lock Switch Fault

If the door is closed when **MEMORY LOCK** is OFF, a Door Interlock warning is given, and a Fault is transmitted.

10.12 Timer Power Supply

The switched-mode power supply provides a temperature compensated 27.4Vdc (at 20°C) for system power and battery float charge purposes. Two power supply versions are available, 3A continuous (4A peak) and 12A output capability. Both are short-circuit protected, and have shunt diode reverse polarity protection.

The Timer Power Supply has a test function that decreases the output voltage to 22.4Vdc on start-up, during the auto-test operation, and for a 1 hour period every 24 hours. This verifies correct system operation on the standby battery. If the panel is in either 'Fault' or 'Alarm' condition, the 24-Hour test is not performed. If the battery voltage falls below 24.2Vdc during the 1 hour test period, a 'Fault' signal is generated for 5 seconds (minimum), the **Power Supply Fault** LED turns ON, and a **Battery Low** error message is latched on the LCD, requiring a manual Reset or subsequent test pass. On failure of the 24hr test due to battery capacity, the charger voltage is reapplied immediately to prevent a deep discharge.

10.13 Battery Capacity

The **F100A** is designed to use two 12V, 6.5Ah up to two 12V, 24Ah sealed lead acid batteries in the 16U panel or higher capacity in the 28U and 40U rack panels.

The battery is protected by an in-line 10A fuse.

The maximum Bell load is 5A for each Bell relay. The supply is protected by fuses and a shunt diode. The charger rating is 4.0A or 12A. This leaves 1.2A (or 3.7A) available for battery recharge purposes, assuming a system standing load current of 300mA.

Selection of the system batteries is an important consideration to ensure the **F100A** functions correctly if the Mains supply is absent

To calculate the system load, use the Battery Calculator on the Pertronic website:

http://www.pertronic.com.au/battery_calc/welcome.php

To determine the system load, install the panel and peripheral equipment, and apply Battery and Mains power. Ensure that the system is in its Normal (no Faults or Alarms) state, and that the batteries are fully charged. Disconnect the battery (+) lead at the battery and insert an ammeter set to the 0-1A range—the ammeter should have an averaging function. Only a small current should be detected at this stage because it is the float charge current for the battery. Disconnect the Mains supply. The **F100A** is now running from the battery, and the current now showing on the ammeter is the quiescent (normal) load current of the system. Typically, this will be about 200mA (average) for a 100-detector system and should never exceed 300mA (average).

10.14 Power Supply Fault Indication

When a Power Supply problem occurs, a Fault is transmitted and the Power Supply Fault LED turns ON. The Fault is transmitted for at least 5 seconds, and remains active until the Fault is rectified. The Power Supply Fault LED remains ON until the **F100A** is reset. The cause of the Fault is shown on the LCD display.

The possible causes for power supply Faults are shown in the table:

	LCD Message	Comments
Battery Missing	**Battery Fail / Missing**	Checked every 10 seconds. (Below 22.5V)
Low Battery Voltage	**Battery Low**	Below 24.0V
High Battery Voltage	**Charger Volts High**	Above 28.5V
Low Charger Voltage	**Charger Volts Low**	Below 25.9V when Mains supply is good. Note: This Fault indication is suppressed for 55 Minutes after an Alarm, Sounder Activation, Mains failure or 24-Hour test.
Reduced Capacity Battery	**Battery Low**	Low Battery Volts during 24-Hr test, or when running without Mains for a prolonged period. Latched by the panel.
Very Low Battery Voltage	**Battery Fail / Missing**	Battery Voltage below 20V.
Mains Lost	**Mains Failure**	Occurs instantantly when the door is closed with the Mains disconnected. Occurs one hour after the Mains is lost if the door is already closed.

Table 10.14:1: Power Supply Faults

10.15 Loss of Mains

If the panel door is closed with no Mains supply present at the panel, a Door Interlock Fault is generated, and the message below displays in the LCD:

MAINS FAILURE

A Fault is transmitted, and the sounder activated.

In the event of a Mains failure that lasts more than one hour, a similar procedure takes place after the lapse of one hour: the message above is displayed on the LCD, and a Fault is transmitted until the Mains supply is restored.

10.16 Door Interlock

A micro switch determines whether the door is open or closed. A Fault signal is transmitted and the sounder activated when the door is closed if certain states are active, or switches are Off-Normal. These include the following:

- Auto-Test
- Mains Lost
- Warning System Isolate

- Extension Bell Isolate
- ACF Isolate
- Door Holder Isolate
- Door Interlock input
- Memory Lock
- Network Card Isolate
- Walk Test

Door Interlock Fault

The message above is displayed in the Fault Queue. The events related to the Interlock Fault are placed in the System Fault or System Event queues, and the buzzer pulses rapidly as a warning.

10.17 Door Open Warning

The internal piezo buzzer sounds for three seconds every two hours if the door is open. The first warning occurs two hours from the time the door is opened, or from the time the system is reset with the door open. The LCD displays the following message:

Door Fault

The message remains visible until the door is closed.

10.18 Door Closure – Test for Additional Devices

Whenever the panel door is closed after exiting the Engineer's Menu or configuration via the Utility program, the **F100A** automatically tests each device on the loop and checks the loop for detectors or modules that are present, but which have not been specified in the configuration memory. This test also checks that the expected number of LCD and LED Mimic panels is connected. This test follows the format as described in Section 9.6.4: Extra – Check for Extra Devices where the test is carried out through the Engineer's Menu.

If extra devices are detected, the **F100A** transmits a Fault, and a Fault message is displayed on the LCD display.

10.19 2-Loop Extension Board

Two additional loops (LOOP3 and LOOP4) may be added to the basic **F100A**. A two-loop extension board is fitted below the left corner of the **F100A** Master PCB and connects to the Master PCB using the connector **EXTERNAL LOOP DRIVER (K9)**.

In very early **F100** panels, the 2-Loop Extension board was fitted above the Master board in the position generally reserved for the Brigade Interface board.

10.20 Internal Loop 1, 2 Connection

For convenience, panel-mounted loop devices may be connected to the loops via IDC connectors mounted adjacent to the screw terminal loop connectors on the Master PCB. These connectors are labelled **K4**, **INTERNAL LOOP1** and **K5**, **INTERNAL LOOP2**.

Note: Do not connect Pertronic loop responders using K4 or K5; Instead, use the full loop terminals.

10.21 Earth Connection and Monitoring

It is important that a good Ground or Earth connection is made to the **F100A** for transient protection. A screw terminal is provided on the **F100A** PCB (between the LOOP1 and LOOP2 screw terminal connectors) for this purpose. This Earth terminal should be connected to the panel Earth, which in turn is connected to the Mains Earth.

If any component of the **F100A**—such as one of the loops, one of the inputs or outputs with reference to the power supply—has a hard or partial short to Earth (less than 5kΩ), then Earth leakage detection circuitry on the **F100A** detects the condition, transmits a Fault, and provides a warning on the LCD display, as shown below:

Earth Fault

10.22 Detector and Module LED Disable

The flashing **Poll** LED on detectors may be disabled through the **DLed** option in the System Flags Menu of the Engineer's Menu. The Poll LED on modules cannot be turned OFF.

11. PC Configuration

Note: F100AVR panel firmware version 5.0 requires Panel Utility version 5.0 or later. Attempting to connect using an earlier version will result in an 'Incorrect Config Utility Version' error.

The ***F100A*** contains an isolated RS232 port for local or remote PC Configuration and monitoring.

The Pertronic Industries ***F100A*** Configuration utility can fully configure an ***F100A*** system from a Windows XP, Vista or Windows 7 interface. The ***F100A*** Configuration utility also contains status report and remote control software. Users may dial-in (via modem) to the ***F100A*** and monitor or control the complete state of the system, including display of detector analogue values and event history of the Fire Alarm system.

Figure 14: F100A Configuration Utility Main window

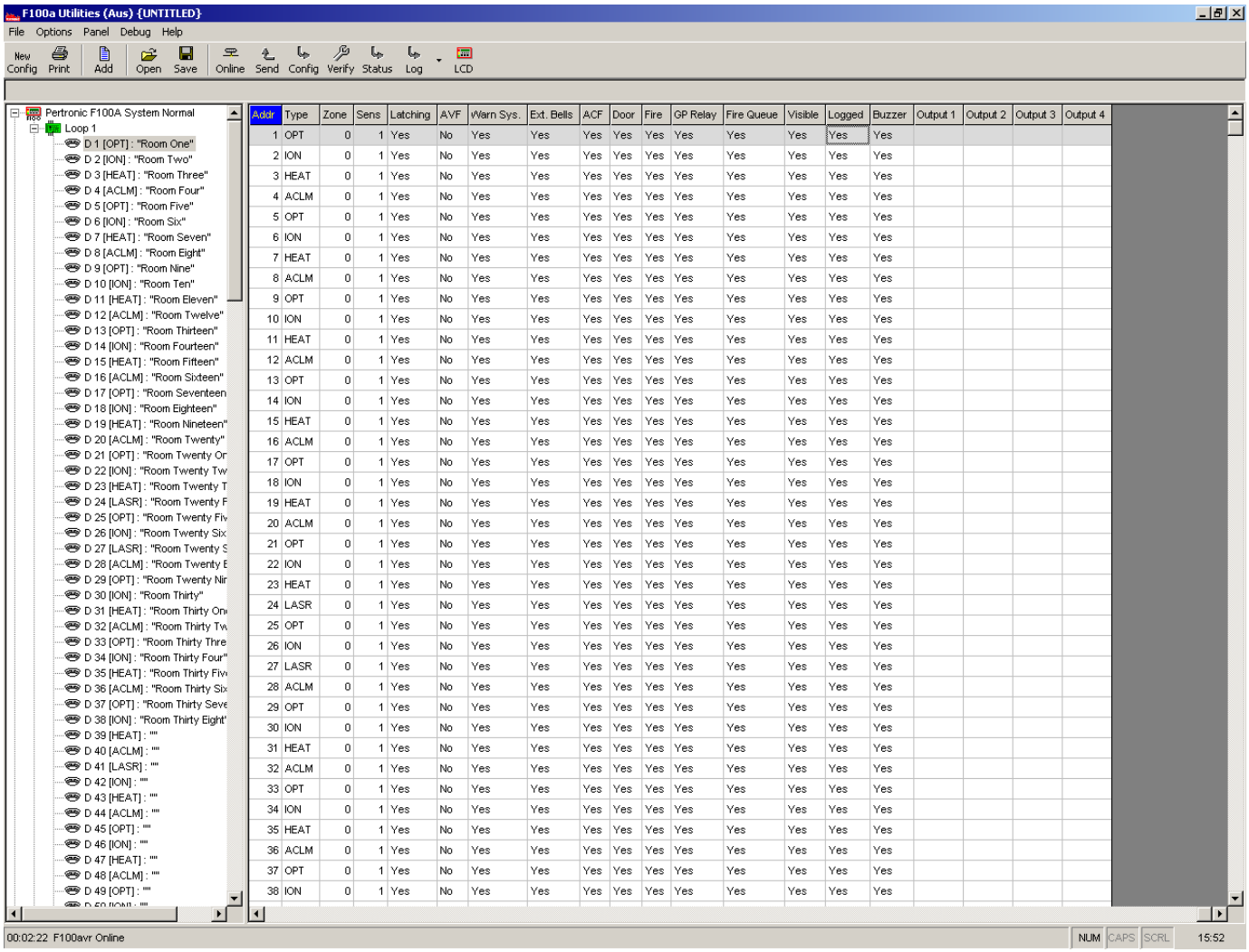

Addr	Type	Zone	Sens	Latching	AVF	Warn Sys.	Ext. Bells	ACF	Door	Fire	GP Relay	Fire Queue	Visible	Logged	Buzzer	Output 1	Output 2	Output 3	Output 4
1	OPT	0	1	Yes	No	Yes	Yes	Yes	Yes	Yes	Yes	Yes	Yes	Yes	Yes				
2	ION	0	1	Yes	No	Yes	Yes	Yes	Yes	Yes	Yes	Yes	Yes	Yes	Yes				
3	HEAT	0	1	Yes	No	Yes	Yes	Yes	Yes	Yes	Yes	Yes	Yes	Yes	Yes				
4	ACLM	0	1	Yes	No	Yes	Yes	Yes	Yes	Yes	Yes	Yes	Yes	Yes	Yes				
5	OPT	0	1	Yes	No	Yes	Yes	Yes	Yes	Yes	Yes	Yes	Yes	Yes	Yes				
6	ION	0	1	Yes	No	Yes	Yes	Yes	Yes	Yes	Yes	Yes	Yes	Yes	Yes				
7	HEAT	0	1	Yes	No	Yes	Yes	Yes	Yes	Yes	Yes	Yes	Yes	Yes	Yes				
8	ACLM	0	1	Yes	No	Yes	Yes	Yes	Yes	Yes	Yes	Yes	Yes	Yes	Yes				
9	OPT	0	1	Yes	No	Yes	Yes	Yes	Yes	Yes	Yes	Yes	Yes	Yes	Yes				
10	ION	0	1	Yes	No	Yes	Yes	Yes	Yes	Yes	Yes	Yes	Yes	Yes	Yes				
11	HEAT	0	1	Yes	No	Yes	Yes	Yes	Yes	Yes	Yes	Yes	Yes	Yes	Yes				
12	ACLM	0	1	Yes	No	Yes	Yes	Yes	Yes	Yes	Yes	Yes	Yes	Yes	Yes				
13	OPT	0	1	Yes	No	Yes	Yes	Yes	Yes	Yes	Yes	Yes	Yes	Yes	Yes				
14	ION	0	1	Yes	No	Yes	Yes	Yes	Yes	Yes	Yes	Yes	Yes	Yes	Yes				
15	HEAT	0	1	Yes	No	Yes	Yes	Yes	Yes	Yes	Yes	Yes	Yes	Yes	Yes				
16	ACLM	0	1	Yes	No	Yes	Yes	Yes	Yes	Yes	Yes	Yes	Yes	Yes	Yes				
17	OPT	0	1	Yes	No	Yes	Yes	Yes	Yes	Yes	Yes	Yes	Yes	Yes	Yes				
18	ION	0	1	Yes	No	Yes	Yes	Yes	Yes	Yes	Yes	Yes	Yes	Yes	Yes				
19	HEAT	0	1	Yes	No	Yes	Yes	Yes	Yes	Yes	Yes	Yes	Yes	Yes	Yes				
20	ACLM	0	1	Yes	No	Yes	Yes	Yes	Yes	Yes	Yes	Yes	Yes	Yes	Yes				
21	OPT	0	1	Yes	No	Yes	Yes	Yes	Yes	Yes	Yes	Yes	Yes	Yes	Yes				
22	ION	0	1	Yes	No	Yes	Yes	Yes	Yes	Yes	Yes	Yes	Yes	Yes	Yes				
23	HEAT	0	1	Yes	No	Yes	Yes	Yes	Yes	Yes	Yes	Yes	Yes	Yes	Yes				
24	LASR	0	1	Yes	No	Yes	Yes	Yes	Yes	Yes	Yes	Yes	Yes	Yes	Yes				
25	OPT	0	1	Yes	No	Yes	Yes	Yes	Yes	Yes	Yes	Yes	Yes	Yes	Yes				
26	ION	0	1	Yes	No	Yes	Yes	Yes	Yes	Yes	Yes	Yes	Yes	Yes	Yes				
27	LASR	0	1	Yes	No	Yes	Yes	Yes	Yes	Yes	Yes	Yes	Yes	Yes	Yes				
28	ACLM	0	1	Yes	No	Yes	Yes	Yes	Yes	Yes	Yes	Yes	Yes	Yes	Yes				
29	OPT	0	1	Yes	No	Yes	Yes	Yes	Yes	Yes	Yes	Yes	Yes	Yes	Yes				
30	ION	0	1	Yes	No	Yes	Yes	Yes	Yes	Yes	Yes	Yes	Yes	Yes	Yes				
31	HEAT	0	1	Yes	No	Yes	Yes	Yes	Yes	Yes	Yes	Yes	Yes	Yes	Yes				
32	ACLM	0	1	Yes	No	Yes	Yes	Yes	Yes	Yes	Yes	Yes	Yes	Yes	Yes				
33	OPT	0	1	Yes	No	Yes	Yes	Yes	Yes	Yes	Yes	Yes	Yes	Yes	Yes				
34	ION	0	1	Yes	No	Yes	Yes	Yes	Yes	Yes	Yes	Yes	Yes	Yes	Yes				
35	HEAT	0	1	Yes	No	Yes	Yes	Yes	Yes	Yes	Yes	Yes	Yes	Yes	Yes				
36	ACLM	0	1	Yes	No	Yes	Yes	Yes	Yes	Yes	Yes	Yes	Yes	Yes	Yes				
37	OPT	0	1	Yes	No	Yes	Yes	Yes	Yes	Yes	Yes	Yes	Yes	Yes	Yes				
38	ION	0	1	Yes	No	Yes	Yes	Yes	Yes	Yes	Yes	Yes	Yes	Yes	Yes				

Figure 15: F100A Configuration Utility Status window

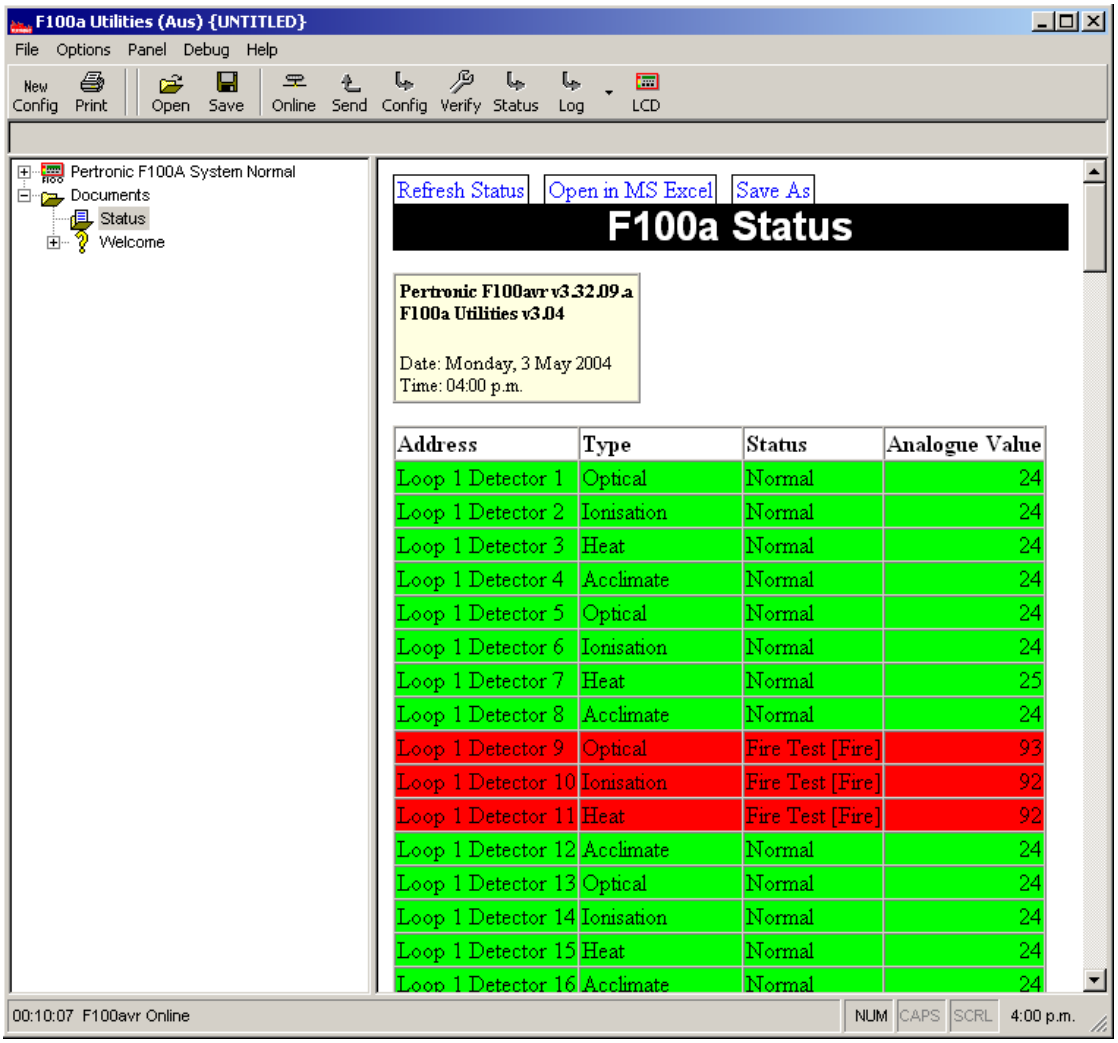

Address	Type	Status	Analogue Value
Loop 1 Detector 1	Optical	Normal	24
Loop 1 Detector 2	Ionisation	Normal	24
Loop 1 Detector 3	Heat	Normal	24
Loop 1 Detector 4	Acclimate	Normal	24
Loop 1 Detector 5	Optical	Normal	24
Loop 1 Detector 6	Ionisation	Normal	24
Loop 1 Detector 7	Heat	Normal	25
Loop 1 Detector 8	Acclimate	Normal	24
Loop 1 Detector 9	Optical	Fire Test [Fire]	93
Loop 1 Detector 10	Ionisation	Fire Test [Fire]	92
Loop 1 Detector 11	Heat	Fire Test [Fire]	92
Loop 1 Detector 12	Acclimate	Normal	24
Loop 1 Detector 13	Optical	Normal	24
Loop 1 Detector 14	Ionisation	Normal	24
Loop 1 Detector 15	Heat	Normal	24
Loop 1 Detector 16	Acclimate	Normal	24

Figure 16: F100A Configuration Utility LCD Simulator

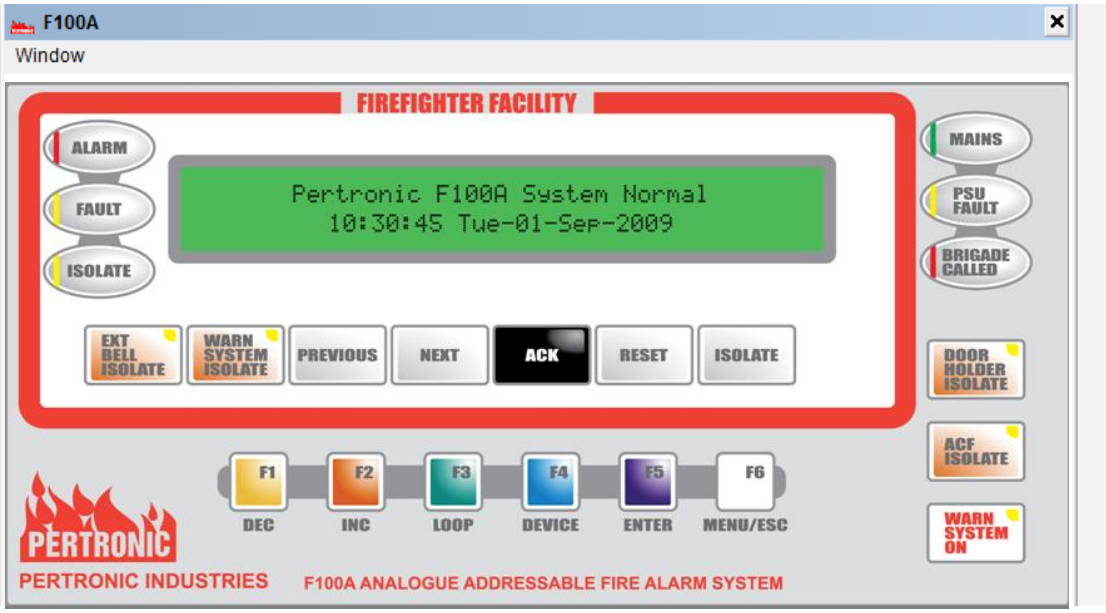

12. Detector and Module Compatibility

The following is a list of addressable devices that may be connected to the **F100A**:

12.1 Actuating Devices

System Sensor 1251AUS or 1251BPI low profile analogue-addressable Ionisation smoke detector

System Sensor 2251AUS or 2251BPI low profile analogue-addressable Photo-electric smoke detector

System Sensor 2251TMBAUS or 2251TMBPI low profile analogue-addressable Acclimate smoke detector

System Sensor 3251 low profile analogue-addressable Omni smoke and Heat detector (No longer available)

System Sensor 5251RP or 5251RBPI low profile analogue-addressable Heat detector with Rate of Rise

System Sensor 5251AUS or 5251BPI low profile analogue-addressable Heat detector fixed temperature

System Sensor 7251AUS low profile analogue-addressable Laser detector

System Sensor FTX-P1 low profile analogue-addressable Filtrex detector

System Sensor M500KAC analogue-addressable Manual Call Point

System Sensor M500MB analogue-addressable Monitor Module

System Sensor M501MB analogue-addressable Monitor Module (miniature)

System Sensor M502M analogue-addressable Conventional Detector Interface

System Sensor M503ME analogue-addressable Monitor Module (Micro, with LED)

System Sensor M2201E dual input module

System Sensor M221E dual input single output module

12.2 System Modules

System Sensor M500CH Control module

System Sensor M500X Zone Isolator module

System Sensor B224RTE Relay/ Detector base

System Sensor B524IEFT-1 Isolator/ Detector base

System Sensor M512ME Conventional Detector Interface module

Pertronic Model F100LRU analogue-addressable 4-Way Relay Responder (monitored/non monitored)

Pertronic Model F100LR analogue-addressable 8-way Loop Responder

Pertronic Model F100PFCU, F100PFCR analogue-addressable Fan Control system

13. ORDERING INFORMATION AND SPARE PARTS

13.1 Ordering Information

Table 13.1:1: F100A Ordering Information

Item	Part Number	Notes
F100A, basic two-loop system.	F100A19 (800mm Cabinet)	Includes: two analogue-addressable loops, main PCB, 2x40 character alphanumeric display, keypad, PSU and all internal wiring. Mounted in a 800 x 550 x 185 (mm) cabinet
F100A, optional two-loop system.	F100A19EA (800mm Cabinet)	As above, except includes 50W amplifier
F100A 2-loop extender PCB	F100P2LB	Mounted on the main ***F100A*** PCB
F100A repeater panel	F100AM	Contains a 40 x 2 LCD display c/w AS4428 function
F100A 8-way Zone Indication Display PCB	AFI – 8WAY	May be used to display the status of a zone. Displays 8 Alarms, s and Isolates depending on the zone condition
F100A 8-way LED display PCB	A8WAY	May be used on the main PCB or repeater panel. Displays 8 alarm LED's only
System sensor low profile analogue-addressable Ionisation smoke detector	1251BPI	
System sensor low profile analogue-addressable Photoelectric smoke detector	2251BPI	
System sensor low profile analogue-addressable multi-sensor Photo-Thermal Acclimate fire detector	2251TMBPI	
System Sensor analogue-addressable Multi-sensor Photo-Thermal-Infrared (PTIR) fire detector	2251TLE	Configure as Acclimate in the panel configuration.
System Sensor analogue-addressable Multi-sensor CO-Photo-Thermal-Infrared (COPTIR) fire detector	2251CTLE	Configure as Acclimate in the panel configuration.
System sensor analogue-addressable ROR Heat detector	5251RBPI	
System sensor analogue-addressable fixed temperature Heat detector	5251BPI	

Item	Part Number	Notes
System sensor analogue-addressable Laser detector	7251	
System Sensor analogue-addressable Monitor Module	M500MB	
System Sensor analogue-addressable Monitor Module (miniature)	M501M	
System Sensor analogue-addressable Monitor Module (micro, with LED output)	M503ME	
System Sensor analogue-addressable Conventional Interface Module	M512ME	Superseded by M210E-CZR
System Sensor analogue-addressable Conventional Interface Module	M210E-CZR	
System Sensor Control module	M500CH	Superceded by M500S and M500R
System Sensor Control module	M500S	Supervised output cabling
System Sensor Relay module	M500R	Un-supervised output cabling
System Sensor Zone Isolator module	M500X	
System Sensor Dual Input module	M220E	
System Sensor Dual Input single output module	M221E	
System Sensor Dual Input dual output module	M500DMR	
System Sensor Relay/ Detector base	B224RTE	
System Sensor Isolator/ Detector base	B524IEFT-1	
System Sensor B501 Detector base	B501	
Pertronic analogue-addressable 4-way Relay Responder (monitored and non-monitored contacts)	F100LRU F100LRUC	Board only Board mounted in metal case
Pertronic analogue-addressable 8-Input Loop Responder with one relay output	F100LR F100LRC	Board only Board mounted in metal case
9-pin Null Modem Cable	NML-2M or NML-5M	Used for PC to F100AVR link – 2 or 5 metre options

13.2 Spare Parts

Table 13.2:1: F100A Spare Parts Schedule

Item	Part Number
F100A – Main PCB assembly	F100ZMBAUS (Atmega 128)
F100A – Main PCB assembly	F100M-256AUS (Atmega 256)
F100A – Keyboard/ display assembly	F100LCDAUS
F100A – 4.0A PSU assembly	24/4SWMP
F100A – 12.0A PSU assembly	24/12ASWMPS
F100A – 2-loop extender PCB	F100P2LB

14. INSTALLATION INSTRUCTIONS

The ***F100A*** must be installed by suitably qualified personnel.

The following installation instructions are a guide to the successful installation and commissioning of an ***F100A*** Fire Alarm system.

14.1 Pre-Installation Check

Before opening the ***F100A*** system packaging, inspect the packaging for external damage.

Remove the ***F100A*** from its packaging, and inspect the cabinet for external damage.

Check that the cabinet key is attached to the top of the cabinet.

Open the cabinet, and visually check that all circuit boards and cabling is secured into place.

Check that all fuses on the main PCB, the power supply, and other auxiliary PCBs (where applicable) are in place.

14.2 Panel Installation and Power Connection

Install the cabinet to its assigned position.

Ensure that ***F100A*** is clean internally and that no residual contamination such as metal filings is present.

Ensure that all monitored outputs requiring an EOL resistor are correctly terminated at the panel. It is assumed that the external loop and other external site wiring have been installed, but are not connected to the ***F100A***, at this point.

Ensure that all tabs are broken on the M500CH modules that are configured for a non-monitored relay. Failure to do this could create an earth fault or—in the worst case—damage the loop devices and loop drivers (This would cause an AC voltage being switched into the monitor circuit.)

Ensure that a detailed plan and address assignment table is available for each of the loops.

Before connecting the external loops and other external wiring, install the Mains power (240Vac ±10%). Do not connect the batteries.

Check that the system is correctly earthed.

Apply the Mains power to the system, and observe that the ***F100A*** performs its initialisation sequence—this takes about 30 seconds. Faults will be detected (such as loop faults and battery missing), but ignore these at this stage.

Connect the batteries, and reset the system with the **RESET** push-button on the ***F100A*** main PCB.

Connect Loop 1 cabling, and either run the Learn option, or enter the detector and module configuration data through the Engineer's Menu, such that each device on loop 1 has been configured. When using a PC, upload the panel configuration file to the panel.

Reset the ***F100A***, using RESET on the main PCB.

Deal with any Faults: For loop or device faults, investigate the source of the Fault (for example, wrong configuration data, double addressing), and correct the fault. For other (system) faults, locate and deal with these too before proceeding.

When Loop 1 has been configured correctly and no other faults are present, connect Loop 2 to the ***F100A***, and repeat the configuration and test process.

Repeat this for Loops 3 and 4 as applicable.

14.3 Other External Devices

When the loops have been successfully configured and tested, connect and test the sounders connected to the Warning Sys and Ext Bell relays.

Connect and test the devices controlled by ACF.

Test the operation of the loop relays.

Connect and test any other devices that are a requirement of the system.

Test the system as a complete functional unit, testing all input and output devices.

15. MONTHLY TESTING

All testing and maintenance must be performed by suitably trained and qualified personnel.

After opening the fire alarm control unit cabinet, operate the appropriate switches to isolate the transmitter and disable the bell circuits.

Check that the voltage across the two 12V sealed lead acid batteries is in the range 27.2 to 27.5V. Note that the float voltage is temperature compensated.

Run auto-test to check the addressable detectors.

Test all alerting devices and indicators for correct operation. Refer to the particular detector information to determine how to test activate a detector.

After test completion, all results should be entered into the system logbook.

Ensure that the system is fully reset to normal, and restore the Buzzer Silence and Isolate switches to normal before closing and locking the cabinet door.

16. DRAWINGS

Figure 17: F100A Board Layout

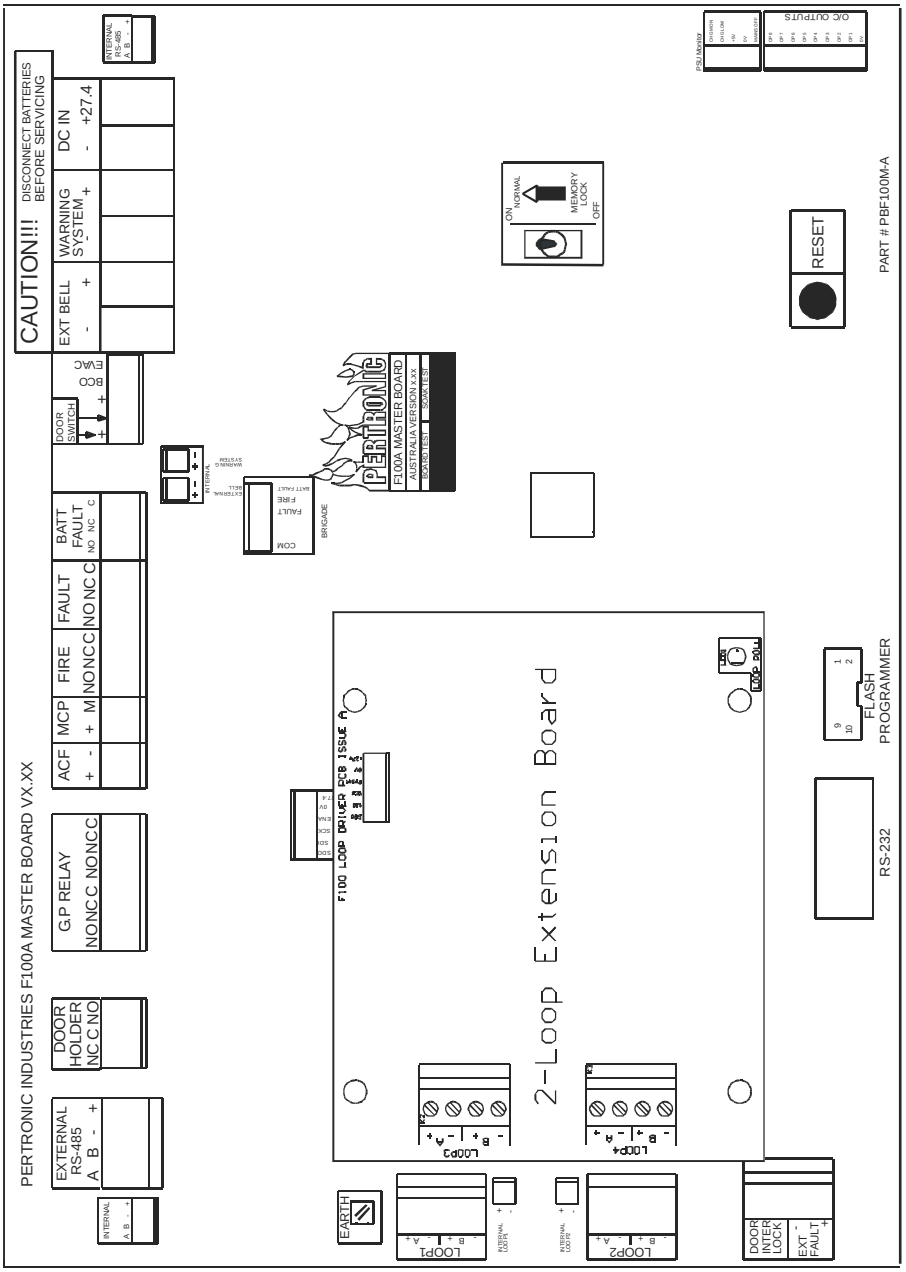

F100A Board Layout Aust Issue 1_18MAR2005

Figure 18: Detector Wiring

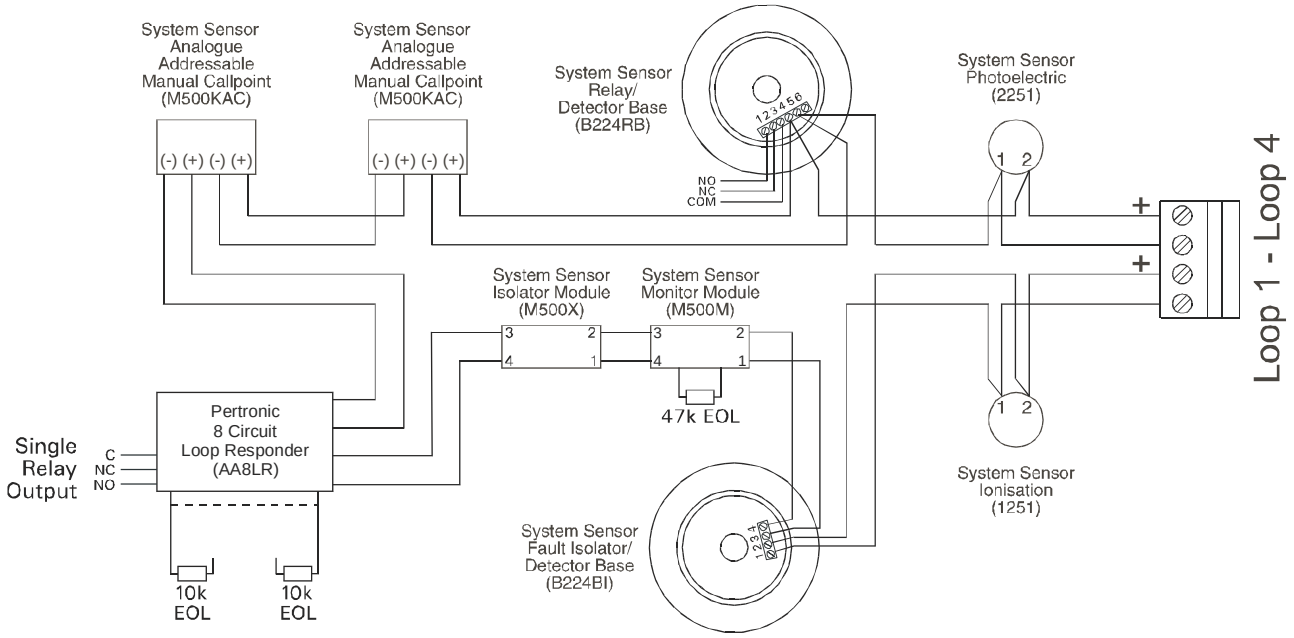

F100 Detector Wiring Issue 1_18MAR2005

Figure 19: Loop Relay Wiring

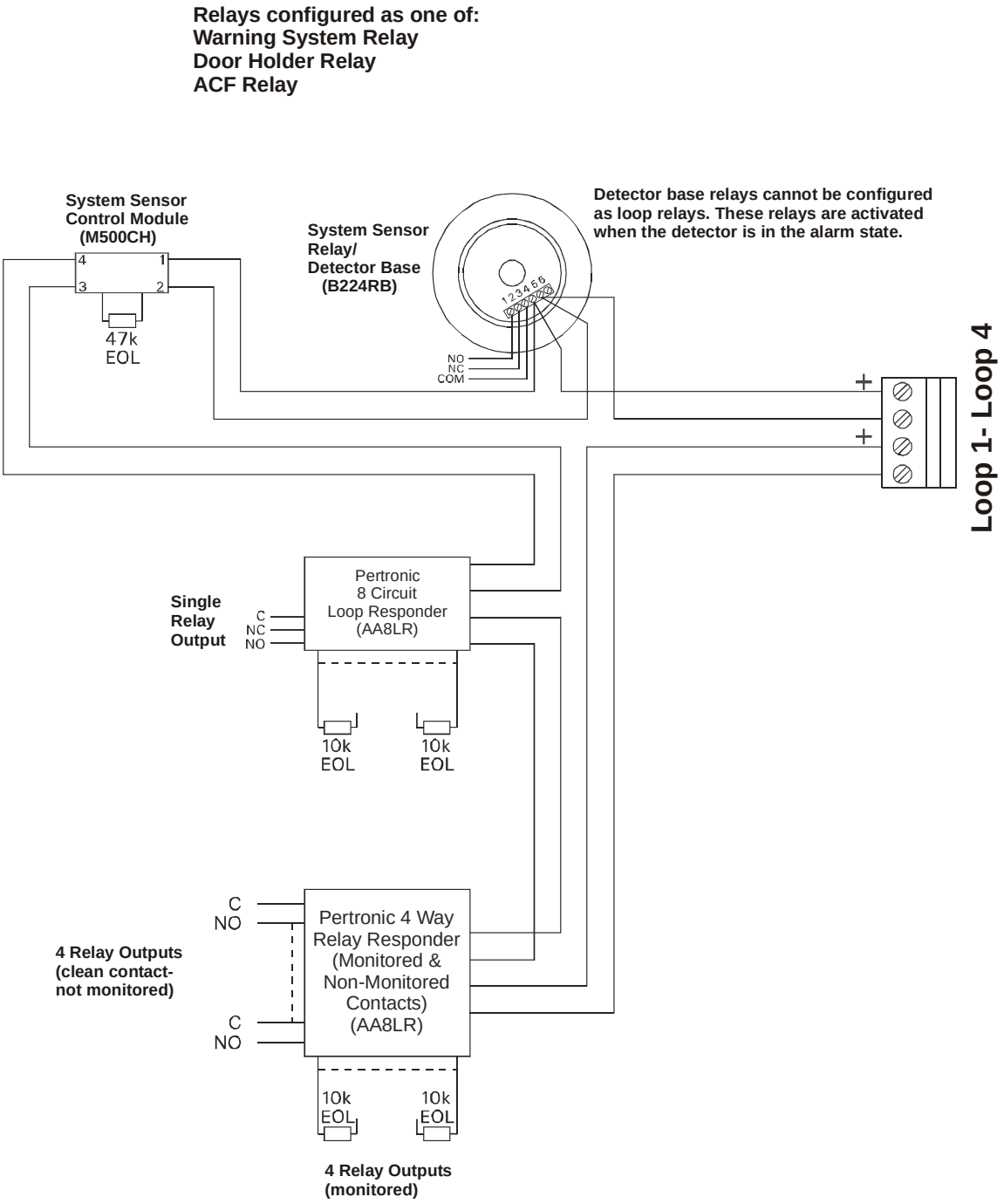

F100A Loop Relay Wiring Aus Issue 1_11MAR2005

Figure 20: Bell & ACF Monitored Output Wiring

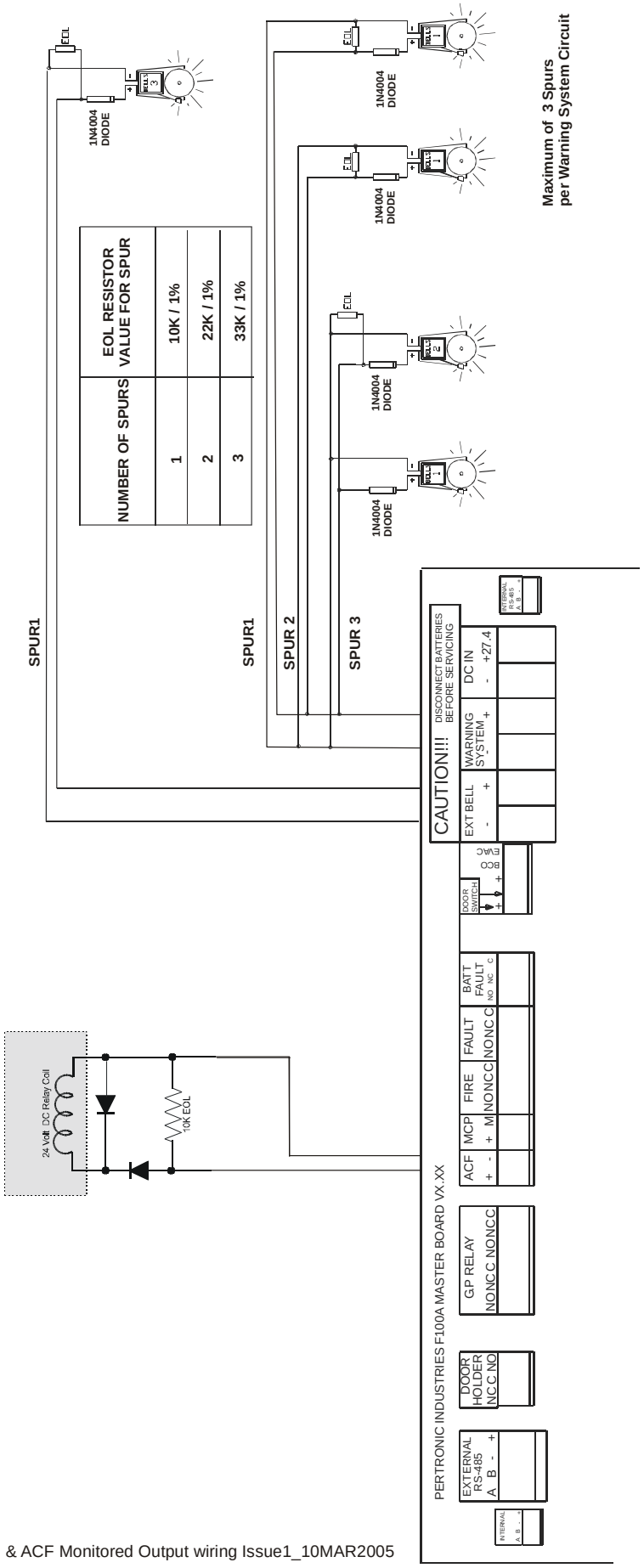

Bell & ACF Monitored Output wiring Issue1_10MAR2005

Figure 21: System Wiring—using 4A Power Supply

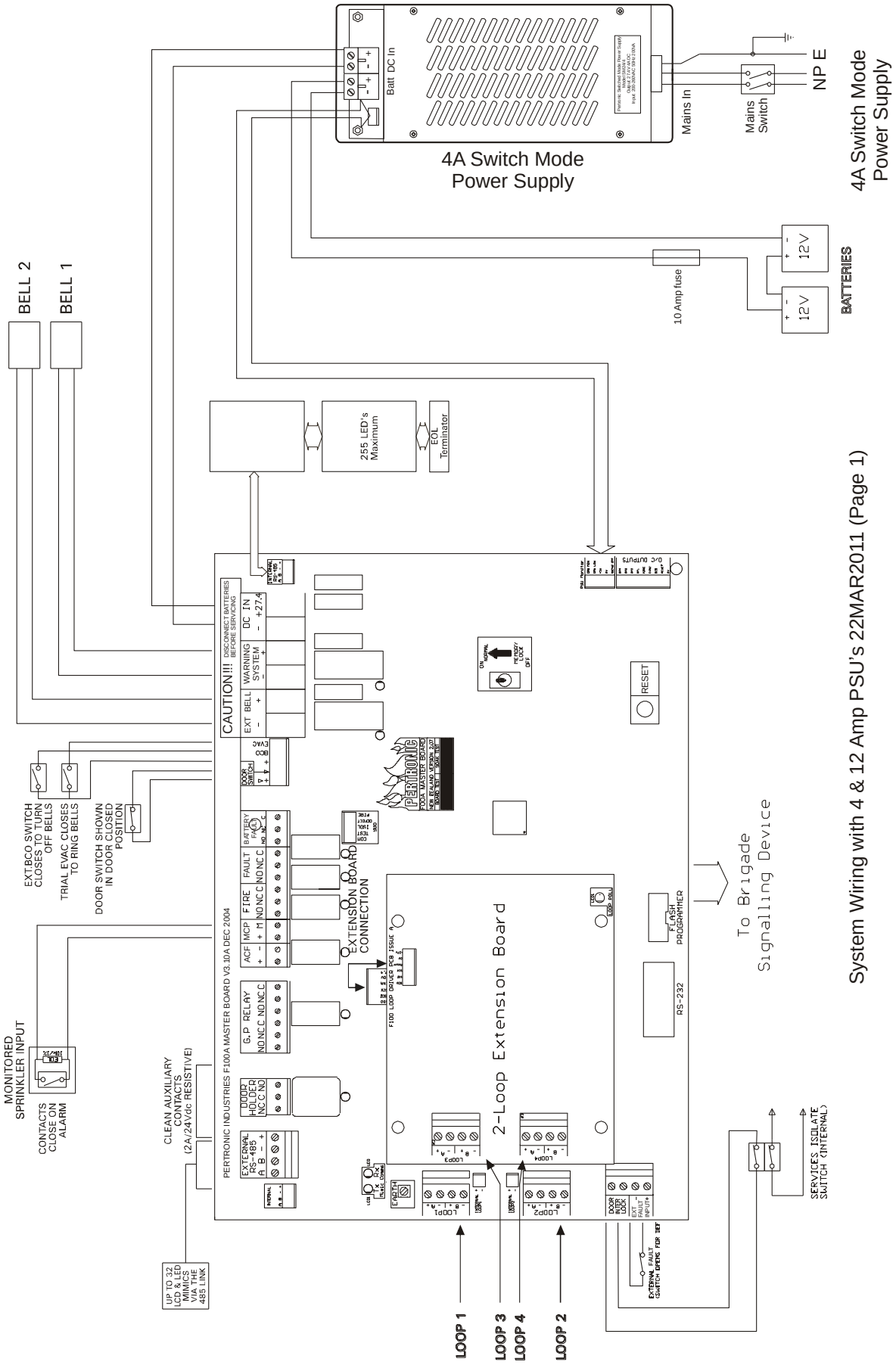

Figure 22: System Wiring—using 12A Power Supply

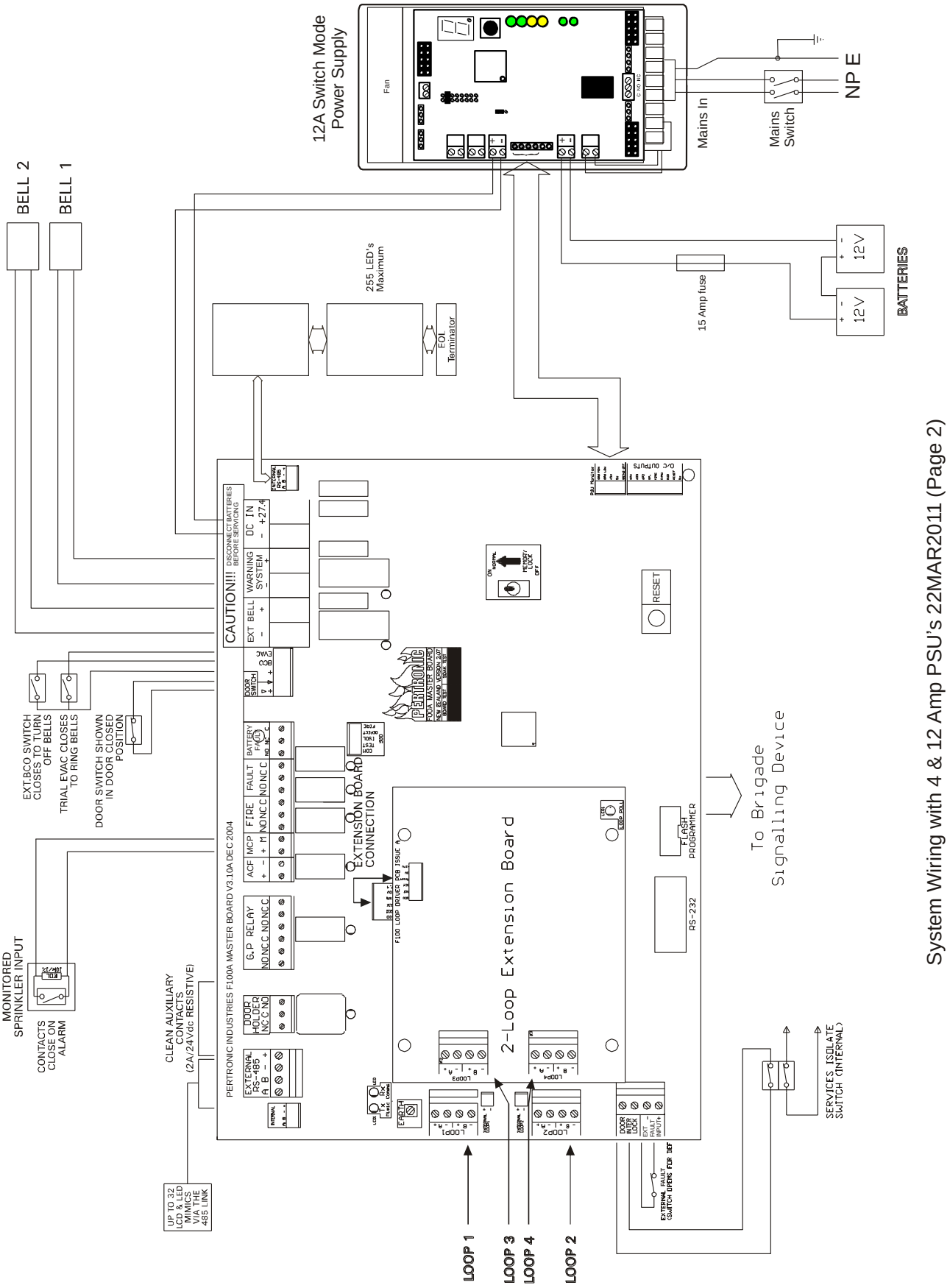

System Wiring with 4 & 12 Amp PSU's 22MAR2011 (Page 2)

Figure 23: F100A Case Dimensions

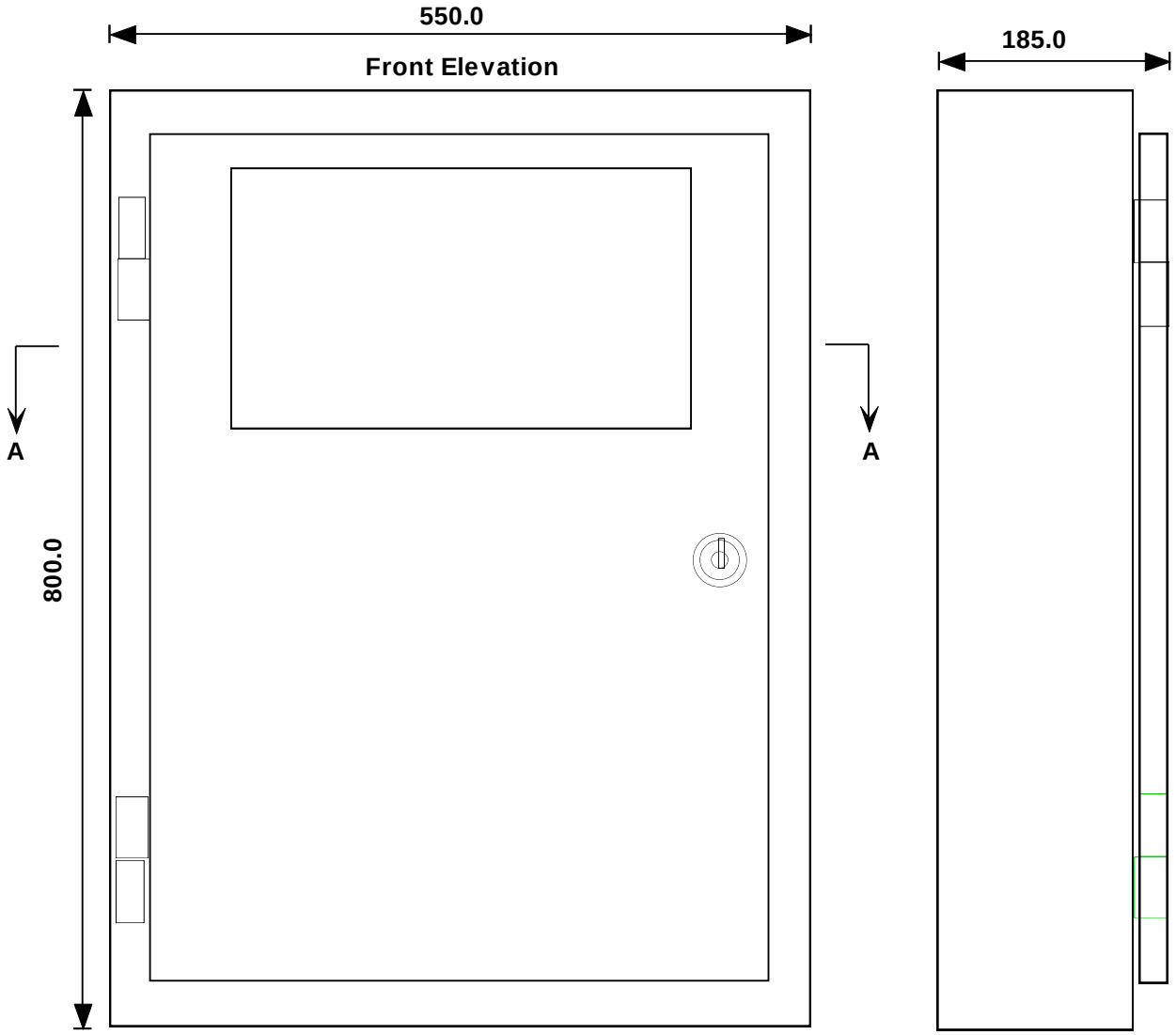

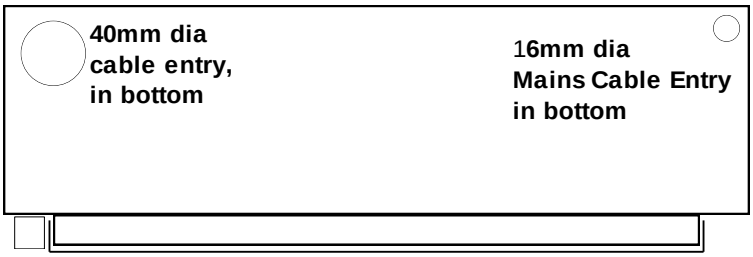

Section AA

F100A Case Dimensions Aust Issue1.1_1Sep2008

17. Appendix A – General Wiring Guide

17.1 Loop Wiring Specification

1. The analogue addressable loops for the F100A and F120A fire indicator panels support 198 devices, made up of 99 detectors and 99 modules. The 99 detectors can be a mix of any type supplied by Pertronic, and the 99 modules can be a mix of input and output modules.
2. The field wiring of the analogue addressable loop is electrically isolated from the rest of the system and is not referenced to the normal voltages found within the FIP installation.
3. A short circuit on one loop will not cause the panel to lose communication or affect the performance of other addressable loops within the system.
4. A short circuit to Earth on a single leg of any loop will not affect the communication of the devices on that loop; however, it will initiate an 'Earth Fault' on the FIP.
5. The F100A and F120A Master boards have an Earth terminal that must be connected to the main Earth system of the installation. This monitors all wiring that is directly connected to the FIP for Earth faults.
6. The F100A panel has capacity for 4 analogue addressable loops. The F120A panel has capacity for 20 analogue addressable loops and has additional features to the F100A FIP. Panels come standard with two analogue addressable loops fitted and are expandable by two analogue addressable loops at a time.
7. The analogue addressable loops are generally wired in a closed loop format, often referred to as Style 6. The loop can also be wired in open format that is often referred to as Style 4.

   There are no technical restrictions to the number of 'T-offs' on each analogue addressable loop; however, AS1670.1 places limitations on addressable circuit wiring which affect the open loop and 'T-off' (style 4) configurations.
8. The loop wiring distances vary according to the load on the loop and the size of the conductor's chosen. A general rule to follow is shown in the table:

0.75mm^2 twisted pair	0.7 Km
1.5mm^2 twisted pair	1.5 Km
2.5mm^2 twisted pair	2.5 Km
4.0mm^2 twisted pair	3.5 Km

9. Factors that limit the distance of the analogue addressable loops are resistance, capacitance, and voltage drop. Another factor that can affect the analogue addressable loop performance is induction. Loop wiring should be kept separated from highly inductive circuits, such as cables carrying current to speed controlled AC motors. Twisted cable is required for loop circuitry. Parallel conductor (flat twin) cables are affected by inductive interference and should not be used. When installing loop cables in areas suspected of high inductance, consult Pertronic Industries for advice.
10. The general rule for limiting the loop distance is defined by resistance. The maximum allowable total loop resistance is 40 Ohms. This equates to 20 ohms per leg. Above 3.5Km, capacitance becomes an issue. Shielded cable is unnecessary and may add sufficient capacitance to create an Earth Fault on a long loop circuit.
11. The maximum current is 750mA; however, the maximum current the analogue addressable loop should be designed to carry is 350mA, half the loop driver capacity. This design limit allows the loop to continue to operate to design capacity should an open circuit occur in the loop.

12. The analogue addressable loop should never be used to supply 24Vdc to field devices other then those approved by Pertronic Industries for use on the analogue addressable loop wiring.
13. Restrictions relating to the installation of the analogue addressable loop wiring in the field are regulated by AS1670.1, AS 1668.1, and AS2220.2; the installation requirements of AS3000 are now replaced by the installation requirements of AS/ACIF S009. All of these standards deal with segregation and with wiring integrity relating to protection from fire, water, and mechanical damage.

17.2 Common Finding Techniques

The following tests should be performed before connecting the analogue addressable loop circuit to the FIP:

1. Check the loop circuit continuity by placing a short across the conductors at one end of the cable, and reading the circuit resistance with a Multimeter set to ohms across the conductors at the other end of the cable. If an open circuit is present, keep in mind that all loop responders and loop relay cards have built-in isolators which will be in the open circuit state when the loop is not energised. There may also be System Sensor M500X loop isolators in the circuit. The positive in and out of all these devices must be bridged out for this continuity test. While the Multimeter is set to ohms and the short is in place, check the loop resistance to ensure that the loop resistance is below 40 ohms in total—20 ohms per leg.
2. Check that the devices have been correctly wired (correct polarity connections). Remove the short from the cable applied in the previous test so that the conductors at both ends of the loop circuit are open and clear of each other. Set the Multimeter to diode test, and place the leads across the wires at one end of the cable. The reading should be approx 0.645. Now reverse the leads of the Multimeter on the cable and the reading should be approx 1.2 or higher. If both readings are low, this indicates an incorrectly wired device, or, possibly, a short on the wiring; each device on the loop incorporates a diode and is therefore polarised.
3. Check the loop circuit for resistance to Earth.

   Select ohms on the Multimeter, and check from each leg of the loop field wiring circuit and an Earth terminal on the FIP (ensure the FIP Earth terminal is bonded to the building Earth before commencing this test). If the resistance reading falls below 20kΩ, an 'Earth Fault' condition will be created if the circuit is connected to the FIP. Find the cause of the low Earth resistance and rectify it. Possible causes of a low Earth resistance include the following:
   - moisture;
   - inadequate insulation from the surrounding structure, equipment or materials; or
   - mechanical damage, such as a crushed cable or a screw through the cable.

   Note: The loop circuit resistance measurement to Earth should be infinity, or at least very high; any resistance below 500kΩ should be viewed with suspicion. Do not use a high voltage insulation tester such as a 'Megger' to measure Earth resistance while devices are connected to the loop circuit—because this will damage all devices.
4. Check the voltage output reading from the loop card terminals.

   Set the Multimeter to DC volts, and read the voltage coming from the loop card terminals in the FIP with the loop circuit disconnected. The reading will be approximately 24Vdc. Now, connect the loop circuit field wiring to the loop card terminals, and ensure previous tests have been carried out and are clear of Faults.
   Again, take voltage readings from the connected loop card terminals. The voltage readings now will be approximately 16Vdc. If the voltage reading is lower by 3 volts or more, this indicates a possible short-circuit, or other load, on the loop field wiring—see Note 3 above.

Note: If the positive terminals on loop responders and isolators were bridged out to perform the loop resistance tests, ensure the bridges are removed prior to connecting the loop wiring to the FIP.

17.3 RS-485 and RS-232 Circuits

All wiring external to the FIP should be twisted pair cabling.

RS-232 wiring is limited to 15 metres.

RS-485 wiring is limited to 1.8 kilometres.

When wiring from the RS-485 port to a mimic panel, use a 4-core twisted pair communications cable. This wiring is not looped back to the FIP.

17.4 Loop Responder Wiring

Loop responders can be powered from the analogue addressable loop wiring, but if loading on the loop responder/s exceeds the recommended level, then a separate external power supply must be used. The additional power supply must be electrically isolated from the FIP power supply.

The general rule is that where more than 4 fully loaded loop responders are connected on one analogue loop, a separate power supply is required.

Field Wiring of the Loop Responder.

The field wiring can be two-core flat cable; there is no requirement for twisted pair cabling for conventional circuits; however, twisted pair cabling can be used as well.

The maximum allowable number of detectors per circuit is 40.

Notes:

1. Loop Responder circuits have a floating datum: the current draw on the circuit is referenced, and the alarm threshold is calibrated to compensate for load conditions.

2. Where water penetrates the wiring on the Loop Responder circuits, this may generate a “Hi Fault” condition.

3. If some detectors are removed once the circuit has compensated, then a “Low Fault” condition will occur.

17.1 Laptop Computer Connections

Warning.

1. Always check that the panel is clear of Earth faults before connecting the laptop.

Under no circumstances should an earthed laptop computer be connected to a FIP that is showing an Earth fault. If this is done, the Earth fault may track via the laptop Earth and destroy the RS-232 ports on both the FIP and the laptop computer.

If it is necessary to use a laptop on a panel with an Earth, then use the laptop in battery mode without the Mains power pack connected (or use an isolated Mains power pack).

2. DO NOT disconnect the Earth strap that connects the Master Board to the metal cabinet. This does not solve the problem; it only means that the panel does not display the Fault. The Fault is still there but is no longer registered.

F100A OPERATING INSTRUCTIONS

To Isolate a Zone

1. Press "Menu" - **F6**
   - This brings up the User menu.
2. Press "Isol" - **F4**
   - Accesses the Isolate menu.
3. Press "Zone" - **F1**
   - The screen will display Zone 1.
   - Press INCR (F2) to increase the zone number or DECR (F1) to decrease the zone number until the desired zone is displayed.
4. Press "Enter" – **F5**
   - The screen indicates the zone is isolated.
5. Press "Esc" – **F6** (3 Times)
   - This return to the Fire-Fighter Screen.

To De-Isolate a Zone or Device

Follow the instructions exactly as listed above.

The "Enter" **F5** button as listed in Step 4 toggles Zone or Device between Isolated and Normal.

To Isolate a Device (Detector or Module)

1. Press "Esc" - **F6**
   - This brings up the User menu.
2. Press "Isol" - **F4**
   - Accesses the Isolate menu.
3. Press "Zone" – **F2**
   - The screen displaysL1D00.
   - Press INCR (F2) to increase the loop number or DECR (F1) to decrease the loop number until the desired loop (1 to 4) is displayed.
   - Press "NEXT", the cursor will flash on the D.
   - Press F1 or F2 to toggle between Modules and detectors.
   - Press "NEXT" to select the address of the device.
   - Press F1 or F2 to increase or decrease the device number.
4. Press "Enter" – **F5**
   - The screen indicates the device is isolated.
5. Press "Esc" – **F6** (3 Times)
   - This returns to the Fire-Fighter Screen.

To Reset an Alarm

1. Press "RESET" key
2. Press "ACK" key
3. Repeat for all alarms

To Acknowledge an Alarm

Press "ACK" key

~ the display shows

"ACK'd ALM"

~the local buzzer is silenced.

19. Appendix C – Isolate Timer Module

The Isolate Timer Module is suitable for panel s/w 4.56a or greater.

19.1 Product Overview:

Isolate Timer Module is an analogue addressable device that provides a switch, indication, countdown timer, and output signals to allow building occupiers to isolate a zone for a preset time where activities may cause unwanted fire alarm activations.

19.2 Functions:

- Enables the Isolation of a zone at the push of a button
- Contains visual indication that the zone has been isolated by the panel
- Displays the Zone state—that is, Normal, Isolate, or Isolated Alarm.
- Provides ability to isolate a zone for a programmable period of time
- Contains Visual and Audible warning that the Isolate countdown timer is about to expire.
- Mounts in standard single-gang flush or surface-mount electrical fittings and is supplied with a protective plastic cover for installation during building construction.
- Connects to a Pertronic Analogue Addressable loop.

19.3 Features:

- Two buttons are provided for simple operation of the device.
  - Isolate Button: Default setting of countdown timer in increments of 1 hour up to 8 hours isolation. Sends the Isolate command to the Panel
  - De-Isolate Button: Clears the countdown timer and sends the de-Isolates command to the panel.
- An Isolate LED provides 'real time' indication that the zone has been isolated by the panel. The LED flashes 5 minutes before the countdown timer is about to expire.
- If a device is activated into the alarm state within the isolated zone, the Alarm Led illuminates.
- An LCD Display provides the real-time state of the Panel. If the countdown time is about to expire with a device in alarm, then the user may increase the isolate time to prevent a false activation.
- Provides a powered output for connection to an external strobe, and a clean contract relay. Both outputs are active during the isolate condition.
- Audible indication that the timer is about to expire. It activates 5 minutes before the timeout period. This can be silenced by either extending or clearing the countdown time.
- For security, an 'External Access Lock' input enables the device operation to be locked by an external switch.
- Uses only two Analogue addresses and is easily configured using Pertronic panel configuration utility.
- Each unloaded Zone Interface Timer draws 10mA in the quiescent state. This allows for a maximum of 10 Zone Interface Timers per loop.

19.4 Panel configuration

A single zone isolate timer occupies two loop addresses with the 'as set' address for its input module and the address +1 for its output module.

To set for its intended function, configure the input module as type 'Isolate Switch,' and assign the required zone.

The only flags (for input module type Isolate Switch) that can be selected are ‘Visible’ and ‘Logged’; all other flags are disabled.

It is important to note that outputs assigned to the Isolate switch are only active when there is an active (isolated) alarm in the associated zone.

Uses of this device other than its intended purpose are at the discretion of the installer.

Please refer to the Installation Note for full information on this product

20. Document Change History

Issue Number	Date	Reason for Update	Description of Changes	Author
14	6/8/2004		Derived from F100A NZ Issue 22, Nov 2003. Changes to text made by J Castle. Fig 15.4, 15.5 updated. Sections 16, 17 added.	SimonE JackC
15	22/02/2005	CN 511	Virtual detectors-all types. Duct probe facility. LED mapping	SimonE
16	22/06/2005		Manual Corrections	SimonE
17	06/09/2005	CN 600	Day/Night mode function	SimonE
18	31/07/2006	CN 681	Added Section 8.4.4: Buzzer Timer option Amended Section 4.8: Isolation between Zones Updated Figs 8.1 and 8.2 Amended Section 9.2: Local MCP Input	SimonE GeoffT
19		CN923	Amended Table 4.2 Heat Detector alarm levels, made changes in accordance with CN923 also various editing corrections, also added section 19 Isolate Timer Module Changed description for operation of ISO switch type etc.	SimonE PeterF
20	15/10/09		Replaced Panel Images	HalB DerekW
21	25/05/2010	CN1045	Updated for Atmega2561 processor version. Updated Section 1.3, 9.3, Tables 4.1.3, 4.6.1, 10.14 and 13.1.1.	SimonE DerekW HalB
22	03/11/2010	Corrections	Updated Maint. Level values in Table 4.6.3,	SimonE, DerekW, HalB
23	22/03/2011	Updates to System Wiring diagram. Figure 21.	Deleted obsolete v.1.2 11/97 power supply from Fig. 21, replacing it with current 4A power supply. Added second diagram, Fig. 22, showing the optional 12A power supply. Minor text edits associated with power supplies.	DerekW, HalB

Issue Number	Date	Reason for Update	Description of Changes	Author
Issue 24	23/06/2012	Updates and Revisions	Section 6 Revised corrected 8.5 Clarified 9.3 24h Test (8am flag) function	PeterF
Issue 24.1	11/2012	Description of Loop Diagnostic Menu	Added 8.11 Diagnostic Display	RDB
Issue 25	14/06/2013	Changes for v5.20 release	Section 8.10.1 Section 9.2.1 & 9.2.2 Added Section 9.3.7 (SPR Evac Disable flag) New SPR input EOL value explanation in Section 10.2	JDE
Issue 26	05/06/2014	Changes for v5.22	Add FAAST; remove Filtrex. Updated table 2.4.2	JDE , RDB
Issue 26.1	05/12/2016	Three changes: I. Updates section 2.7 II. Deleted a sentence from section 5.4.1 & section 5.4.2 “refer to…information.” III. Added an error message. IV. Updates 1.3 Specification	I. Added section 2.7 II. There isn’t a F100A LCD Mimic manual. III. Added an error message to Table 8.5.3: System Fault Events. IV. Section 1.3, cabinet dimensions updated.	Sunny Sun
Issue 26.2	24/05/2017	Change to “Buzzer Disabled” message behaviour.	Added new text to section 2.7 CN2258/CN2279	JPF
Issue 26.3	16.09.20	Change to Acclimate Alarm specs	Added text to table 4.6.3 CN2839	RJK

Table 20.1: Change History