• **Melbourne**

Unit B2
2A Westall Rd
Springvale
VIC 3171
Tel (03) 9562 7577
Fax (03) 9562 8044
sales.vic@pertronic.com.au

• **Sydney**

Unit 19
287 Victoria Rd
Rydalmere
NSW 2116
Tel (02) 9638 7655
Fax (02) 9638 7688
sales.nsw@pertronic.com.au

• **Brisbane**

Unit 3
43 Sandgate Rd
Albion
QLD 4010
Tel (07) 3255 2222
Fax(07) 3054 1458
sales.qld@pertronic.com.au

• **Adelaide**

65 Manton St
Hindmarsh
SA 5007
Tel (08) 8340 9533
Fax (08) 8340 9544
sales.sa@pertronic.com.au

• **Perth**

3/71 Beringarra Ave
Malaga
WA 6090
Tel (08) 6555 3008
Fax (08) 9248 3783

www.pertronic.com.au


# PERTRONIC
# F120A
# AUTOMATIC FIRE ALARM
## (AS4428.1:1998)
# TECHNICAL MANUAL
## AUSTRALIA

**Valid For F120A:**

| | |
|---|---|
| **PCB Hardware:** | **v2.20 and greater** |
| **PCB Firmware:** | **v4.24 and greater** |
| **Loop Driver II Hardware:** | **v1.15 and greater** |
| **Loop Driver II Firmware:** | **v3.1 and greater** |
| **Config Utility:** | **v2.42 and greater** |

# Issue 17

Serial Number:

Date of Manufacture: … / … / …

© Pertronic Industries Pty Ltd

## Acronyms:

| | | |
|---|---|---|
| **AAF** | Alarm Acknowledge Facility | |
| **AVF** | Alarm Verification Facility | - a facility designed to minimise 'false alarms' by ensuring multiple operation of devices (smoke detectors and M512 Modules) before the alarm is raised. |
| **BCO** | Bell Cut-Off | - Bell Cut-Off switch terminates the output from the panel BELL relay. Two BCO switches are provided, an External BCO switch for Brigade and Tester use and an Internal BCO for Fire Technician use. |
| **DBA** | Direct Brigade Alarm | - Fire Sprinkler pressure switch/transmitter unit. |
| **EOL** | End of Line | - End of Line termination, nominally 10kΩ Resistor, used to monitor the presence and integrity of the detector circuit. |
| **FFF** | Fire-Fighter Facility | |
| **LCD** | Liquid Crystal Display | |
| **LED** | Light Emitting Diode | |
| **MCP** | Manual Call-Point | |
| **OC** | Open-circuit | |
| **PCB** | Printed Circuit Board | |
| **ROM** | Read Only Memory | - a one time programmable device for storing system data. |
| **SC** | Short-circuit | |

# CONTENTS


| | | |
|---|---|---|
| 1. | Introduction | 1 |
| 1.1 | Functional Description | 1 |
| 1.2 | Overview of Features | 2 |
| 1.3 | Specification | 3 |
| 1.4 | Cable Requirement | 4 |
| 2. | F120A Front Panel Controls and Display | 5 |
| 2.1 | Fire-Fighter Facility | 6 |
| 2.2 | Engineering Controls | 7 |
| 2.3 | Alphanumeric LCD Display and Menu Functions | 8 |
| 3. | System Startup and System Tests | 10 |
| 3.1 | System Initialisation | 10 |
| 3.2 | Normal Operation System Tests | 11 |
| 4. | Addressable Devices | 12 |
| 4.1 | Detectors | 12 |
| 4.2 | Virtual Detectors | 14 |
| 4.3 | Manual Call-Points | 14 |
| 4.4 | Monitor Modules | 15 |
| 4.5 | Loop Responder | 16 |
| 4.6 | Loop Input Device Parameter Default Settings | 16 |
| 4.7 | Loop Relays | 16 |
| 4.8 | Fan Controller | 17 |
| 4.9 | Isolation Between Zones | 18 |
| 5. | RS485 Bus | 19 |
| 6. | Mapping | 20 |
| 6.1 | Loop Device Output Qualification | 21 |
| 6.2 | Output Types | 22 |
| 6.3 | Input Types | 23 |
| 6.4 | System Events | 25 |
| 6.5 | Boolean Logic Blocks | 26 |
| 6.6 | Timers | 27 |
| 6.7 | Zonal Timers | 30 |
| 6.8 | Zonal Alarm Acknowledgement Facility | 30 |
| 6.9 | Network Inputs | 32 |
| 6.10 | Fan Control Blocks | 33 |

7. Operating The Fire-Fighter Facility 36
7.1 Event Display Queues 36
7.2 Devices in Alarm – Acknowledge, Reset, and Isolate 37
7.3 Isolate, Fault and System Events Queues 38

8. Operating the User Menu 39
8.1 Engineer – Engineer's Menu 39
8.2 Status – Status Monitor 39
8.3 History – Display Historical Event Log 42
8.4 Isolate – Isolate Menu 42
8.5 System - Display the System Status 44
8.6 Test - System Tests 44
8.7 Clock - Set System Time and Date 45
8.8 Reset – Global Reset 46

9. Operating the Engineer's Menu 47
9.1 Devices – Add, Modify Device Configuration 48
9.2 Zones – Configure Zones and Edit Zone Descriptors 51
9.3 Groups - Configure Group Outputs 52
9.4 LogicBlk – Configure Boolean Logic Blocks 52
9.5 Mimics - Configure LED and LCD Mimics 53
9.6 Learn - Auto Learn Function 53
9.7 General - Configure General System Options 54
9.8 Timers – Edit General-Purpose Timers 57
9.9 Keycode - Change the Engineer's Menu Password 58
9.10 SysEvent – System Event Outputs 58
9.11 24H Test - Set 24-Hour Test Start Time 58
9.12 Network 58
9.13 FanCtrl – Fan Control Block configuration 59
9.14 Defaults – Reset Configuration to Defaults 60
9.15 Ext Bus - Extender configuration menu 60

10. System Features 61
10.1 Fire Signalling Relay (Master Alarm) 61
10.2 MCP Input 61
10.3 Fault Signalling Relay 61
10.4 Warning System Relay 61
10.5 Isolate Warning System (WARN SYS ISOLATE) 62
10.6 External Bell Circuit. 62
10.7 External Bell Isolate (EXT BELL ISOLATE) 62

10.8 ACF Relay 62
10.9 Isolate Ancillary Control Facility (Isolate ACF) 62
10.10 Door Holder Relay 63
10.11 Door Holder Isolate 63
10.12 Battery Fail Relay 63
10.13 Evacuation Test 63
10.14 Device and Zone Isolate & Isolate Removal 63
10.15 Internal Sounder (Buzzer) 63
10.16 24-Hour Auto Test 63
10.17 Walk Test 64
10.18 PCB Master Reset (RESET): SW2 64
10.19 Memory Lock: SW1 64
10.20 Timer Power Supply. 65
10.21 Battery Capacity. 65
10.22 Power Supply Fault Indication 66
10.23 Door Interlock 66
10.24 Event Log 66
10.25 Event Date and Time 67
10.26 Loop Driver Boards 67
10.27 Earth Connection and Monitoring 67
10.28 External Sounder 67

11. LCD Messages 68
11.1 General Information Messages 68
11.2 System Faults 68
11.3 Loop Device Messages 70

12. Detectors and Modules 71
12.1 Alarm Sensitivity Levels 71
12.2 Pre-Alarm Sensitivity Levels 71
12.3 Drift Compensation on Loop Driver 1 Boards 71
12.4 Maintenance Level 72
12.5 Low Fault Signal 72
12.6 Selecting Detectors for Maintenance 72
12.7 Detector Sensitivity Table 73
12.8 COPTIR/PTIR Sensitivity Table 74
12.9 FAAST Sensitivities 74
12.10 Actuating Devices 75
12.11 System Modules 75

13. Loop Driver Compatibility 76
- 13.1 Hardware Differences 76
- 13.2 Firmware Differences 77

14. Ordering Information and Spare Parts 78
- 14.1 Pertronic Panels 78
- 14.2 Addressable Loop Devices 79
- 14.3 Spare Parts 79

15. Installation Instructions 81

16. Monthly Testing 82

17. Diagrams 83
- 17.1 F120A PCB Layout 83
- 17.2 PCB Access Points 84
- 17.3 Detector Wiring 85
- 17.4 Bell Wiring 85
- 17.5 Loop Relay Wiring 86
- 17.6 System Wiring 87

# FIGURES


**Figure 1.1: F120A Block Diagram** 1

**Figure 2.1: F120A Front Panel** 5

**Figure 4.1: Device Labelling** 12

**Figure 4.2: Example of Virtual Detector Use** 14

**Figure 4.3: Isolation Between Zones** 18

**Figure 6.1: Mapping Structures** 21

**Figure 6.2: Boolean Logic Blocks** 26

**Figure 6.3: Fan Control Blocks** 33

**Figure 7.1: Fire-Fighter Facility** 36

**Figure 12.1: Drift Compensation Overview** 71

**Figure 13.1: Isolated Loop Driver Board** 76

**Figure 17.1: Detector Wiring** 85

**Figure 17.2: Bell Wiring** 85

**Figure 17.3: Loop Relay Wiring** 86

**Figure 17.4: System wiring—using 4A Power Supply** 87

**Figure 17.5 System wiring—using 12A Power SupplyCabinet Dimensions** 88

**Figure 17.6: Cabinet Dimensions** 89

# TABLES


Table 4.1: Detector Type Designators 12

Table 4.2: Device Parameters 13

Table 4.3: Input Device Type Designators and Description 15

Table 4.4: Default Device Settings 16

Table 4.5: Output Device Types 17

Table 4.6: Fan Controller Device Types 17

Table 5.1: RS485 Devices 19

Table 6.1: Output Types 20

Table 6.2: Input Type Descriptions 24

Table 6.3: System Event Types 25

Table 6.4: Logic Block Flags 26

Table 6.5: Block Input Function 27

Table 6.6: Timer Control Inputs 27

Table 6.7: Timer Configuration Flags 28

Table 6.8: Timer Events 28

Table 6.9: Timer Example 29

Table 6.10: Network Input Configuration Flags 32

Table 6.11: FCB Input Descriptions 33

Table 6.12: FCB Output Descriptions 33

Table 6.13: FCB Flags 34

Table 6.14: Input Priorities 34

Table 6.15: Event Generation 35

Table 9.1: Engineer's Menu Tree 47

Table 9.2: Fields of the Device Edit function 48

Table 10.1: Power Supply Fault Indication 66

Table 10.2: Door Interlock Faults 66

Table 11.1: LCD General Information Messages 68

Table 11.2: LCD System Defect Messages 69

Table 11.3: LCD Loop Device Messages 70

Table 12.1: Detector Sensitivity Table 74

Table 12.2: COPTIR/PTIR Properties 74

**Table 13.1: Loop Driver Firmware Differences** **77**

**Table 13.2: Loop Driver II / I Isolation Variation** **77**

# 1. INTRODUCTION

## 1.1 Functional Description

The Pertronic Industries Pertronic **F120A** is an analogue addressable automatic fire alarm system designed for medium to large building applications. It may have 2 to 20 addressable loops giving a maximum of up to 3180 addressable smoke or heat detectors plus up to 1980 manual call points, modules, or addressable relays for the system.

All functions are controlled by software which is stored in non-volatile flash memory, and can only be modified by replacing the integrated circuit. The site specific configuration is held in EEPROM, and can only be modified with the Configuration Memory Lock switch in the OFF position.

The **F120A** conforms to Australian Standard 4428.1:1998.

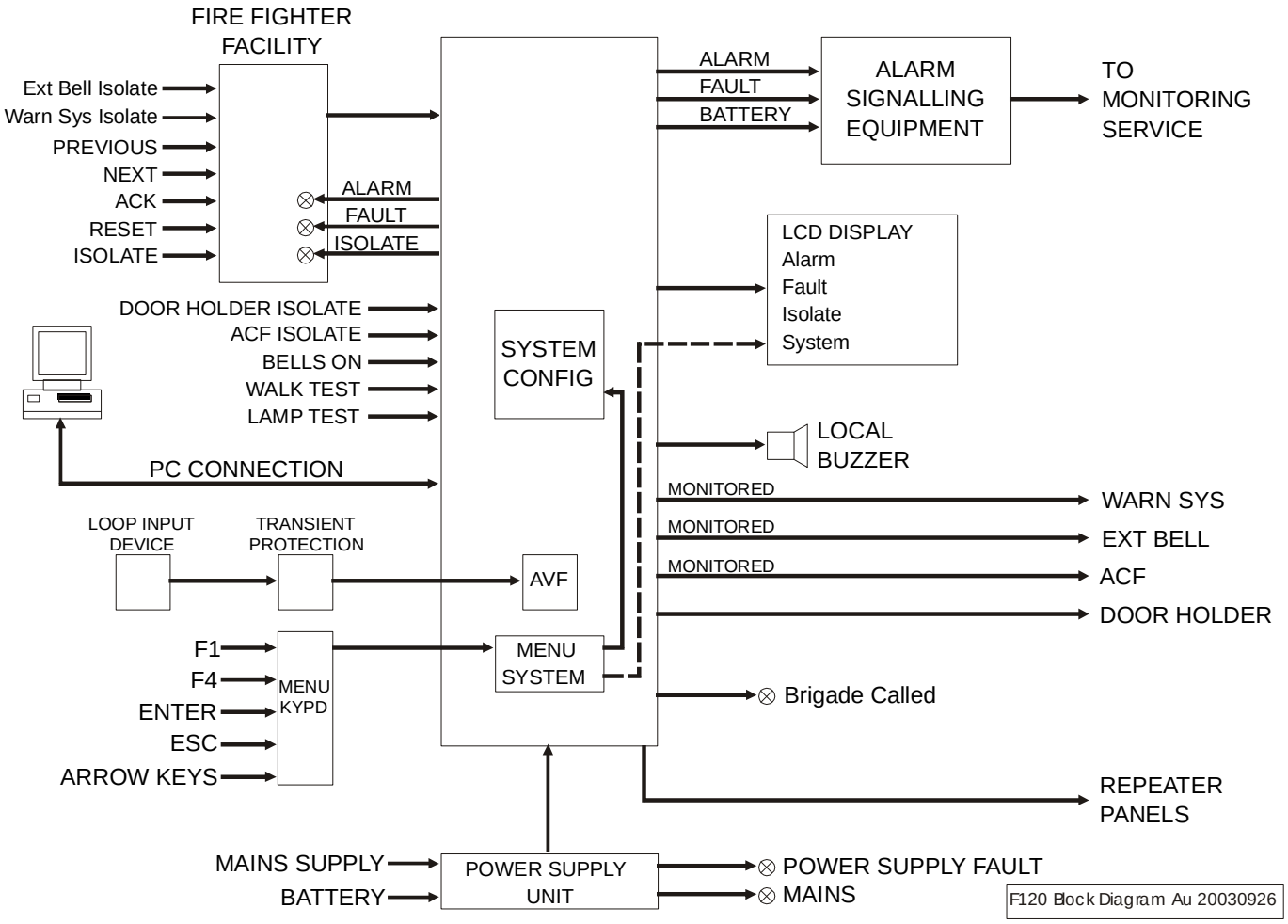


Figure 1.1: F120A Block Diagram

## 1.2 Overview of Features

- The **F120A** has comprehensive front panel controls, including:
  - Fire-Fighter's Facility to AS 4428.1
  - Door Holder Isolate control.
  - ACF Isolate control.
  - Walk Test button
  - Lamp Test button.
  - Evacuation test control (Warn System On)
- System configuration data may be entered manually through the front panel controls or from a laptop or PC using an RS-232 connection – this also allows the current system configuration data to be downloaded and digitally stored.
- The **F120A** has a minimum of two independent analogue addressable loops, expandable to 20
  - The loops can accept addressable input devices and addressable relays.
  - The loops are short circuit and over-voltage protected.
- Input devices include Detectors, Manual Call-Points, Loop Responders and Modules.
  - Each input device can be configured for full Fire system operation or indicator only operation.
  - Each input device can be configured to disable any external bell operation, warning system operation, or brigade call operation.
  - Each input device can be mapped to activate the onboard relays, DHR, and ACF.
  - Each input device can be mapped to multiple loop relays and display LEDs.
  - Each input device can be mapped to any zone.
  - Each zone can be mapped to multiple loop relays and display LEDs.
  - The sensitivity of each detector can be independently adjusted.
- Addressable Loop Relays can be configured as relays, Sounder relays, ACF relays, or as Door Holder relays.
- On-board relays for external signalling – monitored external Bell relay, monitored Warning System relay, master alarm (fire) relay, Fault relay, Battery Fail relay, monitored ACF relay and a Door Holder relay.
- Isolation of zones or individual loop input devices is possible.
- Comprehensive system test functions include testing all detectors and a battery load test carried out at a predetermined time every 24 hours. A menu-initiated test function enables the display of individual detector analogue values on the LCD display.
- A 1999-event historic Event log, each entry being time stamped. The log may be downloaded to a laptop or PC through the RS232 connection.
- Control inputs include a Panel-MCP and an External Fault input.
- A door interlock provides warning of door closure when panel control functions are in the off-normal state.
- Day/Night mode provides all detectors with a second Sensitivity value, used when the panel enters Night Mode.
- Alarm Acknowledge Facility provides a delay from a local non-brigade calling alarm before calling the brigade. The delay can be extended ONCE by pressing an Acknowledge button and allows the occupant the opportunity to clear the alarm before the brigade is called.
- Automatic Daylight Saving adjustment.
- Configurable Fault alert filters minimise nuisance call-outs – suitable for temporary use with intermittent faults.

## 1.3 Specification

| | | |
|---|---|---|
| **Cabinet:** | Size (16U): | 550(w) x 800(h) x 185(d) mm. |
| | Size (28U): | 575(w) x 1330(h) x 380(d) mm. |
| | Size (40U): | 575(w) x 1865(h) x 380(d) mm. |
| | Material: | 1.2mm mild steel, powder-coated Hybrid Cream Wrinkle. |
| | (Colour code HL532/8160 (RAL9001), Manufacturer: Croda NZ). | |
| **Power Supply:** | 200 - 260VAC, 50Hz, 60 or 200VA | |
| | Battery charger: | 27.4Vdc, 4A (3A continuous) or 12A max, nominal at 20°C. |
| | | Temperature compensated - 26.4V@ 35°C to 28.2V@5°C. |
| | Internal Battery: | 24Vdc sealed lead-acid: 6.5Ah to 24Ah. |
| | | (Automatic 24-Hr Battery Test.) |
| **Quiescent Current:** | 125mA | **F120A** panel only. |
| | +40mA | for each 2-loop module (LD 1 PCB). |
| | +70mA | for each 2-loop module (LD 2 PCB, v2.00 firmware). |
| | +53mA | for each 2-loop module (LD 2 PCB, v2.02 firmware). |
| | +3.5mA | groups of 10 detectors, Manual Call-Points or modules. |
| | +4mA | each Relay Responder. |
| | +20mA | each Loop Responder. |
| | +55mA | Panel in 'Fault' (backlight on). |
| | +150mA | Panel in 'Fire' (relays and backlight on). |
| **Zone Allocation:** | Up to 256 physical zones. Where network sites require unique zone numbers for each panel an offset feature allows zone numbers in the range 0001 to 9999 to be used for the network. See 9.12 for details. | |
| **LED Display:** | Up to 2048 display LEDs. | |
| **Detector and Manual Call-Point Circuits:**<br><br>**NOTE 1**<br>Some detector models only support 99 loop addresses–see section 14 for details | The basic **F120A** has two analogue addressable loops, expandable to 20 loops with 2-loop expander modules. Each loop can have up to 159 **NOTE 1** detectors plus up to 99 manual call-points or modules. A four loop **F120A** will accept a maximum of 636 detectors and 396 Manual Call-Points or Modules. A twenty loop **F120A** will accept a maximum of 3180 Detectors and 1980 Manual Call-Points or Modules. Each detector and call-point can be mapped to a zone, and to multiple LEDs and loop relays. Each device can be configured to independently activate any of **EXT BELL, WARN SYS**, **DHR** or **ACF/ACFM** relays. Each device can be configured for full 'Fire', Brigade only, or Indicator Only operation. Loop Isolators are used to separate the zones within loops. The detectors are tested regularly during normal operation of the system, or on demand through the menu. Zones and individual detectors and Manual Call-Points may be isolated from the system.<br><br>Detector sensitivities are individually adjustable: Ionisation detectors have 5 levels, Heat detectors 4 levels and Photo detectors 4 levels. | |
| **Addressable Relays:** | Each loop can have up to 99 loop relays connected. The address space is shared with the addresses of the manual call-points. The sum of manual call-points plus addressable relays cannot exceed 99. No two addresses can be the same. There are four types of addressable relay – sounder, ACF, door holder and relay types. | |
| **Loop Characteristics:** | Maximum Loop Length: | 1km (258 devices), 1.0mm$^2$ cable. |
| | Maximum Loop Resistance: | 50Ω. |
| | Conductor Size: | 1.0mm$^2$ to 2.5mm$^2$. |
| | Cable Type: | Twisted pair cable recommended. |

| | |
|---|---|
| **Device Isolation:** | Detectors and monitor inputs (eg MCP, PSW, FSW, VMD, etc) can be individually isolated. Zones may also be isolated. |
| **Fire Relay:** | 1 changeover contact rated 1.25A @ 24Vdc, normally de-energised. |
| **Fault Relay:** | 1 changeover contact rated 1.25A @ 24Vdc, normally energised. |
| **Warning System Relay:** | One normally-open contact rated 3A @ 24Vdc, with circuit monitoring.<br>The maximum combined Sounder load is <4.0A using the integral power supply. Individually mappable. |
| **External Bell Relay:** | One normally-open contact rated 3A @ 24Vdc, with circuit monitoring.<br>The maximum combined Sounder load is <4.0A using the integral power supply. Individually mappable |
| **ACF Relay:** | Ancillary Control Function. Single contact, normally-open, monitored by a 10kΩ End of Line resistor. Rated 2A @ 30Vdc. Mappable as ACF. |
| **Battery Fail Relay:** | Form C, change-over contacts. Rated 2A @ 30Vdc. Operates when battery voltage falls below 23.5Vdc. |
| **Door Holder Relay:** | Single Form C, change-over contact, rated 5A @ 24Vdc. Not monitored. |
| **Auxiliary Outputs:** | 8 mappable auxiliary outputs on PCB versions 2.1x and greater (7 on PCBs version 2.0x); FET current sink drivers; for internal panel use only. |
| **Earth Monitoring:** | For normal operation the system Earth resistance shall be greater than 50kΩ. An Earth Fault will be detected if the system Earth resistance is less than 500Ω. 'Earth Fault' may be displayed for Earth faults between 500Ω and 50kΩ. |
| **Other Functions:** | 1999-event Historical Event Log. Software Logic functions and Timers. Monitored Sprinkler alarm input. General-Purpose, brigade interface (Fire, Fault, Isolate, Test, ACF). Silence Alarms. ACF isolate. Door Holder isolate. Evacuate. Walk Test switch. Door Interlock micro-switch. |
| **Connectivity:** | Printer/Pager/Nurse Call/Modbus interfaces available via external translator on RS485 interface. Maximum current draw on External RS485 bus is 1.5A.<br>RS232 Serial connection for external configuration & monitoring (modem-compatible). |
| **Options:** | Conventional Circuit interface; LED repeater panel (up to 8 addressable panels plus global panels); LCD repeater panel (up to 8 addressable panels plus global panels). Note: a maximum of 32 devices may be connected to the Mimic port. |
| **Environmental:** | Temperature: -5°C to +45°C<br>Humidity: +40°C or below, ≤95% relative humidity<br>+41°C to +45°C, ≤75% relative humidity |

## 1.4 Cable Requirement

All cabling for the Pertronic **F120A** shall comply with AS3000 (Australian Wiring Rules) and AS1670.1 (Fire Detection)

**Detection Cable Characteristics:** Maximum detection cable loop resistance shall not exceed 50 ohms, therefore each leg of the circuit shall not exceed 25 ohms (2 x 25 = 50)

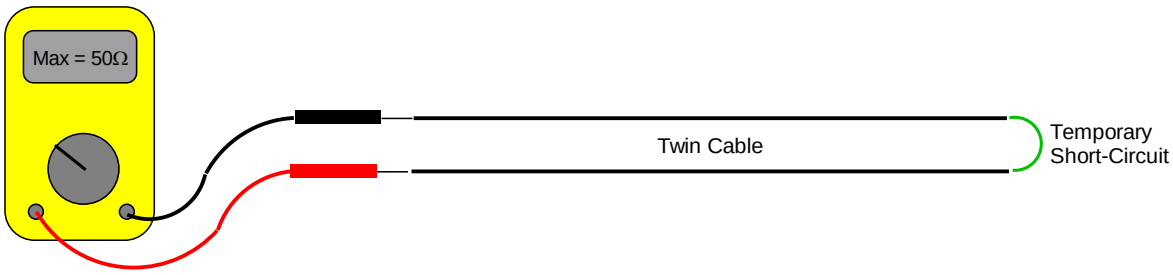

# 2. F120A FRONT PANEL CONTROLS AND DISPLAY

The front panel of the **F120A** uses a 4-line by 40-character LCD display.

The display is within the Fire-Fighter Facility (enclosed by a red border), together with push-buttons and LED indicators.

Outside the Fire-Fighter Facility, additional engineering controls (push-buttons and indicator LEDs) are available for use by the building manager and fire alarm engineers.

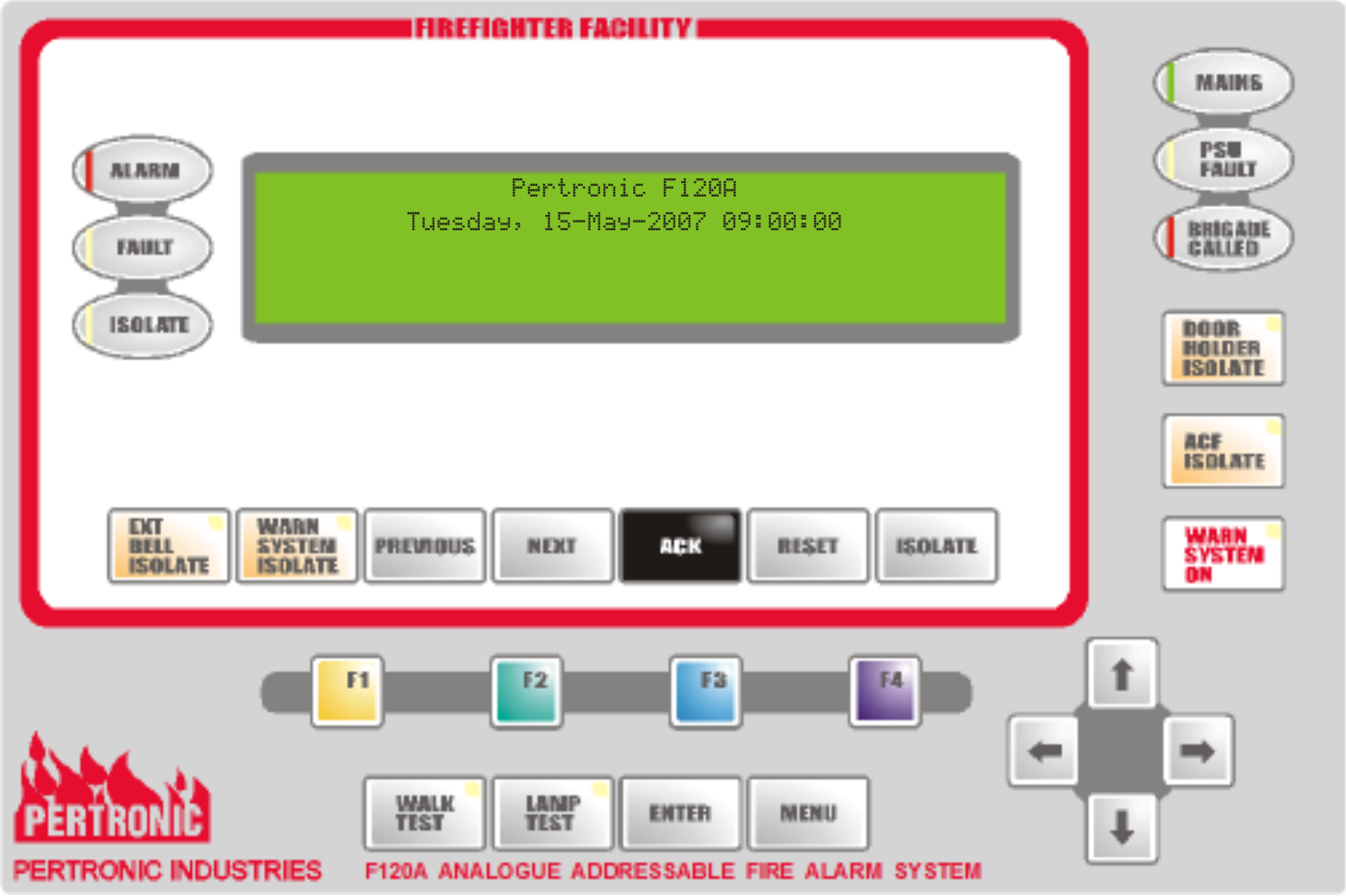


Figure 2.1: F120A Front Panel

## 2.1 Fire-Fighter Facility

The thick red border as shown in Figure 2.1: F120A Front Panel encloses the Fire-Fighter Facility.

The three Indicator LEDs are:

| | |
|---|---|
| **ALARM** | Normally OFF. Flashes when a 'Fire' condition occurs. When all current fire conditions have been acknowledged (by pressing **ACK** for each condition), the **ALARM** LED turns ON continuously.<br>The ALARM indication latches ON after an 'Alarm' condition has activated. |
| **FAULT** | Normally OFF. Flashes when a 'Fault' condition is present (for example, a detector fault, loop fault, or battery charger fault).<br>The **FAULT** indication is not latched.<br>**FAULT** may be on simultaneously with **ALARM**. |
| **ISOLATE** | Normally OFF. Turns ON when a zone or a device is isolated |

The seven push-buttons have the following functions:

| | |
|---|---|
| **EXT BELL ISOLATE** | This push-button disables the operation of sounders connected to **EXTERNAL BELL** output. When the push-button LED is lit, the external bell is disabled; when the LED is extinguished, the operation of the external bell is enabled. |
| **WARN SYS ISOLATE** | This push-button isolates the sounders connected to **WARNING SYSTEM** output and to isolate loop relays configured as 'Sounder Relays'. When this function is active the LED is lit. This has a toggle function as alternate presses of **WARN SYS ISOLATE** will correspondingly enable or disable **WARNING SYSTEM** and loop relays assigned as Warning System. |
| **PREVIOUS** | This push-button scrolls current alarms (active and acknowledged alarms) on the LCD display. Each time the button is pressed, the next oldest alarm is displayed until the oldest alarm is reached. If there are no (more) alarms, current Faults are displayed in a similar fashion; and if there are no (more) alarms or Faults, any isolated devices or zones are displayed. |
| **NEXT** | This push-button operates in the same way as **PREVIOUS**, except that the next most recent alarm is displayed each time the button is pressed until the latest alarm is reached. If there are no current alarms, Faults, or isolated devices or zones, no action is taken. |
| **ACK** | This push-button acknowledges the alarm currently displayed on the LCD. If this is the only non-acknowledged alarm on the system, the local buzzer is silenced, and the **FIRE** LED stops flashing but remains lit. If there are remaining non-acknowledged alarms, **FIRE** remains flashing. **ACK** is also used to confirm **RESET** and **ISOLATE** actions. |
| **RESET** | This push-button resets the currently displayed detector or manual call-point that is in an alarm state. The **F120A** requests **ACK** be pressed to confirm the reset operation. If this is not done within 10 seconds, or if any other key is pressed, the reset function is cancelled. |
| **ISOLATE** | This push-button isolates the currently displayed detector or manual call-point that is in an off-normal state. The **F120A** requests **ACK** be pressed to confirm the isolate operation. If this is not done within 10 seconds, or any other key is pressed, the isolate function will be cancelled. |

## 2.2 Engineering Controls

The indicators and controls outside the Fire-Fighter Facility are for the use of the building owner or service and maintenance personnel. These are shown in Figure 2.1: F120A Front Panel.

The three (3) Indicator LEDs are:

| | |
|---|---|
| **Mains** | Normally ON. Turns ON when Mains is applied, and turns OFF when Mains is disconnected. |
| **Brigade Called** | Normally OFF. Turns ON when the 'Fire' relay is activated, indicating that a fire signal has been sent to the brigade-calling device. |
| **Power Supply Fault** | Normally OFF. Turns ON if the battery or charger voltage is too high or too low, if the battery fails its 24-Hour auto test, or if the battery is disconnected. |

The remaining push-buttons have the following functions:

| | |
|---|---|
| **Door Holder** | Used to isolate the Door Holder relay on the Master board and all output modules configured as Door Holder relays. |
| **Isolate ACF** | Used to isolate the ACF relay on the Master board and all output modules configured as ACF or ACFM relays. |
| **Warn System On** | Used to operate all alerting devices on the system to evacuate the building(s).<br>It turns ON the WARN SYS and EXT BELL relays on the Master board; all output modules configured as WRN or WRNM relays and sends the EVACUATE message on the RS485 bus. |
| **F1, F2, F3, F4** | These four keys select the soft-key functions displayed on the bottom line of the LCD display and enter the ***F120A*** Menu. |
| **↑,↓,←,→** | Used for editing functions, and for moving from field to field on the LCD display. |
| **Walk Test** | Used to enter 'Walk Test'. The ***F120A*** switches into a self-resetting, non-latching mode. |
| **Lamp Test** | Used to initiate 'Lamp Test' mode. The LED's on the front of the panel and LED display LEDs (if present) are cycled sequentially, changing approximately every second. The LCD display turns on its display pixels. |
| **Enter** | Used to accept 'edit', 'configuration', and other information for data entry functions. |
| **Menu** | Used to access the menu or exit from a particular menu function by returning to the previous level. |

## 2.3 Alphanumeric LCD Display and Menu Functions

The alphanumeric display has four main display or menu functions:

- Normal Display
- Event Display
- User Menu
- Engineer's Menu.

### 2.3.1 Normal / Date-Time Display

The 'Normal Display' type is displayed when the **F120A** system is Normal. The time and date are also displayed in 24-hour format:

```
Pertronic F120A
Thursday, 06 May 2004 16:49:21
(user text 1)
(user text 2)
```

The values of the "user text" and the format of the time and date can be set via the Engineer's Menu under Engineer/General/Site info (see Section 9.7.4: SiteInfo- Edit Site–Specific Information.

### 2.3.2 Event Display and Event Queues

When an event occurs on the **F120A** system, it is put into one of four event queues:

| | |
|---|---|
| Alarm Queue | (highest priority) |
| Isolate Queue, | |
| Fault Queue | |
| System Events Queue. | (lowest priority) |

An event queue that contains current information is deemed to be 'active'. The active event queue with the highest display priority is shown on the LCD display. If there is no keyboard activity within 30 seconds, and there is more than one item in the queue, the display is scrolled to the next queue event at 6-second intervals.

An event can be an automatic event such as a 'Fire Alarm' or a 'Fault' condition; or may be a user-initiated event such as indicating that 'Walk Test' is in progress, or that 'External Bell Isolated' is active.

The 'Alarm Queue' contains only 'active' and 'acknowledged' alarms. When all the alarms have been 'isolated' or 'reset', the 'Alarm Queue' is reset and becomes inactive.

The 'Isolate Queue' contains details of zones or detectors that are currently isolated.

The 'Fault Queue' contains all panel faults such as 'Double Address', 'Battery Disconnected' or 'External Fault'.

The 'System Events Queue' displays events such as 'Door Holder Isolated' or 'Walk Test'.

Queues with lower priority may be displayed from higher-priority queues by pressing **Enter** on the front panel. The display returns to the active queue with the highest priority after no keyboard activity has taken place within 30 seconds.

When more than one item is in a queue, a message at the top right of the LCD display indicates the position of the displayed message in the queue, and the total number of items in the queue eg. ISO:3/5. When there is more that one event in the queue, this indication alternates with the text '**more...**'.

The items within a queue may be scrolled back and forth by using **PREVIOUS** and **NEXT** in the Fire-Fighter Facility, or the left/right arrow keys at the lower right area of the keyboard.

#### 2.3.2.1 Fire Alarm Display

A typical display for a system 'Fire Alarm' is:

```
**ALARM** (callpoint)              ALM:1/2
Loc:ROOM 203
    West Wing, upper level
Z0012:L04M002(MCP), 11:25:18 11-05-04
```

This display indicates that there is a fire alarm on loop 4, generated from a manual call point having address 2. The manual call point has been configured to zone 12. The location of the device is at 'Room 203' (the device descriptor) in the 'West Wing, upper level' (the zone descriptor). The figures at the top right hand of the display indicate that this is the first alarm message of two events.

#### 2.3.2.2 Device Fault Display

A typical display for a device in 'Fault' is:

```
Missing                            DEF:1/2
Loc:Kitchen
    Perry Mason Block
Z0027:L03D030(ION), 11:25:18 11-05-04
```

This display indicates that an ionisation detector located on loop 3 with address 30 is missing. The detector is located in zone 27 at the 'Kitchen' at the 'Perry Mason Block' building.

#### 2.3.2.3 Device Isolated Display

The display for a device that has been 'Isolated' is:

```
ISOLATE[ALARM]                    ISO:2/12
Loc:Kitchen
    Perry Mason Block
Z0047:L03M051(MCP), 11:25:18 11-05-04
```

This display shows that the manual call point with address 51 on loop 3 has been isolated. It is the second of 12 devices or zones, which have been isolated.

### 2.3.3 User Menu Operations

The User Menu is used for selecting functions such as 'System Reset', or further menus such as the Isolate or Engineer's menu. The User Menu is reached by pressing any function key (**F1**-**F4**), **Menu** or **Enter** (with no events on-screen). The display then shows:

```
                User Menu

 Engineer   Status    History  Isolate →
```

For further information on the User Menu and its functions, refer to Section 7.

### 2.3.4 Engineer's Menu Operations

The Engineer's Menu is used for functions such as modifying detector configurations and entering or changing zone and device descriptors. The Engineer's Menu is selected from the User Menu.

A password is required from the operator before the Engineer's Menu is entered.

The initial display for the Engineer's Menu is:

```
              Engineer's Menu

 Devices    Zones    Groups    LogicBlk→
```

For further information on the Engineer's Menu and its functions, refer to Section 9: Operating the Engineer's Menu.

# 3. SYSTEM STARTUP AND SYSTEM TESTS

## 3.1 System Initialisation

When the **F120A** is powered up or reset, the configuration ROM is checked for data validity. The system checks each data block to ensure that the ROM has been initialised. This procedure must complete before the panel is used, as all system functions are dependent on the state of the data.

For normal operation, this operation is just a check; the data ROM is initialised at the factory. If the configuration ROM chip is replaced in the field, the **F120A** stops and prompts for action when it encounters a blank area of ROM:

```
Checking Configuration ROM...
Initialising loop 1 configuration...
Need to initialise L01D001 config...
Please turn Memory Lock switch OFF...
```

At this point the **F120A** waits indefinitely for the Memory Lock switch to be turned OFF and remains in a Fault state. Once the Memory Lock switch has been turned OFF, the **F120A** initialises the ROM and goes to the normal 'start-up' screen. The **F120A** immediately generates a 'Memory Lock Switch Fault' event, which is cleared by turning the switch ON again.

**Note that during Flash initialisation, all other panel processing stops!**

In normal operation, both the configuration ROM and the code ROM are periodically checked for validity (every hour) using a Cyclic Redundancy Check (CRC). Each configuration area has its own CRC, so data corruption can be pinpointed to a small area of the configuration. In the unlikely event of the configuration ROM becoming corrupt, the **F120A** continues operation using the erroneous data, but flags a Fault highlighting the affected memory area.

### 3.1.1 Initialisation after Firmware Upgrade

When upgrading panel firmware to v4 code, the **F120A** MUST erase the pre-existing configuration from earlier versions, due to the constraints 60 extra detectors per loop make on the configuration memory layout.

If the code detects that the firmware has been upgraded, the buzzer beeps rapidly and the following prompt is displayed:

```
**CONFIGURATION DATA ERASURE REQUIRED**
Press 'ACK' to clear config memory and
 restart, or power off & save old data
     to PC using original code chip
```

The prompt ensures the existing configuration is saved (using the old copy of the code) before upgrading, so that the configuration data can be restored once the Flash erase is complete and the configuration data is re-initialised.

Once **ACK** is pressed, the sequence carries on in a similar manner to the 'Defaults' option from the Engineer's menu (see Section 9.14: Defaults – Reset Configuration to Defaults), but in this case, aborting the process returns to the original message above.

## 3.2 Normal Operation System Tests

When the **F120A** is operating, various tests are continually performed. These tests fall into two categories:

a) general system tests carried out by the **F120A** Master

b) loop tests carried out by the Loop Extender boards.

### 3.2.1 System Tests:

| | |
|---|---|
| Battery Voltage test | every 500ms. |
| Battery Present test | every 10s. |
| Mains Failure detection | every 500ms. |
| Door open detection | every 500ms. |
| 24 hour test | charger low for 1 hour |
| Check for correct number of LCD and LED mimics | on door closure |
| Check monitored bell relays | every 500ms. |
| Check monitored ACF relay | every 500ms. |
| Check earth leakage | every 500ms. |
| CRC check | every hour |

### 3.2.2 Loop Tests:

| | |
|---|---|
| Loop Continuity test | every poll cycle |
| Check for extra (un-configured) loop devices | on door closure (after entering Engineer's Menu) and one unused address per poll cycle. |
| Detector test | every 24 hours (and door closure as above) |
| Check for missing detectors or modules | every poll cycle |
| Check monitored loop relays | every poll cycle |

Note: If the processor does not pass regularly through predefined locations, the watchdog resets the processor, and a fault is signalled appropriately on automatic restart.

# 4. ADDRESSABLE DEVICES

Each of the 2-wire analogue addressable loops accept addressable devices which include smoke detectors, heat detectors, manual call points, monitor modules, loop responders, and loop relay units. A mixture of device types may be used. Section 12: Detectors and Modules lists the addressable devices that may be connected to the **F120A**.

For each loop, the **F120A** uses addresses 1 to 159 for detectors (smoke and heat detectors), and addresses 1 to 99 for modules (manual call points, relays, loop responders, etc).

A maximum of 258 devices may be installed on each loop, (159 detectors plus 99 modules). Each detector or module must have a unique address. No two detectors can have the same address and similarly no two modules can have the same address. For purposes of device labelling, the numbering system shown in Fig 4.1 is recommended.

The **F120A** detects loop Faults by performing a continuity test before each poll sequence. Loop isolators are used between zones to prevent more than one zone being lost in the event of a loop short-circuit.

Figure 4.1: Device Labelling shows how isolators are placed in a multi-zone loops.

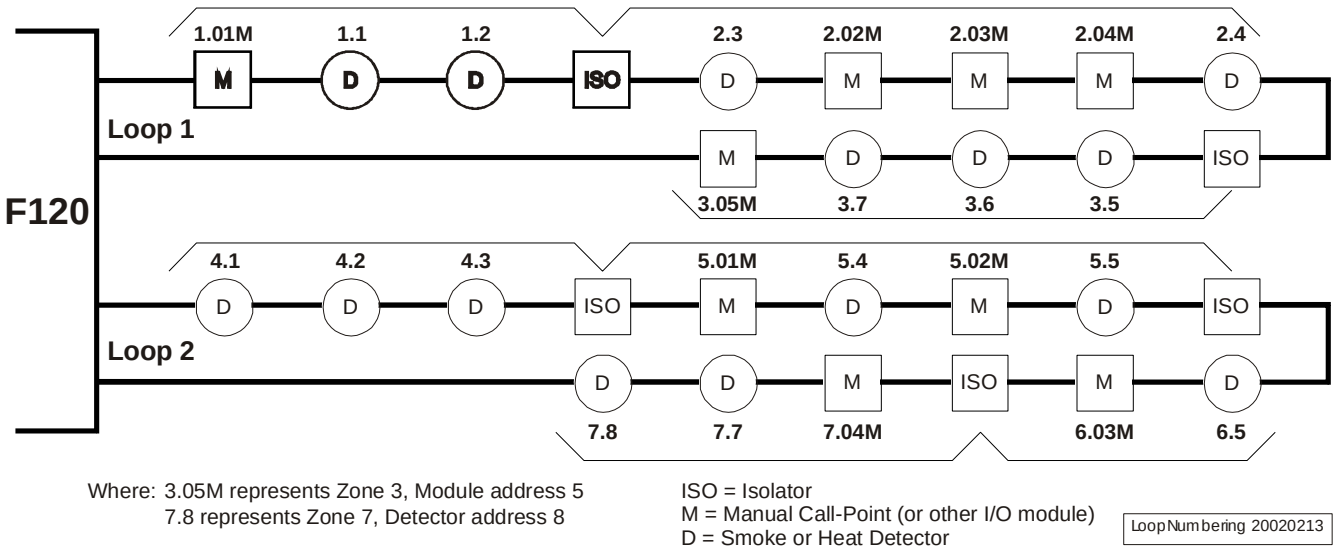


Figure 4.1: Device Labelling

## 4.1 Detectors

The analogue addressable detectors used by the **F120A** and their corresponding Type designators are:

| | |
|---|---|
| System Sensor 1251 Ionisation smoke detector | ION |
| System Sensor 2251 Photoelectric smoke detector | OPT |
| System Sensor 5251/5551R Rate of Rise heat detector | HEAT |
| System Sensor FTX-P1 Filtrex™ Optical Detector | FLTX |
| System Sensor 2251TM Acclimate™ Detector | ACCL |
| System Sensor 2251CTLE COPTIR™ and 2251TLE PTIR™ Detector | ACCL |
| System Sensor 7251 Pinnacle™ Laser Detector | LASR |
| System Sensor 6500S, 6200 or BEAM200 Reflected Beam Detector | BEAM |
| System Sensor 8251 FAAST™ Aspirated Smoke Detector | FAST |

Table 4.1: Detector Type Designators

Two levels of detection are implemented for analogue detectors. When the 'Pre-Alarm' level is reached, a Fault is generated; and when the second level is reached, an 'Alarm' is generated.

Each detector can be configured for a range of sensitivities.

The detectors are polled every 2 to 8 seconds, depending on the number of devices on each loop.

Each of the parameters shown in Table 4.2 may be set, through menu functions, for each detector.

| Parameter | Value | Description |
|---|---|---|
| Sensitivity | -5 to +3 | The number of levels available depends on the device type.<br>The normal sensitivity value is 0. More sensitive levels are positive, less sensitive are negative. |
| Configuration Flags | Warning System<br>External Bell | Setting 'W' or 'E' active causes the monitored WARNING SYSTEM or EXTERNAL BELL relays to activate when the detector is in the alarm condition. |
| | Brigade | When Brigade is set, the 'Fire' relay activates in the alarm state. This affects both the Brigade transmission and the clean contacts. |
| | ACF | Selecting ACF causes the 'ACF' relay to activate when the detector is in the alarm state. If ACF Isolate is active (ACF Isolate), the detector will have no effect on the auxiliary relays. |
| | Door Holder | When set, the Door Holder relay activates when the detector is in the alarm condition. If the door holder relays are isolated (Door Holder Isolate), the detector has no effect on the relay. |
| | Latch | If a detector is set as 'latched', the alarm condition is latched by the **F120A**, otherwise the output follows the state of the detector. |
| | Brigade Latch | Non-latching until the brigade is called, at which point the detector acts as though the Latch is set. |
| | Alarm Queue/ Buzzer | When set, the local buzzer is sounded and an alarm condition occurs. Pressing any front panel key silences the buzzer.<br>If the alarm is reset and subsequently a new alarm occurs, the buzzer sounds again. |
| | Zone Trip<br>(Relays only) | Setting Zone Trip ensures that the relay latches ON once activated, regardless of the state of the triggering device.<br>The relay is unlatched with the Global Fan Reset signal (see Section 6.2.6: Fan Reset for details). |
| AVF | OFF or ON | This option sets the 'Alarm Verification Facility' for a device (all input devices except Heat detectors, MCPs, Isolate and 3-Way switches).<br>If AVF is set and the device goes into the 'Alarm' state within the verification period of the first activation, the **F120A** signals the appropriate 'Alarm' condition for that device.<br>The verification period is 120 seconds. |

Table 4.2: Device Parameters

Detectors may also be assigned the following parameters:

Zone Number — A number 1 to 9999 (or zero (0) for no assignment) which corresponds to a physical zone area in the building. Note that the Network Zone Offset parameter has an effect here (see Section 9.12).

Each zone may also be assigned a 31-character descriptor.

Descriptor — A 31-character descriptor can be assigned to each detector. This descriptor is used when displaying an event associated with the detector on the LCD display.

Both the detector and zone descriptors are normally used on the display. If the device has no descriptor assigned, the zone descriptor only is used, otherwise the "Loc:" field is left blank.

## 4.2 Virtual Detectors

An **F120A** with Loop Driver II hardware may have “virtual” detectors programmed. Each virtual “child” detector has a copy of the current status of the “parent” detector, but is processed as an independent detector with separate alarm level, output mapping, and descriptor. This allows for up to four (4) different levels of panel response based on detector sensitivity.

The **F120A** uses a lower-case ‘v’ to designate virtual detector types. Hence a parent “OPT” detector can have child “vOPT” detectors and a parent “ACCL” can have child “vACCL” detectors, etc. Parent detectors are programmed as usual, but any virtual devices must be programmed at the address immediately following the parent’s address.

An example of virtual detector use might be to use the System Sensor® Pinnacle™ Laser detector to provide escalating response to different levels of smoke, as illustrated below:

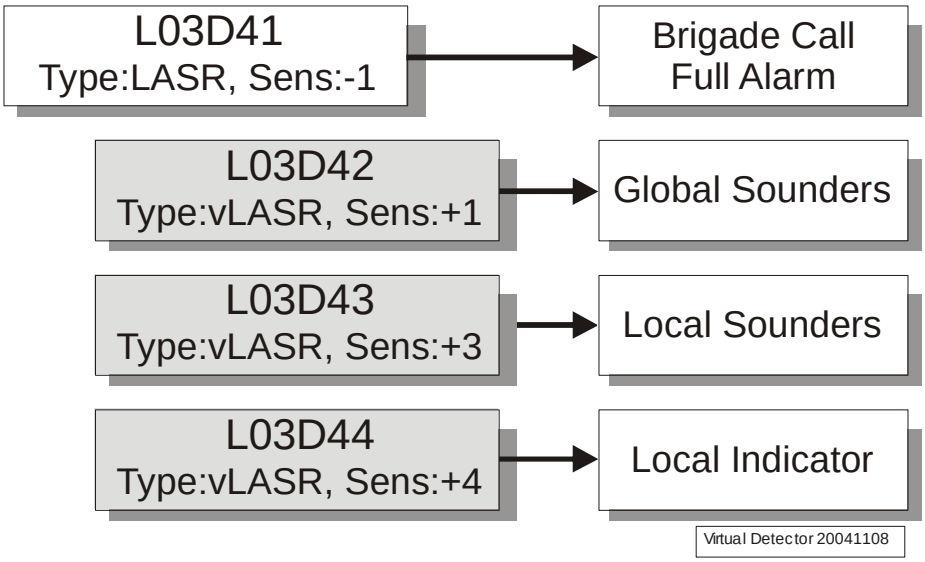


Figure 4.2: Example of Virtual Detector Use

### 4.2.1 Limitations

- Virtual detectors cannot be configured to be Brigade calling; this function must be programmed into the base detector, if required. Consequently it is expected that all virtual devices will be more sensitive than the parent.
- Similarly, there are no Pre-Alarm events generated for virtual detectors.
- There can be at most 3 virtual devices attached to a real detector.
- The only Fault event generated by a virtual detector is for Type Mismatch. This will occur if there is no parent, a different parent type, a real detector at the same address, or if there are more than 3 virtual detectors configured.

## 4.3 Manual Call-Points

The **F120A** uses the System Sensor Addressable Call-Point, product code: M500KAC.

Manual Call-Points are polled (worst case) every 4 seconds. If activation of a call-point is detected, the call-point is polled immediately to re-confirm the ‘Alarm’ state, giving a maximum response for a call-point alarm of 4.1 seconds.

Manual Call-Points give ‘Normal’, ‘Fault’, and ‘Alarm’ states to the **F120A**.

Each call-point can have parameters programmed through the menu system. The parameters are the same as for the detectors, except for ‘sensitivity’ and ‘AVF’ which are not applicable to Manual Call-Points.

Manual Call-Points may also be individually assigned a zone number and descriptor, as for detectors (described in Section 6.2 Output Types).

The selected address (1 to 99) is part of the Module address allocation.

## 4.4 Monitor Modules

The **F120A** uses the following modules for additional inputs to the system:

System Sensor M201-240 Mains Switching Output Module
System Sensor M220E Dual Channel Input Module
System Sensor M221E Dual Channel Input – Single Channel Output Module
System Sensor M500MB Monitor Module
System Sensor M500X Zone Isolator
System Sensor M501MB Monitor Module (Miniature)
System Sensor M502 Conventional Interface Module
System Sensor M503ME Monitor Module (Micro, with LED)
System Sensor M512ME Conventional Interface Module

A variety of Type designators, with corresponding functions, are allowable for input modules. These are programmed and controlled in a manner similar to Manual Call-Points and are assigned parameters and descriptors in the same way. Monitor modules may be programmed for unlatched operation.

The input device Type designators and a description of their function are listed in Table 4.3.

| Type Designator | Function and Operation | |
|---|---|---|
| MCP | Manual Call-Point | Always latches, Brigade Latch and AVF disabled. |
| SPR | Sprinkler | As for MCP operation, except that Unlatching, AVF and Brigade Latch are allowed. |
| FSW | Flow Switch | |
| PSW | Pressure Switch | |
| VMD | Valve Monitor Device | |
| SIP | Sub-Indicator Panel | |
| ISO | Isolate Switch | When active, the zone assigned to the input is isolated, along with all other devices within that zone.<br>When the input is returned to Normal, the zone is de-isolated, and all other devices within the zone are returned to the Normal state. |
| FANC | Fan Controller | |
| M512 | Conventional Zone Monitor Module | A zone of conventional devices may be connected to the M512 module and configured like detectors with Unlatching, Brigade Latch and AVF allowed. Powered from the analogue loop or an external PSU. May be reset from panel. |
| ZMU | Zone Monitor Unit | Used only by M502 modules. A zone of conventional devices may be connected to the M502 module. An external PSU is required. To reset latching devices, the PSU supply to the M502 must be broken with a relay. This relay may be triggered from the “Device Reset” system event output. |
| BMIF | Conventional Beam Detector via interface | For a beam detector, an external reset is required to unlatch the device, so the “Device Reset” event will also be triggered for a BMIF device as for ZMU. |
| SW | Switch input | As for MCP operation, except that Unlatching is allowed. |
| VES | VESDA input | |
| SW_H | Hidden Switch input | The SW_H device type is for controls that do not require display or event logging, latching is not allowed. |
| LPRS | Loop Responder | 8 zones of conventional devices may be connected and configured as for detectors with Unlatching, Brigade Latch and AVF allowed. |
| SW3 | 3-Position Switch | Used to handle commonly used switches (e.g. fan, damper controls) that use an OFF/AUTO/ON layout. Uses a standard loop input module, but treats Short as “OFF” and Open as “ON”.<br>The normal condition (47kΩ EOL) is the “Auto” position. |

Table 4.3: Input Device Type Designators and Description

Some modules provide a two- or four-wire monitored input circuit. A 47kΩ EOL (end of line) resistor is required for the two-wire configuration. (Refer to the Installation and Maintenance Instructions for the M500 series modules, System Sensor document M500-05-00).

The selected address (1 to 99) is part of the Module address allocation.

For conventional device operation, the Pertronic Loop Responder (refer to Section 4.5) may be a better choice than the M502 module. The M502 requires an external supply, and resetting the detectors or modules is more difficult.

## 4.5 Loop Responder

An 8-circuit Loop Responder is available for use on the **F120A** using the analogue addressable loop:

Pertronic AA8LR 8-Circuit Loop Responder (8 conventional detector circuits, 1 relay output).

The Type designator assigned for Loop Responders is LPRS.

As for detectors, the parameters and descriptors are assigned for each conventional circuit through the menu system.

**Note**: The Pertronic AA8LR Loop Responder uses 9 address spaces. The addresses are allocated in sequence with the lowest address being set by the rotary switches on the responder.

For example, for responder switches set to address 41, the responder occupies addresses 41 to 49 inclusive. The first 8 addresses are allocated to the circuits (1 to 8 respectively), the 9th address space is the output relay. In the example, this is address 49. The selected addresses (1 to 99) share the Module address allocation.

## 4.6 Loop Input Device Parameter Default Settings

The default settings for the Loop Input devices are:

| Parameter | Default State | Notes |
|---|---|---|
| Sensitivity | Normal (0) | Applies to detectors only |
| Bell 1, Bell 2 | set | All loop input devices |
| Brigade | set | All loop input devices |
| ACF | set | All loop input devices |
| Door Holder | set | All loop input devices |
| Latched/Unlatched | Latched | All loop input devices |
| Brigade Latch | clear | All loop input devices |
| AVF | OFF | Applies to all input devices except Heat detectors, MCPs, Isolate and 3-Way switches. |

Table 4.4: Default Device Settings

## 4.7 Loop Relays

The **F120A** uses addressable System Sensor M500C or M500CH Control Modules and the addressable Pertronic AA8LR Loop Responder and F100LRU Loop Relay Unit for relay operation. The selected address (1 to 99) is part of the Module address allocation.

The M500CH control module relay output can be configured for clean or monitored relay contacts. This configuration is done physically at the M500CH module. When monitored contacts are required, a 47kΩ EOL (end of line) resistor is required and an external power supply can be used to power the load if necessary. (Refer to the Installation and Maintenance Instructions for the M500 series modules, System Sensor document M500-05-00).

The Pertronic AA8LR Loop Responder relay uses the 9th address from the base input circuit address of the responder. This relay has a clean single changeover contact. For further information, refer to the Loop Responder Technical Manual.

The Pertronic F100LRU Loop Relay Unit has 4 pairs of relay contacts available. Each relay pair has one monitored contact and one non-monitored (clean) contact. The Loop Relay (PCB version 2.00 onwards) uses 4 or 8 addresses, starting from the base address selected on the unit. Four addresses are used in ‘non-pulsing mode’, and 8 addresses when ‘pulsing mode’ is selected. When ‘pulsing mode’ is selected, the first two addresses correspond to Relay1, the next two addresses to Relay2, and so on. When the first of each of the two relay addresses is activated, the relay will pulse; when the second address is activated, the relay will remain ON continuously. For further information, refer to the Relay Responder (PCB version 2) Technical Manual.

All relays can be allocated a zone number (1 to 9999), which corresponds to the physical zoning of the loop devices. The zone number is used by the **F120A** when reporting a Fault state from a relay control module.

Note that the System Sensor Relay/Detector base B224RB (obsolete) contains a relay. This is not controlled from the **F120A** as loop relays are, but instead, is operated when the detector using the base is in ‘Alarm’ condition.

Loop Relays can be configured through the menu system to be one of four types (Table 4.5).

For further information on mapping of Groups and LED number mapping to relays, refer to Section 6: Mapping.

| Type | Description | Operated by | Isolated or Disabled by |
|---|---|---|---|
| ACF<br>ACFM | ACF Relay type monitored and non-monitored | Output mapping* | Isolating the zone in which the relay is assigned, or by isolating the device address.<br>Operating the panel **ACF Isolate** push button |
| DHR | Door Holder type not monitored | Output mapping* | Isolating the zone in which the relay is assigned, or by isolating the device address.<br>Operating the panel **Door Holder Isolate** push button. |
| WRN<br>WRNM | Sounder Relay type monitored | Output mapping*<br>Panel MCP input<br>The panel 'Warn System On' push-button or from a mimic connected to the panel RS485 port | Isolating the zone in which the relay is assigned, or by isolating the device address.<br>Operating the panel **WARN SYS ISOLATE** push button. |
| RLY<br>RLYM | Relay Output type monitored and non-monitored | Output mapping* | Isolating the zone in which the relay is assigned, or by isolating the device address. |

Table 4.5: Output Device Types

## 4.8 Fan Controller

The Pertronic Fan Controller is used to control clean air and smoke exhaust systems within buildings. The **F120A** treats modules with fan control types uniquely by passing 'Fan State', 'Fan Fault' and 'Fan Control' signals directly between the fan control modules.

Two types are used for these control functions:

| Type | Description | Purpose |
|---|---|---|
| FANC | Fan Control Unit<br>Normally mounted in the main panel below the keyboard/display unit. | Detectors associated with the smoke detection/fan control system are mapped to this unit.<br>Timing and other functions are controlled by the Fan Control Unit. |
| FANR | Fan Relay Unit<br>Normally situated near the building services interface equipment. | Commands the associated fan to RUN or STOP.<br>Detects when the fan is running, and reports the status of the fan system to the Fan Control Unit. |

Table 4.6: Fan Controller Device Types

For further information, refer to the Fan Controller User Manual.

**Note**: The Fan Control Block (FCB) feature (refer to Section 6.10: Fan Control Blocks) can be used to provide flexible fan control functions using generic loop hardware, logical and timer features as required.

FCB operation is NOT related to use of the hardware-based FANC/FANR modules.

## 4.9 Isolation Between Zones

The System Sensor M500X Isolator Module or System Sensor B524IEFT-1 Isolator is used to electrically isolate zones on the **F120A** loop. The device detects short-circuits in an adjacent zone, and isolates the faulty zone by disconnecting the loop (opening relay contacts) to that zone.

Loop Responders and Loop Relay Boards also provide zone isolation. Each of the adjacent loop connections to the boards is monitored for short-circuits and, in the event of a 'Fault', the faulty zone is disconnected.

A maximum of 25 loop devices is permitted between Isolators.

Isolators are not required adjacent to the **F120A** as this is provided on the **F120A** Master board.

A typical loop configuration, showing zone or group fault isolator modules is:

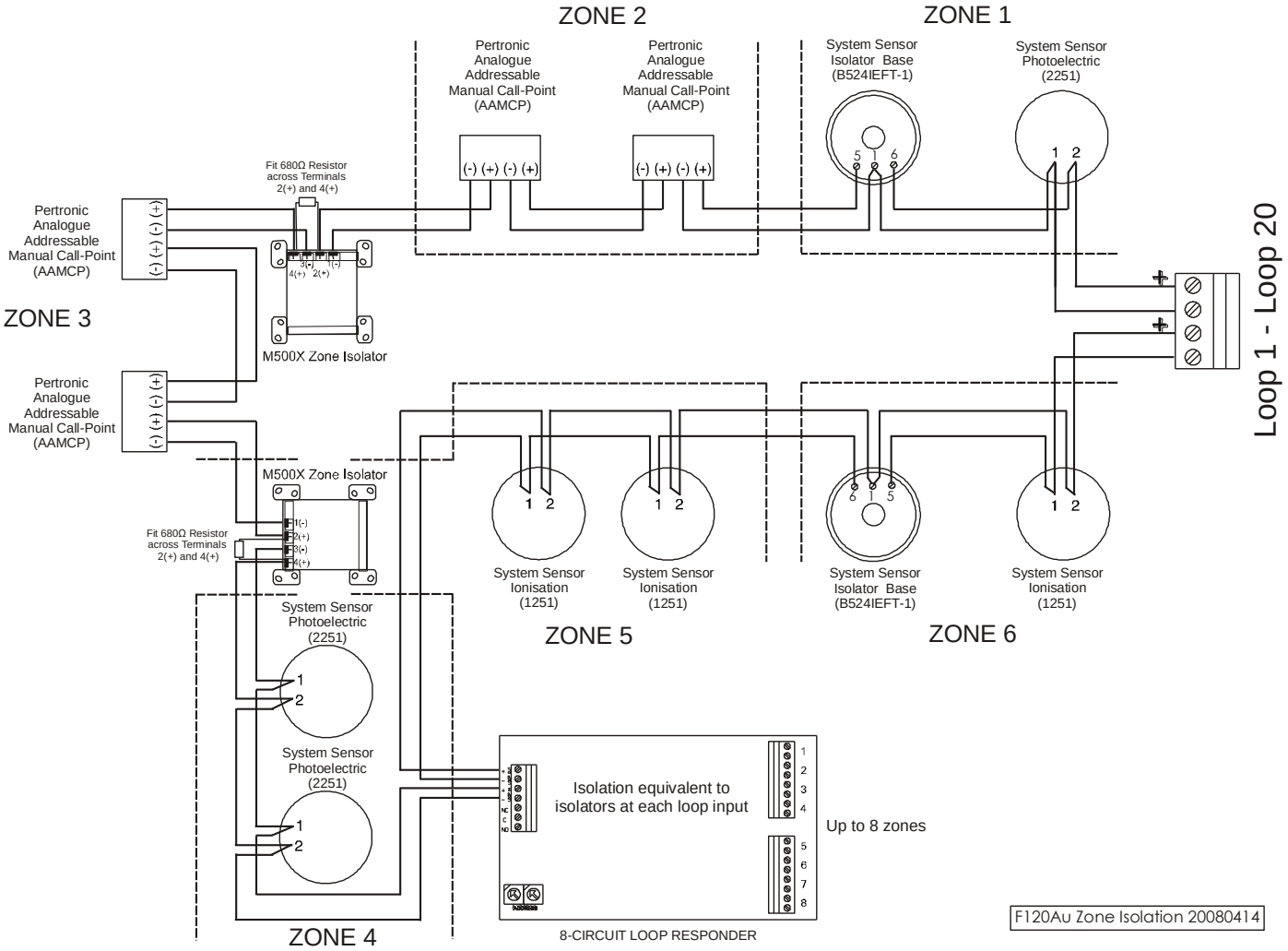


Figure 4.3: Isolation Between Zones

# 5. RS485 BUS

Up to 32 devices may be connected to the **F120A** through the **External RS485** connector (K24).

RS485 devices may be any of LCD and/or LED devices.

- LCD devices may be Full-Function LCD panels or LCD Mini-Mimic panels.
- LED devices may be LED Index Panels, 50W Amplifiers or any of the LED-Addressable interface units.

Each RS485 device may be configured as a 'Slave', 'Polled Slave' or 'Master' mimic.

- Master mimics each have a different address (1 to 8), and must be sequentially numbered beginning at address 1. The number of Master mimics (either LED or LCD) is selected from the Engineer's Menu as described in Section 9.5: Mimics - Configure LED and LCD Mimics. Full-Function master LCD Mimics have full keyboard control of the **F120A**.
- Polled slaves are detected by the **F120A,** but the panel only verifies that the mimic has replied; no mimic events are processed, except 'Buzzer Silence' which acts across the RS485 bus. This setting is useful where there are many mimics wired in a "star" configuration so that the panel can verify the integrity of the cable out to the "point" of the star.
    - Only LCD Mimic addresses 9 to 29 are treated as polled slaves.
- Slave mimics are receive-only and simply act as remote displays. Slave mimics cannot generate events on the **F120A**, as the panel is unaware of their existence.

The **F120A** checks the number of Master and Polled Slave mimic panels connected and transmits a 'Fault' if either too many or too few are found. The addresses for mimics greater than the number specified in the configuration are checked each time the door is closed or when the mimic counts are adjusted.

Full-Function Master mimics can initiate the **Silence Alarms** or **Trial Evac** functions available at the Main panel, as well as all other panel functions available on the local LCD display.

Two LEDs, **Tx** and **Rx** (at the top-left of the Master PCB) flash when data is transmitted to, or received from the mimics.

The mimics may be located up to 1km away from the **F120A**. Twisted pair wiring is recommended for the data lines.

The following devices may be connected to the RS485 bus:

| RS485 Device | Master | Polled Slave | Slave |
|---|---|---|---|
| LCD Full-Function Mimic | Yes (1 – 8) | No | No |
| LCD Mini-Mimic: Hardware ≥ v1.35, Firmware ≥ v2.24 | Yes (1 – 8) | Yes (9 – 29) | Yes (0, 30 - 32) |
| LCD Mini-Mimic: Hardware < v1.35, Firmware < v2.24 | Yes (1 – 8) | Yes (9 – 19) | Yes (0, 20 – 32) |
| LED Mimic: 12-Way Smart LED board | Yes (1 – 8) | No | No |
| EVAC50W24V Amplifier | Yes (1 – 8) | No | No |
| LED Address Controller: | Yes (1 – 8) | No | No |
| **RS485 Sub-Units:** connect to 12-Way Smart LED board or LED Address Controller | | | |
| 8-Way LED Extender board | | | |
| 8-Way LED Relay board | | | |
| LED Zone Address Offset board | | | |
| 48-Way Open-Collector board | | | |

Table 5.1: RS485 Devices

The total number of Master units is limited to 8 LCD Mimics plus 8 LED Mimics, 16 in all.

# 6. MAPPING

The **F120A** supports a flexible mapping system:
Loop input devices may be mapped to one set of 4 output registers; and selected system events (see Section 6.4: System Events). Each output register may be configured to have one of the following output types:

| Type | Description |
|---|---|
| Loop Device | This may be:<br>• A detector – simply turns on the detector LED for sounder base type applications.<br>• A relay type loop device<br>• FANC, which controls the FANC/FANR pair corresponding to the Fan Controller<br>• FANR, which acts as the Duct Probe output |
| Group | An output Group in the range 1 to 200.<br>Groups simply extend the output function to a further 15 outputs. |
| Display LED | A display LED in the range 1 to 2048 |
| Auxiliary Output | Open-collector output located on the **F120A** Master PCB. |
| General-Purpose Relay | Controls the “GP Relay” on the **F120A** Master PCB. |
| Fan Reset | Resets any latched Fan Control Blocks or relays with the Zone Trip (see Table 4.6: Fan Controller Device Types) attribute set. |
| Non-Brigade Reset | Resets any Non-Brigade devices belonging to the selected zone (1 to 9999), or all zones (zero). |
| Isolate Zone | Isolates the selected zone |
| Activate Night Mode | Places the panel into Night mode |
| Warn Sys On | Replicates the action of the WARN SYS ON button on the front panel, activating the WARNING SYSTEM and EXT BELLS relays, plus all loop Warning System devices, generating a standard ‘Evacuate’ sequence. |
| Activate Warning Systems | Similar to Warn Sys On, except that the External Bell relay and local Buzzer are not activated. This output is intended as a shortcut to the method used in past versions of mapping to each of the sounder relays via Zone or Group mapping. |
| Mute Warning Systems | Temporarily silences all Warning System devices. The ‘Mute’ function is cancelled by any new ‘Alarm’ event or any action of ‘Warn Sys On’ / Ext Bell Isolate / Warn Sys Isolate functions. Input(s) activating the ‘Mute’ output must return to Normal before ‘mute’ can re-activate. |
| Warning System Isolate (Button) | Isolates Warning System devices in the same manner as using the ‘Warning System Isolate’ button in the Fire-Fighter Facility. This output over-rides the Warn Sys On command, as do the local Warn Sys Iso buttons. Local buttons override the mapped function - this allows local control to be taken if, for example, the panel has been silenced from a remote location. If local control is taken, the input(s) driving the WSI-B output must be returned to normal before it will take effect again. |
| Warning System Isolate (Key-Switch) | Silences all Warning System devices on the system - this acts as if the ’BCO’ input on the Master board has been activated. |

Table 6.1: Output Types

The loop input device may also be mapped to a zone. Each zone is mapped to another 8 output registers that may also be defined as one of the four output types.

Typical mapping structures are:

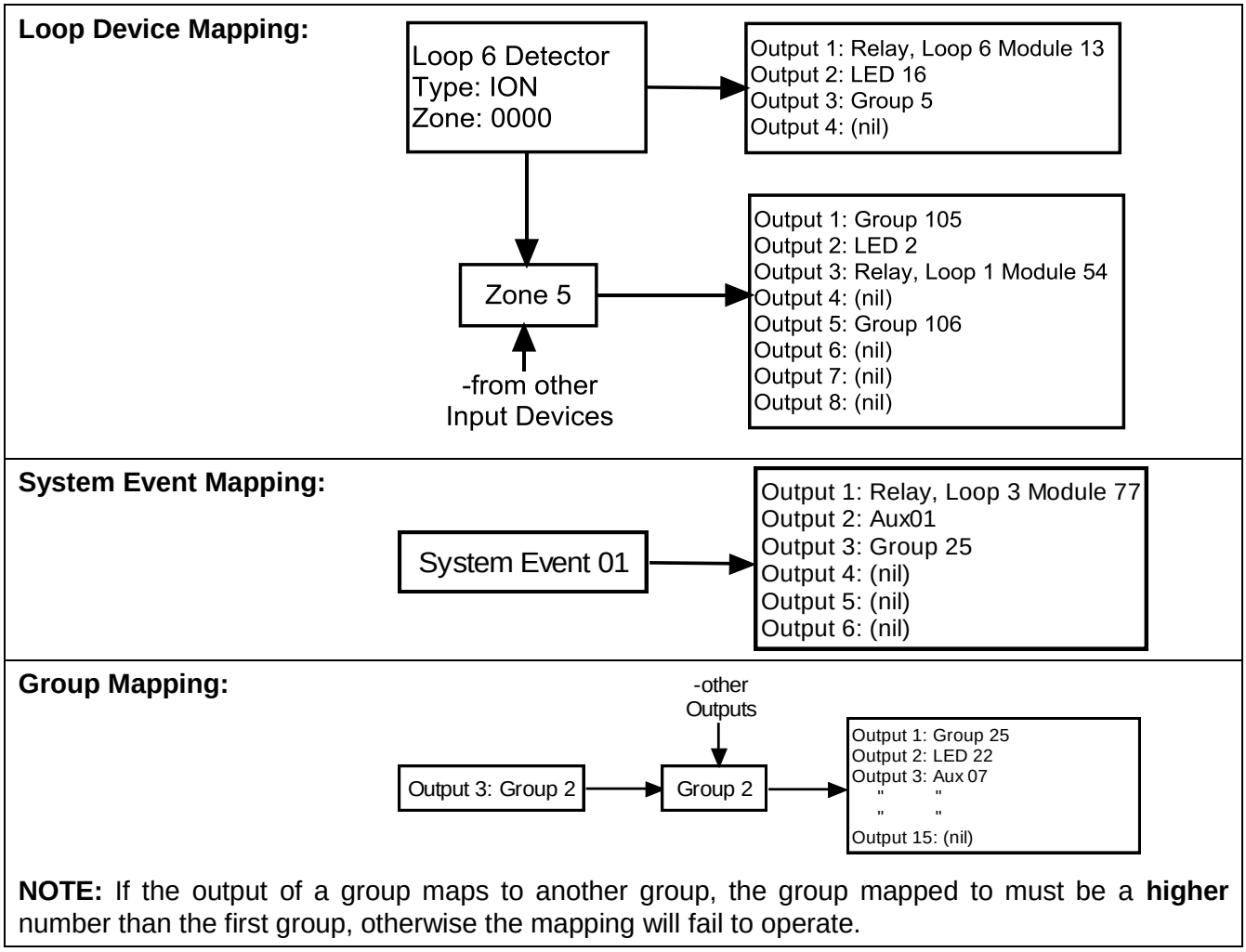


Figure 6.1: Mapping Structures

Outputs are activated when the specified event is active or, for loop devices only, the device is in the selected state (see Section 6.1 below). The ultimate state of an output depends on the collective state of all the activating inputs. For the **F120A**, the inputs are logically OR'ed together, hence any active input, zone or group mapping to a particular output will ensure the output remains active. Similarly, all inputs that directly or indirectly map to a given output must be inactive (Normal) for the output to be switched OFF. The exception to this occurs when a relay output is disabled (depending on the type) using one of the isolating functions at the panel (Silence Alarms, Door Holder Isolate or ACF Isolate).

## 6.1 Loop Device Output Qualification

Loop devices have an extra qualification applied to their outputs, whereby the device must be in the selected state for the output to activate. The options available are:

| Qualification | Description |
|---|---|
| None/Alarm | The default: activate on alarm events. This is independent of whether the device is configured to generate an alarm queue priority event or not. |
| Defect | The device is in a Defect state |
| PreAlarm | Detectors: Active if the detector is currently in PreAlarm state.<br>ISO modules: Activate when there are any active devices within the configured zone.<br>SW_H modules: Activate if the device has been activated by another output. |
| ManualON | An SW3 device is in the ON state. |
| ManualOFF | An SW3 device is in the OFF state. |

## 6.2 Output Types

### 6.2.1 Loop Device Output type:

When the **Loop Device** type is selected, zone, loop input device, or group maps to a loop relay or detector (in the case of a detector, just the detector's LED will illuminate). The device is selected in the standard "LxxMyyy" or "LxxDyyy" format where "xx" represents the loop number (1 to 20) and "yyy" represents the device address (1 to 159).

For Fan Control hardware devices (FANC/FANR pairs), the Fire activation for the pair is achieved by mapping to the FANC device. If Duct Probe override is provided, the duct probe device(s) should map to the FANR device.

### 6.2.2 Group Output type:

When the **Group** device is selected, the input device maps to one of 200 Groups. Each group can take 1 to 15 further outputs. A group may map to another group, but the group mapped to must be a higher number than the first group. This may be desirable either to simply extend the number of outputs available to a loop device or zone, or to collect similar panel functions into different groups.

### 6.2.3 LED Output type:

When the **LED** device is selected, the zone, loop input device, or group maps to a display LED (whether physically present or not). When the input device is in the 'Alarm' state, the appropriate LED is activated. The allowable LED range for the **F120A** system is 0001 to 2048.

### 6.2.4 Aux Output type:

When **Aux** is selected, the zone, loop input device, or group maps to one of 8 auxiliary outputs (only 7 auxiliary outputs are available on early PCBs, version 2.0x).

### 6.2.5 General-Purpose Relay

When **G.P. Relay** is selected, the output maps to the General-Purpose Relay on the Master board (PCB versions v2.0 and greater). This relay provides 2 sets of clean contacts rated 1.25A @ 24Vdc.

### 6.2.6 Fan Reset

When **FanRst** is selected, a reset signal is sent to each active Fan Control Block in the system – refer to Section 6.10: Fan Control Blocks for a description of Fan Control Block operation. This signal also resets any latched relays with the Zone Trip attribute set.

### 6.2.7 Non-Brigade Reset

When **N.B. Reset-ZoneNNNN** is selected, a reset command is sent to all Non-Brigade devices belonging to the specified zone (or in any zone if zero). This function is particularly useful for resetting non-brigade-calling smoke detectors in conjunction with the Zonal Timer function – refer to Section 6.7: Zonal Timers.

**Note:** To facilitate the fire brigade's ability to track alarms once they arrive on-site, the non-brigade reset function is disabled once the brigade (Fire) relay has activated.

### 6.2.8 Isolate Zone

When **Zone Isolate NNNN** is selected, the selected zone is isolated.

### 6.2.9 Activate Night Mode

With **Day/Night** mode active, all detectors can have a second Sensitivity value set to be used when the panel enters Night Mode. When **Night Mode** is selected, the panel secondary Night sensitivities for all detectors are utilised instead of the standard (Day) Sensitivity level. This feature allows the **F120A** to operate with enhanced smoke or heat sensitivity when the building occupation changes during a 24-hour period. Night Mode output is typically generated using a timed logic function or an input driven by an external timer or security system.

The **Night Mode** output has no effect unless Day/Night mode is enabled (see Section 9.7.1 System Flags).

### 6.2.10 Warn Sys On

Replicates the action of the WARN SYS ON button on the front panel, activating the WARNING SYSTEM and EXT BELLS relays, plus all loop Warning System devices, generating a standard 'Evacuate' sequence.

### 6.2.11 Activate Warning Systems

Equivalent to mapping to all Warning System loop devices, plus the WARNING SYSTEM (not EXT BELLS) relay. The other differences between this and the "Warn Sys On" output are that the 'Evacuate' flag is not broadcast to external amplifiers and it will not activate the internal buzzer.

### 6.2.12 Mute Warning Systems

Temporarily silences all Warning System devices. The 'Mute' function is cancelled by any new 'Alarm' event or any action of 'Warn Sys On' / Ext Bell Isolate / Warn Sys Isolate functions. Input(s) activating the 'Mute' output must return to Normal before 'mute' can re-activate.

### 6.2.13 Warning System Isolate (Button)

Isolates Warning System devices in the same manner as using the 'Warning System Isolate' button in the Fire-Fighter Facility. This output over-rides the Warn Sys On command, as do the local Warn Sys Iso buttons. Local buttons override the mapped function - this allows local control to be taken if, for example, the panel has been silenced from a remote location. If local control is taken, the input(s) driving the WSI-B output must be returned to normal before it will take effect again.

### 6.2.14 Warning System Isolate (Key-Switch)

Silences all Warning System devices on the system - this acts as if the 'BCO' input on the Master board has been activated.

### 6.2.15 Sounder S1 Switch

Changes the behaviour of some loop warning system device types to choose different Stage 1 tones by [logically] (de)activating the LED output when activating the relay. The output negates the effect of the global "Warning System Stage 1" flag described in Section 9.7.1.

## 6.3 Input Types

Inputs are used by some panel functions (Logic Blocks, Timers & Fan Control Blocks) to provide a logical **True** or **False** value to act upon. There are various types of input, as described below:

| Name | Parameters | Description |
|---|---|---|
| Device | StartAddress, EndAddress, Event, Threshold | Looks at the state of one or more devices on the same loop.<br>Event can be any of:<br>• Alarm/Active: Any device in 'Alarm' or relay active<br>• Call-Point, Smoke, Heat: Call-Points/Smoke/Heat Only in 'Alarm'<br>• Pre-Alarm: detectors in 'Pre-Alarm' state<br>• Isolate: isolated devices<br>• Fault: device currently in 'Fault'<br>• Missing: device not responding<br>• Dirty: detector reached Maintenance Alarm threshold<br>• Test: device is being tested via the Test menu (not from 24Hr Test)<br>• ManOFF: a SW3 device is in the OFF position<br>• ManON: a SW3 device is in the ON position<br>Threshold determines the number of devices that must be active for the input to be considered True. Threshold can be set from 1 (OR function) up to 5. A value of zero is treated as all devices within the range (AND function). |
| Group | GroupNumber | True if the specified group has been activated |
| Zone | ZoneNumber, Event | True if the specified zone activity matches Event (Alarm, Fault or Isolate). |
| Logic | BlockNumber, Span, Threshold | True if the specified logic block is true.<br>Span determines the range of block numbers to examine, so that the range is BlockNumber..(BlockNumber+Span).<br>Threshold determines the number of blocks that must be active for the input to be considered True. Threshold can be set from 1 (OR function) up to 5. A value of zero is treated as all blocks within the range (AND function). |
| LED | LEDNumber, Span, Threshold | True if the specified LED has been activated.<br>Span determines the range of LED numbers to examine, so that the range is LEDNumber..(LEDNumber+Span).<br>Threshold determines the number of LEDs that must be active for the input to be considered True. Threshold can be set from 1 (OR function) up to 5. A value of zero is treated as all LEDs within the range (AND function). |
| AuxOut | AuxNumber | True if the specified user auxiliary output has been activated. |

| Name | Parameters | Description |
|---|---|---|
| System Event | SysEventCode | True if the specified system event is active. |
| Time-of-Day | StartTime, Duration, WeekdayMask | True if the weekday is in WeekdayMask (MTWTFSS) and if the current time falls in the range of StartTime to (StartTime+Duration). Duration can be up to 12 hours (12:00:00) and StartTime can be up to 23:59:59. Times wrap to the next day if the sum exceeds 24 hours, so a StartTime of 21:00:00 & Duration of 10:00:00 is valid from 9pm to 7am. |
| Date | StartDate, FinishDate, WeekdayMask | True if the current date falls within the range StartDate to FinishDate and the weekday is in WeekdayMask. StartDate can be higher than FinishDate if the input should be true over the 31-Dec to 01-Jan period. |
| Timer | TmrNumber, State | True if the selected timer TmrNumber is in the selected state. The State values can be one of OFF, Running, Complete or Isolated. |
| Network | NetInputNumber | True if the selected Network Input has been activated |

Table 6.2: Input Type Descriptions

## 6.4 System Events

The System Events configuration block consists of 32 'slots', each containing six output registers. Each slot may be programmed with a System Event code, which determines whether the outputs activate. If more than six outputs are required for a particular event, then depending on requirements, further slots may be used as an alternative to using Groups.

The System Event types available are:

| Type | Description |
|---|---|
| Fire | Global Fire condition set. |
| Fault | Global Fault condition set. |
| Pre-Alarm | At least one detector is in pre-alarm state. |
| Common Isolate | At least one device or zone is isolated. |
| Local MCP | MCP input on Master board active. |
| Warn System On | **WARN SYSTEM ON** active. |
| Ext Bell Isolate | **EXT BELL ISOLATE** active. |
| Warn Sys Isolate | **WARN SYS ISOLATE** active. |
| Mains Failure | Mains supply absent. Note that this is the actual state of the Mains supply -it does not cause a Fault condition immediately. |
| Lamp Test | Activated when the **F120A** is in Lamp Test mode. Provided for lamp test of external equipment.<br>Note: LED outputs are overridden by Lamp Test and will therefore not operate, although they will be treated normally if used as a logical input. |
| Device Reset | Active for 40 seconds after system reset or power-up, or 5 seconds after a device (ZMU or BMIF types only) is reset via the Fire-Fighter Facility (see Section 9: Operating the Engineer's Menu). Intended for use with devices, which require a power-down to unlatch an 'Alarm' condition. |
| Alarm Acknowledge | Active for 5 seconds after any 'Alarm' condition is acknowledged. |
| External Fault | Active when the **EXT DEF** input on the main PCB is open-circuit. |
| Door Open | Active when any LCD Mimic or the main panel door is open. |
| Buzzer On | Active when the **F120A** buzzer is activated. |
| MCP Alarm | Active when any MCP device is in 'Alarm'. |
| Smoke Alarm | Active when any smoke detector is in 'Alarm'. |
| Thermal Alarm | Active when any heat detector is in 'Alarm'. |
| FanCtrl Latched | Active when any latched Fan Control Block, or Relay with the ZoneTrip flag set, is active and therefore must be reset via the global FanReset output. |
| FanCtrl Reset | Active for at least 5 seconds (or when all FCB's have been processed) after the global FanReset output is activated. |
| FanCtrl Frozen | Active once the FCB Freeze Time period has expired (see Section 6.10.9). |
| ACF Isolate | **ACF Isolate** control is active. |
| DHR Isolate | **DHR Isolate** control is active. |
| Night Mode | Active when panel is in Night mode |
| Warning System Isolate – Key-Switch | Generates a 'Warning System Isolate' similar to operating the BCO switch input. |
| Warning System Isolate - Button | Generates a 'Warning System Isolate' similar to operating the button on the Fire-Fighter Facility. |
| NBR Reset | Set for 5 seconds after the global Non Brigade Reset function has been activated. |
| Brigade | Active whenever the main Brigade Fire relay is active. |

Table 6.3: System Event Types

## 6.5 Boolean Logic Blocks

The **F120A** supports logical operations via up to 300 Logic Blocks. A Logic Block can be considered to be a 'black box' with 8 logical inputs and 4 outputs (plus global system outputs) as shown below.

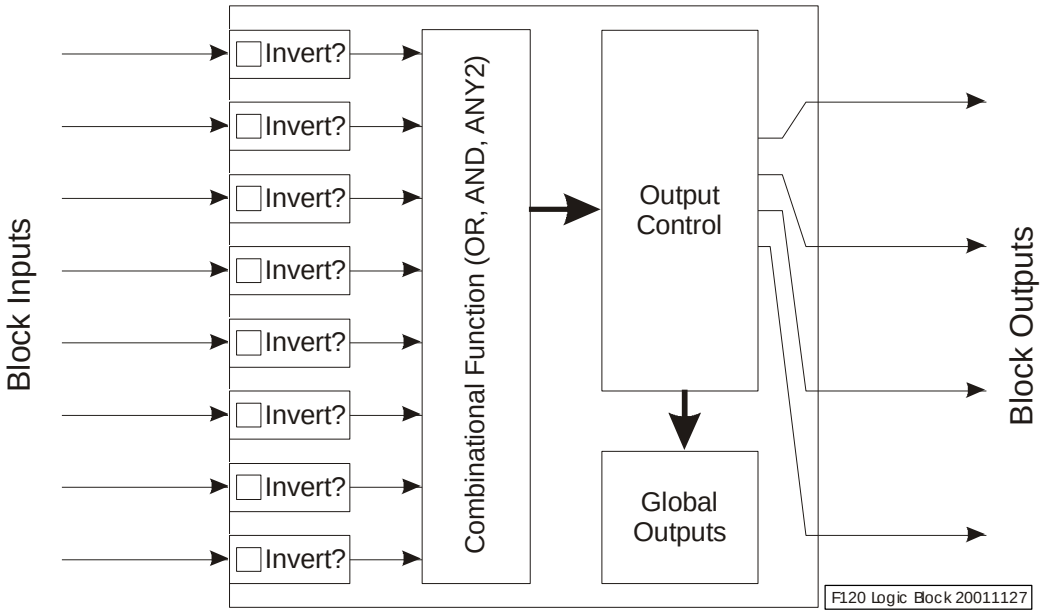


Figure 6.2: Boolean Logic Blocks

The block's logic examines the inputs to decide whether the block is active, and if so, enables the outputs. This feature allows many more control options to be handled by the panel software rather than external hardware.

### 6.5.1 Logic Block Inputs

The inputs can be any combination of the standard input types as outlined above. Each input can also be logically inverted (for example, the block may test for a group NOT being active).

### 6.5.2 Logic Block Outputs

The outputs are the same as all **F120A** outputs and can map to a loop relay, LED, group, etc.

### 6.5.3 Logic Block Flags

In addition to the outputs, the logic block has a set of flags equivalent to loop devices so that the block can ring the main Bells, call the Brigade, operate Door Holder Relays, etc.

The full list is:

| Flag | Symbol | Description |
|---|---|---|
| Warn Sys, Ext Bell | W, E | Activates selected bell relay. |
| Brigade | B | Calls Brigade. |
| Ancillary | A | Activates **ACF** & **ACFM** relays on main PCB. |
| Door Holder | D | Activates **Door Holder** relay on main PCB. |
| Alarm Queue/ Buzzer | Z | Activates warning buzzer. Forces OnScreen set and event into 'Alarm' queue. |
| Latching | L | Latches logic event until manual reset. Forces OnScreen to be set. |
| OnScreen | S | Forces event to be displayed on LCD (defaults to System Events queue) and forces History to be set. |
| History | H | Log event in historical event buffer. |

Table 6.4: Logic Block Flags

### 6.5.4 Block Description

The block has a descriptor for assigning meaningful text to a logical operation. The block descriptor is shown with on-screen or logged events.

### 6.5.5 Block Input Function

The block has an overall logic function associated, as follows:

| Function | Description |
|---|---|
| OR | Any active input causes the block to become active. |
| AND | All **defined** inputs must be active to cause the block to become active. |
| ANY2 | Any 2 or more active inputs cause the block to become active. |

Table 6.5: Block Input Function

## 6.6 Timers

This feature allows time control options to be handled by the panel software instead of external timer hardware.

The **F120A** Timers consist of two preload registers, four control inputs, four outputs and flags for configuration. A number of different behaviours can be selected using the options provided (refer to Table 6.9: Timer Example).

The **F120A** supports up to 50 Timers.

### 6.6.1 Timer Registers

The Timer preload registers provide the values for the main timing of the Timer.

- the T1 register loads the initial Timer Delay (up to 12 hours), which begins when the Timer is started.
- the T2 register sets the second period of the Timer (also up to 12 hours), which begins when the T1 period is complete.
- T1 must be set to a non-zero value for the Timer to operate.

### 6.6.2 Timer Control Inputs

The Timer has 4 control inputs. Each input is activated by the selected logical input, which is the same as the inputs into the **F120A** Logic Blocks.

| Input Name | Description |
|---|---|
| Start | Starts the Timer.<br>In 'Normal' mode, the Timer will return to Normal when the start input is inactive.<br>In 'One-Shot' mode, the start input must return to Normal (false) before the Timer can be re-triggered. |
| Reset | If the Timer is running and the Start input is still active, the Timer resets to the start of the T1 period, as though it has just been started. If the Start input is inactive, the Timer resets to Normal.<br>**NOTE:** Timers can always be manually reset (if configured to be on-screen) using the front-panel **RESET** key, as for loop devices. |
| Isolate | Isolates the Timer. This overrides all other inputs and forces the Timer OFF. |
| Override | Forces the Timer into its 'complete' state. All outputs specified by the Timer output flags as well as the T2 outputs are activated. |

Table 6.6: Timer Control Inputs

### 6.6.3 Timer Outputs

There are four standard **F120A** outputs associated with each Timer:

- two T1 outputs, which are activated while the T1 period is active
- two T2 outputs which are active during the T2 period or when the Timer completes, depending on the options.

### 6.6.4 Timer Configuration Flags

The Timer has a set of flags equivalent to loop devices so that the Timer can ring the main Bells, call the Brigade, operate Door Holder relays, etc.

| Flag | Symbol | Description |
|---|---|---|
| Warn Sys, Ext Bell | W, E | Activates the selected Bell relay. |
| Brigade | B | Calls Brigade. |
| Ancillary | A | Activates **ACF** & **ACFM** relays on Main PCB. |
| Door Holder | D | Activates Door Holder relay on Main PCB. |
| Alarm Queue/ Buzzer | Z | Activates warning buzzer. Forces OnScreen set and event into 'Alarm' queue. |
| Latching | L | Latches Timer complete at the end of T1 (T2 becomes redundant) until manually reset. Forces OnScreen to be set. |
| OnScreen | S | Forces events to be queued to display (defaults to Information queue) and forces History to be set. |
| History | H | Log events in historical event buffer. |
| OneShot | O | The Start input behaves like a momentary contact input – the Timer runs to completion even if the Start input is deactivated. Similarly, the Start input must be returned to normal before the Timer can be restarted. |
| Continuous | C | The Timer runs continuously (T1 to T2 to T1, …) until reset. This flag can only be set if bit **L** is clear and **T2** is non-zero. |

Table 6.7: Timer Configuration Flags

### 6.6.5 Timer Descriptor

The Timer has a descriptor for assigning meaningful text to a Timer function. This descriptor is shown with all displayed or logged events.

### 6.6.6 Timer Events

The **S** and **H** flags described above control the handling of the main Timer events, but there are other events, which behave differently.

The full list of available Timer Events is:

| Event | Description |
|---|---|
| Normal | Timer is normal or has normalised. |
| Started | Timer has started. Logged in the historical event buffer if **S** bit is not set. |
| Complete | Timer has timed out, or Override input was activated. |
| Isolate | Timer isolated. This event is always displayed regardless of **S** and **H** bits. |
| Reset | Timer was reset. This event is **always** logged to the event buffer only. |
| Over-ridden | Timer over-ride input was activated. Always logged to event buffer. |
| Stopped | Timer was stopped, either by deactivating Start or at the end of T2. Always logged. |
| Running | Same as Started event, but used if **S** bit is set. |
| Alarm | Same as Complete, but logged as an Alarm event (bit **Z** set). |

Table 6.8: Timer Events

### 6.6.7 Timer Event Display

Once started, and if the **S** flag is set, the Timer display will appear as:

```
Timer 01 running [T1 01:22]      SYS:1/2
(Global Smoke Timer)

Logged at 11:13:43, Fri 25-Jan-2004
```

This shows that Timer 1 was started at 11:13:43, is in its T1 period, with 1 minute, 22 seconds to run. The timer description is “Global Smoke Timer”. If the timer has a T2 period defined and the **L** bit is clear, then T2 will be displayed once T1 is complete. If **L** is set, the display will change to:

```
Timer 01 complete
SYS:1/2
(Global Smoke Timer)

Logged at 11:15:05, Fri 25-Jan-2004
```

. . . or in the case where Timer 1 had its **Z** flag set, an alarm would be generated as follows:

```
* Timer 01 ALARM *
ALM:1/1
(Global Smoke Timer)

Logged at 11:15:05, Fri 25-Jan-2004
```

### 6.6.8 Timer Example: Brigade Call After Smoke Delay

The requirement is to call the fire brigade after a constant period of activity (say 5 minutes) for a group of non-brigade-calling smoke detectors (detectors 43 to 58 on loop 5). A warning indication is to be given by a strobe (driven off the General Purpose Relay on the main PCB) while the timer is running. An LED indicator is used to show that the smoke timer has raised the alarm. A push-button switch, attached to loop input module address 5 on loop 1 is used to restart the timer if more time is required for the investigating staff to clear the smoke.

The Timer settings for this could be:

| Parameter | Value | Description |
|---|---|---|
| Start | Any of L05D043..D058 | Timer will start when any of the specified detectors activates (and will reset if smoke clears within the T1 period). |
| Reset | Any of L01M005..M005 | Activating the switch will restart the timer if there are still active detectors. |
| T1 | 5:00 | The timer period. |
| T2 | not set | Not required, as we are not using the Continuous flag. |
| Flags | WEBADZL | Activate all Bells, ACF, Door Holder, call Brigade, sound buzzer & latch at completion. |
| T1Out | GPRelay | Activate General Purpose relay to drive strobe. |
| T2Out | LED 14 | Visual indication that brigade call was due to smoke timer. |

Table 6.9: Timer Example

## 6.7 Zonal Timers

The Zonal Timer function is a powerful feature designed to simplify operation of systems where non-brigade smoke detectors are utilised. In such systems, designated smoke detectors within a zone are configured as non-brigade-connected, so that local staff can investigate the cause of activation before involving the brigade.

The timer starts when any non-brigade device in the zone goes into 'Alarm' and finishes at the end of the selected time period **or** when any other non-brigade device activates (commonly referred to as "double-knock". Upon completion, a "Zone xxxx Timer ALARM" event is generated. Whilst the timer is running, up to two outputs are activated; a second pair of outputs is activated when the timer finishes (the "running" outputs are then turned OFF).

The timer function can be externally controlled as follows:

- Acknowledging the device in 'Alarm' via the Fire-Fighter Facility removes it from the timer processing logic; the timer is reset and a further activation is necessary to restart the timer. This facility can be used as a temporary isolate if the alarm cause is non-threatening, but difficult to clear from the detector within the timer period (for example, steam contamination). After clearing the detector it will revert automatically to 'Normal' if flagged as non-latching.
- Resetting a device via the Fire-Fighter Facility or via a "Non-Brigade Reset" output will reset the timer. If the device is still in the 'Alarm' state after the reset, the timer will restart. This technique can be used to extend the time period if clearing the source of the alarm proves to be too time-consuming.
- If any brigade-connected device within the zone activates, all timer outputs are turned OFF, even if the timer has already finished.

While the timer is operating, a "Zone xxxx Timer started" event is logged to the System Event queue and the initiating alarm's display has a countdown timer appended to it showing the time remaining as follows:

```
**ALARM** (smoke) [T-03:45]      ALM:1/1
Loc: GROUND FLOOR FRONT

Z0004:L04D006(ION), 11:06:54 18-12-00
```

## 6.8 Zonal Alarm Acknowledgement Facility

The **F120A** Alarm Acknowledgement facility (AAF) is a function, which implements the Alarm Acknowledgement Facility (or Alarm Investigation Facility) logic in a readily configurable manner.

### 6.8.1 Input Descriptions

There are 2 inputs into the AAF logic.

- the first input, the AAF timer starts when any **non-brigade** configured device (i.e. not for System queue events) belonging to the zone trips into Alarm. This is automatic and is not configurable.

- the second input is the Acknowledge input. This is a standard **F120A** logical input, so can monitor loop devices, LED states, etc., as required.

### 6.8.2 Output Descriptions

Each AAF block supports 3 outputs:

| Output | Description |
|---|---|
| AckTime | Active during the Acknowledge period. |
| InvTime | Active during the Investigation period - after Acknowledge input has activated. |
| Complete | Active once either Acknowledge or Investigation period has elapsed and Fire input is still active. |

### 6.8.3 Acknowledge and Investigation Periods

Each AAF has two associated period parameters. The Acknowledge period defines the time period the building occupant has to Acknowledge the presence of fire in the building. Once acknowledged, the AAF initiates the Investigation period, which extends the time available to deal with the alarm. The Acknowledge operation can be performed **once** only. The periods can be set to any value between 10 seconds and 10 minutes.

Note that the timer continues to run to completion (with the exception of manual Reset via the front panel) regardless of the state of the alarm. This allows scenarios such as the Acknowledge input resetting the zone in alarm: in this case the alarm temporarily reverts to normal, so the timer should stay running. The decision to move the AAF to the Complete or Alarm state (as opposed to reverting to normal) is made by observing the Alarm state as the countdown timer reaches zero.

### 6.8.4 Zone Reset

If set, this option sends a non-brigade Reset command to the zone when the Acknowledge input is activated. Although the initiating device may be non-latching in this application (and consequently it is not strictly necessary to reset), this option will temporarily turn the device LED's off while the devices reset. This may be a useful indication to the occupant that the panel has registered the Acknowledge input.

### 6.8.5 Activation Flags

This parameter stores the 'standard' F120-style flags, so that the AAF can operate the main evacuate relays, call the brigade, etc. The ExtBell, WarnSys, Brigade and other output flags are only active at the end of the time period.

### 6.8.6 Event Generation

The AAF generates various events during operation that can be viewed in the event log and/or on the LCD display:

| Event | Description |
|---|---|
| Normal | AAF has reverted to normal. |
| Running | AAF has started due to alarm. |
| Running-acked | AAF has been acknowledged and is now in the second-stage Investigation period. |
| Complete | The timer has timed out (non-alarm mode). |
| Alarm | The timer has timed out (alarm mode). |
| Acked | AAF Acknowledged (log-only). |
| Reset | The AAF has been manually reset from the front panel. |

The Zone descriptor (if present) is attached to any AAF events.

### 6.8.7 Front Panel Controls

Some aspects of AAF operation can be affected by using the Fire-Fighter Facility at the panel.

- When the timer is running, it may be manually reset using the standard Reset/Acknowledge sequence. The AAF timer restarts immediately if the 'Alarm' condition is still present at this time.

## 6.9 Network Inputs

The network inputs transfer events across the Pertronic panel network. Logically, the panels map events to LEDs, then the network configuration software assigns LED numbers for a particular panel to a Network Input on a particular network interface card. The **F120A** supports up to 128 network inputs.

### 6.9.1 Network Input Outputs

There are four standard **F120A** outputs associated with each network input.

### 6.9.2 Network Input Configuration Flags

The network has a set of flags equivalent to loop devices so that it can ring the Bells, call the Brigade, operate Door Holder relays, etc. The full list is:

| Flag | Symbol | Description |
|---|---|---|
| Warn Sys, Ext Bell | W, E | Activates the selected Bell relay. |
| Brigade | B | Calls brigade. Forces Latching & Buzzer to be set. |
| Ancillary | A | Activates **ACF** & **ACFM** relays on main PCB. |
| Door Holder | D | Activates Door Holder relay on main PCB. |
| Alarm Queue/ Buzzer | Z | Activates warning buzzer. Forces OnScreen set & event into alarm queue; clears Fault flag. |
| Latching | L | Latches event until manually reset. Forces OnScreen to be set. |
| OnScreen | S | Forces events to be queued to display (defaults to Information queue). Forces History to be set. |
| History | H | Log events in historical event buffer. |
| Fault | F | Makes the activated network input to generate a Fault condition on the panel. Forces Latching clear & OnScreen set. |

Table 6.10: Network Input Configuration Flags

### 6.9.3 Network Input Descriptor

The network input has a descriptor for assigning meaningful text to a network function. This descriptor is shown with all displayed or logged events.

### 6.9.4 Network Input Zone

Network inputs can also be assigned a zone, as for loop devices. Possible values are zero (unassigned), or zone 1 to 9999. The Network Zone Offset parameter (see Section 9.12) affects all displayed zone numbers.

## 6.10 Fan Control Blocks

The Fan Control Block (FCB) is a variation on the general-purpose Logic Block (LB) on the **F120A**. It is intended to support fan control functions conforming to AS/NZS1668.1:1998. It combines elements of both Logic Blocks and Timers for its operation. The **F120A** supports up to 400 FCB's.

Note that the operation of the hardware fan control devices (FANC & FANR, see Section 4.8: Fan Controller) is completely independent of the software-controlled FCB's. The FANC & FANR devices handle the relevant timing & control functions in their on-board firmware. The FANC's hardware reset function is also independent of the global "FanRst" output function.

The basic outline is:

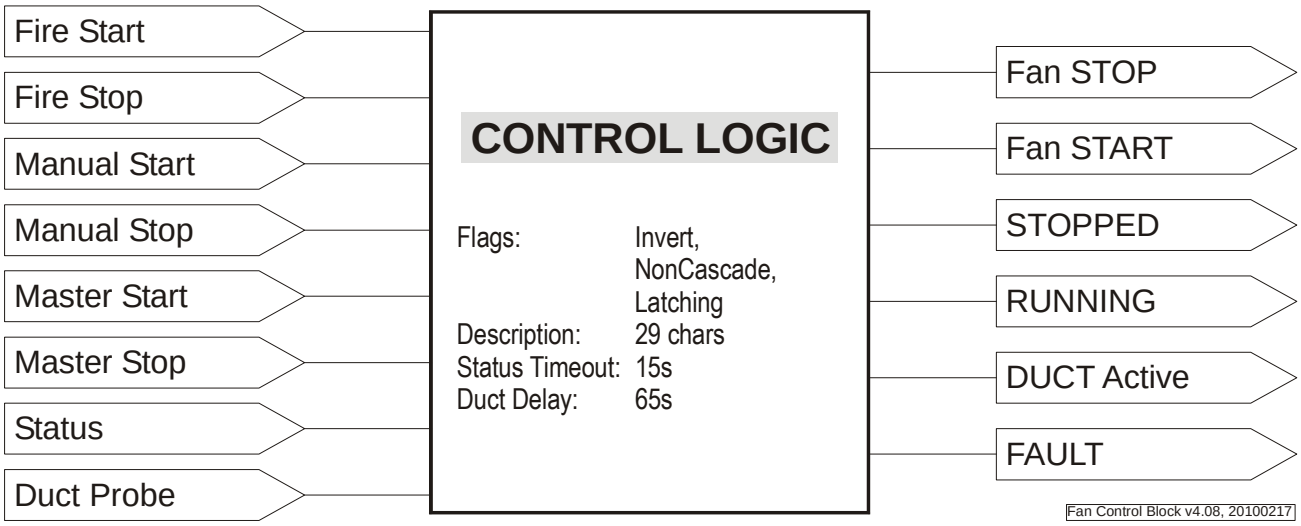


Figure 6.3: Fan Control Blocks

### 6.10.1 FCB Input Descriptions

| Name | Short Name | Description |
|---|---|---|
| Fire Start | FStart | Fire Mode Start input (normally overrides FStop). |
| Fire Stop | FStop | Fire Mode Stop input. |
| Manual Start | MStart | Input for Manual start operation. |
| Manual Stop | MStop | Input for Manual stop operation (overrides Manual Start if both active). |
| Master Start | MstrStart | Input for Master manual Start operation (overrides both Manual inputs). |
| Master Stop | MstrStop | Input for Master manual Stop operation (overrides Master Start and both Manual inputs). |
| Status | ST | Feedback input from air handling system (input active = fan running). |
| Duct Probe | DPIn | Duct Probe input. When activated, initiates fan shutdown.<br>The in-built 65s Duct Probe Timer starts whenever this input goes inactive & maintains the fan shutdown during this period or if the probe re-activates. |

Table 6.11: FCB Input Descriptions

### 6.10.2 FCB Output Descriptions

| Output | Description |
|---|---|
| StartOut | Fan Start output. Activated by MstrStart, MStart or FStart inputs. Can be overridden by MstrStop, MStop, DPIn or FStop, depending on state of operation. |
| StopOut | Fan Stop output. Activated by DPIn, MstrStop, MStop or FStop inputs. Can be overridden by MstrStart, MStart or FStart, depending on state of operation. |
| Stopped | Status of fan feedback input. Active when ST input is inactive. |
| Running | Status of fan feedback input. Active when ST input is active. |
| Flt | Fault status. Active when fan fails to start or stop on command. |
| DPOut | Duct Probe output. Activated only if fan has stopped due to duct probe input (or its related Timer) activation. |

Table 6.12: FCB Output Descriptions

### 6.10.3 FCB Flags

The FCB configuration options are determined by flags.

| Flag Name | Initial | Description |
|---|---|---|
| Invert | I | When set, this flag inverts the normal priority resolution when the FCB sees both FStart & FStop inputs active simultaneously.<br>Normally FStop is ignored if FStart is active. With Invert set, FStart is ignored if FStop is active. |
| Non-Cascade | N | Disables Cascading operation for the FCB.<br>Normally, the FCB sets an internal latch if either FStart or FStop is activated. This latched state is maintained even if the original inputs return to normal. However, an active input can reverse the operation of the FCB if the previous state is only latched.<br>Example: if FStop activates & then resets soon afterwards, the internal FStop state will be latched (with the StopOut output active). If FStart subsequently activates, the FStop latch will clear & the FStart will be activated.<br>Setting NonCascade forces the FCB to latch the first state seen. |
| Latching | L | The (default) Latching mode ensures that the FCB remains in Fire mode once activated by FStart or FStop. The FCB can switch between Start and Stop as described above (if NonCascade is not set), but resetting the original FStart or FStop event will not return the FCB to normal operation. The internal FCB latches are reset when the Fan Reset output is triggered.<br>If Latching is disabled (this is non-compliant with AS1668.1), the FCB returns to normal after the initiating FStart or FStop input clears. In this mode NonCascade is forced OFF. |

Table 6.13: FCB Flags

### 6.10.4 Input Priorities

In the event of multiple input activities, the input priorities for an FCB and the affected control outputs are:

| Priority | Input | Action |
|---|---|---|
| Highest | MstrStop | StopOut active |
| | MstrStart | StartOut active. |
| | MStop | StopOut active |
| | MStart | StartOut active. |
| | DPin | StopOut active |
| | FStart (FStop in Invert mode) | StartOut (StopOut) active. |
| Lowest | FStop (FStart) | StopOut (StartOut) active |

Table 6.14: Input Priorities

### 6.10.5 Status Timeout

Each FCB has an associated Fan Status Timeout period parameter. This period defines the maximum time the FCB will wait for a fan to start or stop when commanded by the FCB. The timeout period can be set to any value between 5 and 90 seconds.

Note that the Status Timer starts only when the Stop or Start outputs are activated for the first time. This results in an instantaneous fault condition being generated if, for example, the fan stops after initially starting on command during the feedback period.

### 6.10.6 Stabilisation Period

A 'Stabilisation Period' (SP) parameter is provided to allow the Fire inputs to the FCB to stabilise prior to activation,. This period can be set from 0 to 9 seconds, and sets the duration the FCB waits for the FStart & FStop inputs to stabilise after any state change.

This parameter is particularly important if the Non-Cascading flag is set, because the FCB latches the state of the first Fire event it registers, and this state remains even if the opposite sense Fire input is subsequently activated. The SP value should be set if near-simultaneous activation of FStart & Fstop is likely and the initial output state is important. **F120A** event processing is done in a series of blocks and the FCB processing may be interspersed between processing other events. This may mean, for example, that if FStart & FStop are generated by devices on different loops, then, even if the devices were activated simultaneously, it is possible for the FCB to register one event occurring before the other. This may result in the FCB latching into the "wrong" state, even though the Priority flag setting suggests this is not possible.

### 6.10.7 Duct Probe Delay

This is a fixed period of 65 seconds. AS/NZS1668.1:1998 allows a 60 to 75 sec window for this parameter.

### 6.10.8 Fan Interlock Delay

A fixed 5-second timer operates when either the StartOut or StopOut outputs is deactivated. This prevents either output from operating again until the timer expires, and prevents unwanted control conflicts.

### 6.10.9 Freeze Timer

The FCB Freeze timer prevents activation of non-cascading FCB's some time after the first non-cascading FCB activates. This is used if only a limited number of fan units can be activated simultaneously, due to airflow considerations.

If non-zero, the timer starts when the first Fire input (either FStart or FStop) activates on any non-cascading FCB. Once the timer times out, the FCB system becomes "frozen" After this point Fire inputs for all non-cascading FCB's are ignored, and the operating state of all non-cascading FCB's is locked, although Manual & Duct Probe inputs still override the Fire inputs as usual.

The 'frozen' state is reset by the system FanRst event, but only if there are no active Fire inputs present on any non-cascading FCB's.

The timer does not interact with FCB's that are non-latching, or are in the default (Cascading) mode.

The FCB Freeze timer can be set in the General sub-menu of the Engineer's Menu (refer to Section 9.7.5 ).

A System Event (FCB Frozen) indicates whether the FCB Freeze timer has operated (refer to Section 6.4).

### 6.10.10 Event Generation

The FCB generates various events during operation that can be viewed in the Event log:

| Event | Description |
|---|---|
| Normal (Auto) | FCB has reverted to normal (Auto) operation – no control commands are active. |
| Manual ON | Manual ON operation has been selected via the MStart input. |
| Manual OFF | Manual OFF operation has been selected via the MStop input. |
| Fire Start | The FCB has been commanded to Start via the automatic FStart input. |
| Fire Stop | The FCB has been commanded to Stop via the automatic FStop input |
| FAULT - StopFail | The fan has been commanded to stop, but the fan is running & the status timeout period has expired. This event appears in the Fault queue on the LCD. |
| FAULT - StartFail | The fan has been commanded to start, but the fan is stopped & the status timeout period has expired. This event appears in the Fault queue on the LCD. |
| Fault Cleared | The StartFail or StopFail fault has cleared due to the fan reaching the correct operating condition. |
| DuctProbe Active | The DPIn input monitoring the duct probe has activated. |
| DuctProbe OFF | The fan has been turned off due to duct probe activity. |
| Reset | The FCB has been Reset via a "FanRst" output being activated. |

Table 6.15: Event Generation

# 7. OPERATING THE FIRE-FIGHTER FACILITY

For information on the controls and indicators of the **F120A** front panel, and the Fire-Fighter Facility in particular, refer to Section 2: F120A Front Panel Controls and Display.

The Facility highlights and provides key controls to enable an 'Alarm' to be satisfactorily dealt with.

For reference, the layout of the Fire-Fighter Facility is shown below.

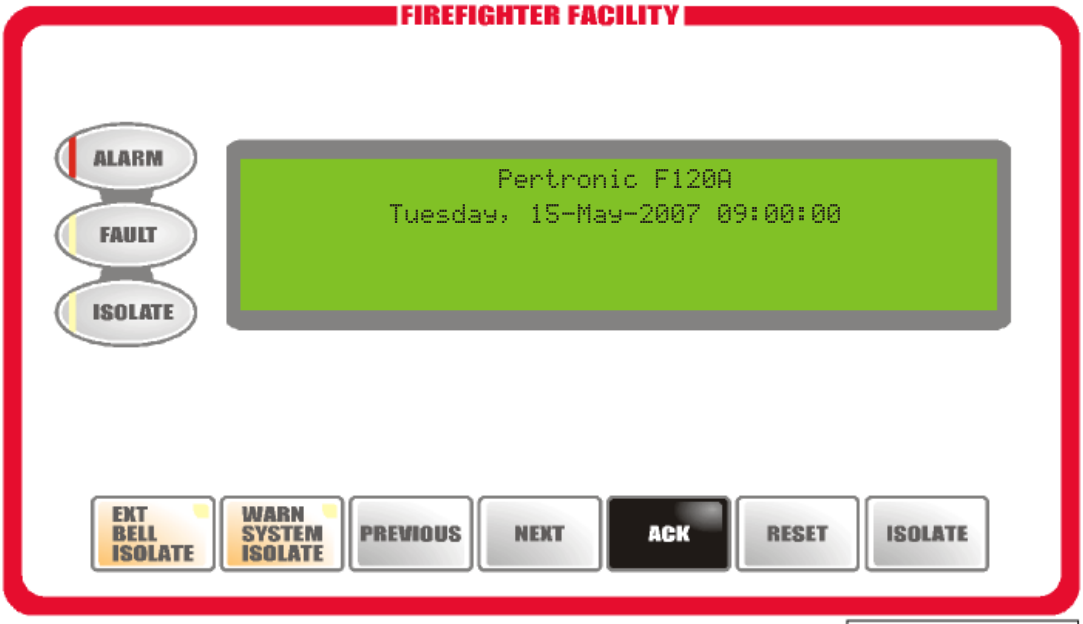


Figure 7.1: Fire-Fighter Facility

F120 Fire-Fighter Facility Au 20070725

## 7.1 Event Display Queues

When an event occurs on the **F120A** system, it is put into one of four event queues. The event queues are:

| | |
|---|---|
| Alarm Queue | (highest priority) |
| Isolate Queue, | |
| Fault Queue | |
| System Events Queue. | (lowest priority) |

An event queue that contains current information is deemed to be 'active'. The active event queue with the highest display priority is shown on the LCD display. If there is no keyboard activity within 30 seconds, and there is more than one item in the queue, the display is scrolled to the next queue event at 6 second intervals.

**Alarm Queue**: contains only active and acknowledged alarms. When all the alarms have been isolated or reset, the Alarm Queue is reset and becomes inactive.

**Isolate Queue:** contains details of zones or detectors that are currently isolated and have been isolated through the Fire-Fighter Facility, or through the menu system.

**Fault Queue:** contains faults associated with the analogue loops, such as 'Double Address' or 'Loop Open Circuit', as well as faults other than loop faults such as 'Battery Low' or 'Mains Lost'.

**System Events Queue:** displays informational events such as 'ACF Isolated' or 'Input Active'.

The Alarm Queue has the highest LCD display priority, the Isolate Queue being next, down to the System Event Queue that has the lowest display priority. Queues with lower priority may be displayed by pressing **Enter** on the front panel. The display returns to the active queue with the highest priority after no keyboard activity has taken place within 30 seconds.

When more than one item is in a queue, a message at the top right of the LCD display will indicate the position of the displayed message in the queue, and the total number of items in the queue. For the alarm queue, this indication alternates with the text '**more…**'.

Items within a queue may be scrolled back and forth on the display by using **PREVIOUS** and **NEXT** or by using the left/right arrow keys.

For further information on queues refer to Section 2.3.2: Event Display and Event Queues.

## 7.2 Devices in Alarm – Acknowledge, Reset, and Isolate

When the **F120A** is 'Normal', the LCD display shows the 'Normal' message including the date and time:

```
Pertronic F120A
Tuesday, 27-Jan-2004 08:23:15
```

When an 'Alarm' occurs, the **FIRE** LED flashes, the internal sounder activates, and the relays corresponding to the device configuration are activated. The LCD displays:

```
**ALARM** (smoke)                    ALM:1/1
Loc: Library / Left Wing

Z0005:L02D027(OPT), 03:00:40 27-01-04
```

The display indicates that the optical smoke detector on loop 2 with address 27 is in 'Alarm', and that the alarm occurred at 40 seconds past 3am on the 25th Jan 2004. The portion of the display showing '**ALM:1/1**' (at the top right corner of the display) indicates that it is the first alarm message out of (in this case) one, and indicates that there are no more fire conditions on the system.

If there were further alarms, the original or first alarm will remain on the display, but the message field would change to reflect the total number of alarm messages. If 3 more alarms occurred, the message field would read '**ALM:1/4**'.

Up to 400 total current events may be queued, prioritised by event type.

When the fire-fighters arrive at the **F120A**, the internal sounder may be silenced by pressing any key. Any new alarms will re-activate the internal sounder.

The sounders are silenced by pressing **WARNING SYS ISOLATE.**

Multiple alarm messages may be scrolled through using the **PREVIOUS** and **NEXT** push-buttons. For instance, if the '**ALM:1/4**' message is displayed, pressing **NEXT** will display '**ALM:2/4**'. Three more presses of **NEXT** will scroll the display through '**3/4**' and '**4/4**' back to '**1/4**'. Similarly, **PREVIOUS** will scroll the alarms backward through the display.

An acknowledged alarm remains in the 'Alarm' state queue, although it becomes a lower priority than an un-acknowledged alarm:

```
Alarm Acknowledged                   ALM:4/4
Loc: Drainage Room

Z0005:L04M021(MCP), 14:23:59 27-01-04
```

Devices in alarm may also be reset.

Scroll through the alarm queue until the device to be reset is displayed on the LCD. Press **RESET**. The following message is displayed:

```
**ALARM** (smoke)                    ALM:1/1
Loc: Library / Left Wing
Current State: NORMAL
Press ACK to confirm reset...
```

The status of the device can be checked before deciding to reset the device. The panel will wait up to 10 seconds for confirmation and then revert to the original alarm message. If reset is desired, **ACK** is then pressed, and the device will be reset. The following message appears on the screen and remains until the device returns to normal or re-triggers into alarm.

```
Device(s) Resetting
  Please Wait...
```

In a similar fashion to the ‘Reset’ operation, a device in ‘Alarm’ may be isolated.

Select the device in alarm to be isolated on the LCD display, and press **ISOLATE**. As for reset, the user will be asked to acknowledge the request by pressing **ACK** within 10 seconds. The isolated device is put into the isolate queue:

```
ISOLATE [ALARM (SMOKE)]          ISO:1/2
Loc: Library / Left Wing

Z0005:L02D027(OPT), 07:16:55 25-01-04
```

The **ISOLATE** LED is lit when any device or zone is isolated.

When a device is isolated, the alarm indicator on the device remains illuminated to enable the fire engineer to find the device. **RESET** may be used from the Isolate queue display to reset devices that had been isolated, but remain in the ‘Alarm’ state. Devices may also be de-isolated through the menu system.

## 7.3 Isolate, Fault and System Events Queues

The **PREVIOUS** and **NEXT** push-buttons are used to scroll through the current entries in a particular queue.

To scroll through the active queues, press **Enter**.

When an input device is isolated, the alarm indicator on the device remains illuminated. The device is reset when de-isolated.

# 8. OPERATING THE USER MENU

The User Menu is reached by pressing any soft-key **F1**-**F4** on the front panel of the **F120A**.

- press **Menu** to exit the menu system in stages.

The User Menu consists of a number of options that can be selected through the soft-keys **F1** through to **F4**. For example, the first User Menu display is

```
                User Menu

 Engineer   Status   History   Isolate →
```

To choose the **Isolate** function, press **F4**; and to choose **Status**, press **F2**.

The arrow symbol indicates that there are more menu items. These can be displayed by pressing the ➔ key on the front panel. (Similarly when '←' is displayed at the left side of the LCD, pressing the ← key will display the previous menu items). A summary of the User Menu function tree is:

| Menu Item | Description |
|---|---|
| Engineer | Enter the Engineer's menu. |
| Status | Show status for a loop device. |
| History | View historical event buffer. |
| Isolate | Isolate loop devices and zones. |
| System | Show system status information. |
| Test | Various system tests. |
| Clock | Adjust internal Real-Time Clock. |
| Reset | Reset all alarms. |

## 8.1 Engineer – Engineer's Menu

This activates the Engineer's Menu. Refer to Section 9: Operating the Engineer's Menu.

## 8.2 Status – Status Monitor

The Status Monitor function allows any particular loop device to be selected, and its type, alarm status and returned analogue value are displayed.

The status is displayed after the loop and module or detector number has been entered using the arrow keys, and no keys have been pressed for 1 second.

A typical display for a smoke detector is:

```
Status for Device: L07D078 (ION)
Loc: Central Watchroom
Current=5% of alarm
State: NORMAL
```

This indicates that the current level of smoke in the device is 5% of the way between the Clean Air value and the Alarm level for that detector.

For a thermal detector, the **F120A** displays an approximate temperature, along with the alarm temperature, as follows:

```
Status for Device: L03D152 (HEAT)
Loc: Lift Shaft 1
Temperature=29C (Alarm=57C)
State: NORMAL
```

Note that the display is calibrated to the System Sensor 5251P detector (the most common in use), so may give inaccurate results for other models (e.g. older 5551 & European variants 5251EM or 5251HTEM), as the panel cannot differentiate between them. Even for 5251P devices, the temperature display may have a ±5°C error from 25°C to 90°C, and more than that outside this range.

### 8.2.1 Status Display Modes

Three (3) display modes are available in the Status display. The normal one, as described above interprets the raw data from the monitored device into percentage alarm or temperature. If the user presses the **ACK** key (or the device doesn't allow such interpretation) the next mode is used. This shows raw pulse width values. For detectors, the display looks like this:

```
Status for Device: L07D078 (OPT)
Loc: Central Watchroom
Current=800 CA=784, AL=2192
State: NORMAL
```

This shows that detector 78 on loop 7 is a photoelectric smoke detector, has a clean air analogue value of 784 microseconds and has a current analogue value of 800 microseconds. The alarm level for this detector is 2192 microseconds (see Section 12: Detectors and Modules, for details).

A typical display for a Manual Call-Point is:

```
Status for Device: L04M001 (MCP)
Loc: Boardroom B2
Current=1056
State: NORMAL
```

This shows that module 1 on loop 4 is a Manual Call-Point located in "Boardroom B2", it is 'Normal', and is returning an analogue pulse width value of 1056 microseconds.

The final mode (press **ACK** again) provides more low-level diagnostics:

```
Status for Device: L07D078 (ION)
Loc: Central Watchroom
PW's=288,288,584,800,576 Ctrl=5
State: NORMAL
```

This mode displays all of the raw data sent by the device (PW1 to PW5), as well as the control information currently being sent to the device by the loop driver hardware. Interpreting these values is beyond the scope of this manual; contact Pertronic Industries technical support for details if required.

Press **ACK** to cycle back to the normal display mode.

Press **Enter** to toggle the LED output(s) for the current device. This can be used during commissioning and testing of the system as an installation and programming aid. The LED turns OFF when another address is selected, or if the operator exits the Status Monitor menu.

> Note: this may activate relays or sounders associated with the LED annunciator of the device – <u>use with caution</u>.

Output devices may also be monitored from the Status Monitor – in these cases the analogue reading given represents the level present due to the EOL-terminated output circuit.

### 8.2.2 Device Status Descriptors

The status descriptors are:

| Descriptor | Meaning |
|---|---|
| NORMAL | The device is in its 'Normal' state. The text "(nonexistent)" is added when the current device is not configured. |
| ALARM (MCP)<br>ALARM (SMOKE)<br>ALARM (TEST)<br>ALARM | The device is in 'Alarm'. Devices may generate different qualifiers depending on the type, for example, the LPRS (Loop Responder) can generate either SMOKE or MCP alarms. |
| ACTIVE | A device programmed as an 'Input' (i.e. non-brigade, relay or bell functions) is in 'Alarm'. |
| FAULT | A generic 'Fault' message if the particular Fault doesn't match any of the specific Fault conditions defined below. |
| MISSING | The device is not present on the loop, or not responding to a poll. |
| MISMATCH | The device found at this address doesn't match the programmed device type. |
| EXTRA | The device found at this address is not supposed to exist; i.e. it has not been programmed into the configuration memory. |
| TEST FAIL | The device failed its automatic self-test. |
| PREALARM | The device is in 'Pre-Alarm'. A 'Pre-Alarm' condition indicates that the device is close to the 'Alarm' threshold. |
| DOUBLE | Two or more devices are responding to the same address. |
| RESTART | A Loop Responder has lost power and is restarting. |
| ISOLATOR | The built-in loop isolator relay on either a Loop Responder or a Loop Relay board has triggered, indicating a short-circuit beyond the device. |
| SUPPLY FLT | A Loop Responder has detected a problem with its internal voltage supply to the conventional detector circuits.<br>A Loop Relay board has detected a fault in the external power supply (if used). |
| HI FAULT | Caused by a detector failing its internal threshold adjustment (same as MAINT DEF for some types), or by a Loop Responder circuit's level drifting up above the 'Normal' band (towards a short-circuit). |
| LO FAULT | This Fault is a symptom of a problem with the sensing electronics on a detector resulting in abnormally low analogue readings. Replace the detector. |
| SHORT | A Loop Responder has detected a short-circuit condition.<br>This will generate a 'Fault' condition. |
| OPEN | A Loop Responder has detected an open-circuit condition.<br>- generates a 'Fault' condition from NZS4512:2003 Loop Responders<br>- generates an 'Alarm' condition from NZS4512:1997 Loop Responders |
| MAINT FLT | Maintenance Fault. The detector's Clean Air value has increased beyond a safe level and the Loop Driver board can no longer maintain the detector sensitivity. The detector should be cleaned. |
| AVF INIT | A device with AVF (Automatic Verification Facility) has triggered once, and is in the AVF window awaiting a second activation to trigger an 'Alarm'. |
| CCT RESET | A Loop Responder circuit is resetting after an 'Alarm' condition. |
| OFF | A 3-Position Switch (type SW3) is in the OFF position. |
| ON | A 3-Position Switch (type SW3) is in the ON position. |
| DIS/ISO | A FAAST device has been disabled or isolated via its local control panel. |

## 8.3 History – Display Historical Event Log

This option allows the operator to view the 1999-Event Log maintained by the **F120A**. Any system events that occur are recorded in the event log. The log is 'circular', i.e. when a new event is added, the oldest (2000th) event is removed from the list.

Initially the most recent recorded event (log number 000) is displayed. The arrow keys, **PREVIOUS** and **NEXT** are used to scroll forward and backward through the buffer. **PREVIOUS** selects the next most recent event. A typical Event Log display is:

```
0004: ISOLATE (cleared)
Loc: Reception Ground Floor
Z0001:L01D123(OPT), 11:50:49 29-01-04
   Top        -10        +10
```

Press **F1** to return the display to the last entry. **F2** will move the display 10 entries toward the most recent entry, and **F3** will move the display 10 entries away from the most recent entry.

This example shows that this is the 4th entry in the log, and that the optical detector with address 123 on loop 1 had an alarm at 11:50:49AM on the 29th January 2004.

Refer to Section 11: LCD Messages for a description of the possible LCD messages generated by the **F120A**.

## 8.4 Isolate – Isolate Menu

Select this option to access the Isolate Menu:

```
                Isolate Menu


  Device     Zone     SprInput    LogicBlk→
```

Any device, zone or panel function capable of generating an alarm may be isolated or removed from isolate.

The available options are:

### 8.4.1 Device Isolate

Select **Device (F1)** from the Isolate Menu to bring up the Device Isolate Menu:

```
           Device Isolate Menu
Address: L01D001  (Type=OPT)
Loc: Room 103
Status:  Not Isolated
```

The desired device address may be selected using the arrow keys. The type of the device selected is also displayed. The display shows the isolation status of the selected device, which may be one of the following:

| | |
|---|---|
| **Not Isolated** | The device is not isolated |
| **ISOLATED** | The device is isolated |
| **ISOLATED (via zone xx)** | The device's zone is isolated. It is not possible to directly de-isolate the device; the zone must be de-isolated from the Zone Isolate menu. |
| **Not Present** | There is no device programmed at this address. |

Press **ISOLATE** to toggle the isolate status of the selected device (not isolated or isolated).

If the selected device is already isolated and is also in the alarm state, and an attempt is made to de-isolate that device, a warning message is displayed, and a confirmation to proceed with the de-isolate requested:

```
           Device Isolate Menu
*WARNING* Device state: ALARM (MCP)
    Press ACK to confirm de-isolate
Status:  ISOLATED
```

The request is ignored if not acknowledged within 10 seconds.

### 8.4.2 Zone Isolate

Select **Zone (F2)** from the Isolate Menu to access the Zone Isolate Menu:

```
            Zone Isolate Menu
Z0001: East Wing
Status: ISOLATED
 Toggle
```

The zone number is selected using the arrow keys.

Press **Toggle** or **ISOLATE** to switch the zone from isolated to not isolated. If individual devices are isolated in that zone, these too will be de-isolated automatically.

Press **Details** to view the details of each individual device which is isolated.

```
          Active Isolates for Z0001
002: L01D024 [Alarm]
Loc: Room 114
           Active Item Count: 3
```

Press **PREVIOUS** or **NEXT** to step through the active isolated devices – line 4 of the display indicates the number of devices currently isolated.

**Zone De-Isolate:** if any input device within a zone is 'off-normal' when an attempt is made to de-isolate the Zone, a warning message is displayed with a request to **ACK**nowledge the de-isolate operation. The request is ignored if not acknowledged within 10 seconds - note there is no warning if isolation is removed using the ISO input for the zone. Individual devices which were isolated prior to the Zone being isolated, are included in the collective Zone Isolate and are therefore automatically de-isolated.

If any input device within a zone is in the 'Alarm' state when an attempt is made to de-isolate the zone, a warning message is displayed with a request to acknowledge the de-isolate operation. The request is ignored if not acknowledged within 10 seconds (note there is no warning if isolation is removed using the ISO input for the zone). If individual devices are isolated in that zone, these too will be de-isolated automatically.

### 8.4.3 LocalMCP Isolate

Select **LocalMCP (F3)** from the Isolate Menu to access the Local MCP Isolate menu.

```
          Local MCP Isolate Menu

Status: Not Isolated
 Toggle
```

The Status line shows the isolation state of the local call-point input.

Press **Toggle** or **ISOLATE** to toggle the state of the MCP isolation.

### 8.4.4 Logic Block Isolate

Select **LogicBlk (F4)** from the Isolate Menu to access the Logic Block Isolate Menu:

```
        Logic Block Isolate Menu
LB001: Security System
Status: Not Isolated
 Toggle
```

The Status line shows the isolation state of the block.

Press **Toggle** or **ISOLATE** to toggle the state of the selected logic block.

### 8.4.5 Timer Isolate

Select **Timer** (➔ then **F1**) from the Isolate Menu to access the Timer Isolate Menu:

```
            Timer Isolate Menu
Tmr01: Floor 1 Investigate
Status: Not Isolated
 Toggle
```

The Status line shows the isolation state of the timer.

Press **Toggle** or **ISOLATE** to toggle the state of the selected timer.

### 8.4.6 Network Input Isolate

Select **NetInput** (➔ then **F2)** from the Isolate Menu to access the Network Input Isolate Menu:

```
       Network Input Isolate Menu
Net001: Engineering Annex
Status: Not Isolated
 Toggle
```

The Status line shows the isolation state of the selected Network input.

Press **Toggle** or **ISOLATE** to toggle the isolation state of this input.

### 8.4.7 Clear All - Clear ALL Isolates

Select **ClearAll** (➔ then **F3)** from the Isolate Menu to bring up the Clear All Menu:

```
              Isolate Menu

  Clear ALL Isolates - are you sure?
  Yes                              No
```

Press **Yes** to confirm the 'Clear All' action, or press **No** to return to the previous menu level.

## 8.5 System - Display the System Status

Select **System** to display the firmware revision level, supply and battery voltages, and the total number of fires and faults the **F120A** has processed to date:

```
     System Status (F120 v3.04.02n/G4)
Supply:27.21V  Battery:27.01V
Total Fires:3 Faults:24
```

Press **Menu** to return to the User Menu.

### 8.5.1 Versions – Display Loop Driver Versions

Pressing **Versions** brings up the following screen, where the actual version numbers of the connected loop driver boards can be verified:

```
          Loop Driver Versions
Board 1:v3.12A

                                 OK
```

Use the **PREVIOUS**, **NEXT** or cursor keys to change the loop driver number; press **OK** to exit.

## 8.6 Test - System Tests

The System Test menu allows various aspects of the system to be tested without physically initiating events via external inputs. Upon selection, the following menu is displayed:

```
              System Test Menu


   Auto      Device      Lamp
```

### 8.6.1 Auto Test

The Auto Test function tests the main Brigade interface connections, the charger interface and the loop devices. When selected, the buzzer gives two short beeps and the screen displays:

```
              Auto-Test
*WARNING* Auto-Test will call brigade!
   Press ACK to start auto-test...
```

This is a reminder that the Brigade 'Alarm' and 'Fault' signals will be set by the test - isolate the panel from the Brigade before proceeding. Press **ACK** to start the test sequence:

```
              Auto-Test

             Fire Test...
```

The full sequence is:

| | |
|---|---|
| Fire Test | Fire relay is activated for 5 seconds. |
| Fault Test | Fault relay is activated for 5 seconds. |
| Charger Test | Charger low output activated for 5 seconds – this causes the charger supply voltage to drop so the **F120A** is powered by the battery only. |
| Starting Loop Device Test | A 2-second message indicating the start of the loop device test sequence. This test is handled by the loop driver boards and may continue for some time after starting.<br>The display shows<br>`Device Test in progress...`<br>. . .until the tests are complete. |

Press **Menu** at any time to cancel the test. Press **Enter** to skip to the next step of the test sequence.

### 8.6.2 Device Test

The Device Test menu allows functional testing of loop devices - the menu will look similar to this example:

```
Testing Device: L15D077 (OPT)
Loc: Level 15 Stairwell North
State: NORMAL
   Test
```

Select **Test** to toggle the test state for each device ON. When the device is in test mode, the text "[TEST]" appears after the device's state and the softkey changes to **Reset**. Press **Reset** to turn Test mode OFF for the device. Exiting the Device Test menu automatically resets all tests in progress.

The Test command puts input devices into their internal test mode, generating an active 'Alarm' condition for that device. Note that alarm processing in Test mode is identical to normal processing; the brigade may be called and all programmed flags and outputs for the device are triggered. The only exception is that the menu system is not aborted with test alarms; alarms on devices that are not being tested still operate normally; the menu is exited and all tests are cancelled.

Output modules turn ON when tested; providing a simple method of remotely operating relays.

### 8.6.3 Lamp Test

The Lamp Test menu sends a lamp test command to the full system and tests the LCD display by sending a repeating block pattern. The LED annunciators on both LED and LCD mimics are tested, and Fan Controller (FANC) devices cycle their LED annunciators.

Press **Menu** to cancel the Lamp Test and revert to the Test Menu.

## 8.7 Clock - Set System Time and Date

This option is used to change the system time and date:

```
User Menu
Set System Time & Date
Mon, 02-Feb-2004 14:05:33
Accept   Set Zero   Revert   Cancel
```

Use the arrow keys to set the date and time. The soft-key options are:

**Accept** Loads the new time and date values into the system clock. Same as **Enter** key.

**Set Zero** Resets the seconds field to 0 and increments the minute field by 1 if the seconds field was greater than 30.

**Revert** Reloads the displayed time and date from the system clock

**Cancel** Aborts the menu without setting the time. Same as **Menu** key.

## 8.8 Reset – Global Reset

This option selects the reset function. The following message is displayed on the LCD.

```
Global Reset

Are you *SURE* you want to reset?
Yes                              No
```

If **Yes** (or **Enter**) is selected, the **F120A** resets all alarms on the panel. This is functionally equivalent to scrolling through the entire display queue & pressing **RESET**, **ACK** for every event. If any resets were performed, the panel exits from the menu and reverts to the Normal display with the following message.

```
Device(s) Resetting
  Please Wait...
```

If there were no events to be reset, the panel simply reverts to the User Menu.

**NOTE**: Because loop devices may take a few seconds to reset, it is possible that dependent logical inputs (from Logic Blocks or Timers) will remain active after the initial Reset operation, leaving the corresponding item active. In this case a second global reset is required to restore these items to Normal.

# 9. OPERATING THE ENGINEER'S MENU

The Engineer's Menu is accessed by selecting 'Engineer' from the User Menu.

The operator must enter a 5-digit password before being allowed to proceed.

```
            Engineer's Menu
Enter Keycode: 10000
```

The password number is entered using the arrow keys and then pressing **Enter**. If an incorrect code is entered, the LCD displays a hash code similar to this:

```
            Engineer's Menu
Enter Keycode: 12345
Hashed=5430012A878E56C109FB
```

The **F120A** generates a one-time random password, which is encoded into the displayed hash value. The user must contact the local Pertronic Industries' distributor (phone numbers on cover sheet) to obtain the correct password, which can then be entered to access the Engineer's Menu.

Note that for pre-v3.01 software, the default password is '00000'. If an incorrect password is entered, the random password hash code is not generated until ten (10) attempts have been made to enter the correct password – each attempt MUST use a different password combination.

For v3.01 software and later, the default password is '10000' and any incorrect password will generate a random password hash code.

When the correct password has been entered, the Engineer's Menu is displayed:

```
            Engineer's Menu


 Devices    Zones      Groups    LogicBlk→
```

As for the User Menu, keys **F1** to **F4** select the desired function and the ← and → keys step through the available menu items.

A summary of the Engineer's menu tree is:

| Menu Item | Description |
|---|---|
| Devices | Edit or add loop devices. |
| Zones | Edit Zone descriptions & zonal non-brigade timers. |
| Groups | Edit group output lists. |
| LogicBlk | Set up Boolean Logic Blocks. |
| Mimics | Set up the number of LCD and/or LED mimics connected to the **F120A**. |
| Learn | Automatically learn the system or loop configuration. |
| General | Set up general system options. |
| Timers | Edit general-purpose timers |
| Keycode | Change Engineer's keycode (password). |
| SysEvent | Set up actions to be taken on global system events. |
| 24h Test | Set daily test time. |
| Network | Enable/disable networked operation & set up Network Inputs. |
| FanCtrl | Set up Fan Control Blocks |
| Default | Returns the **F120A** configuration to factory default by erasing the EEPROM and deleting all configuration data and history information. |
| Ext Bus | Detect or set the number of loop drivers on the **F120A** Extender bus. |

Table 9.1: Engineer's Menu Tree

Most Engineer Menu functions update or modify the non-volatile memory of the **F120A**. For the memory to be modified, the MEMORY LOCK switch (located on the Master **F120A** PCB) must be OFF.

If memory access is attempted, and MEMORY LOCK is in the ON position, the warning message

```
Please turn Memory Lock switch OFF
```

is displayed to prompt the user to enable memory updates by moving the switch to the OFF position (disable memory lock). When the edit operations have been completed, the Memory Lock switch must be turned to the ON position to disable memory updates. If this is not done, the message

```
Please turn Memory Lock Switch ON
```

is displayed when attempting to exit from the Engineer's Menu. This prompts the user to move the switch to the ON position to protect the memory. If **Menu** is pressed again (to exit) and the switch remains in the OFF position (memory unprotected) the Engineer's Menu is exited and a fault is displayed.

## 9.1 Devices – Add, Modify Device Configuration

This option allows new devices to be added and modifications to be made to existing loop device settings:

```
Device:L01D001 Type:OPT  Zone:0001
AVF:OFF Sens:-1/+0 Flags:12B---L
Desc: Abbey, Main Hall
   Desc     Outputs     Flags      Delete
```

The **Left/Right** cursor keys move the cursor between the configuration fields and the **Up/Down** keys increment or decrement the current item within its allowable range. Table 8.2 shows the fields and the range of each.

Press **Enter** to accept the changes made to the current device and return to the Engineer's Menu. Changing the device address, automatically saves the new configuration data and displays the settings for the new device. Pressing **Menu** ignores any changes and returns to the Engineer's Menu.

For input devices that are modules (including Manual Call-Points) the Sens field is not displayed but AVF is displayed for all input devices except Heat detectors, MCPs, Isolate and 3-Way switches.

Table 9.2: Fields of the Device Edit function

| Field | Description | Range |
|---|---|---|
| Lxx | Loop Number | 01 – 20 |
| Dxx<br>Mxx | Device Address | D001 – D159 for Detectors<br>M001 – M099 for Call-Points, Modules and Relays |
| Type | Device Type<br><br>Detectors: | Select one of:<br>- - - - No device programmed<br>OPT Photoelectric (Optical) Smoke Detector<br>ION Ionisation Smoke Detector<br>HEAT Heat Detector<br>LASR Pinnacle™ Intelligent Laser Detector<br>ACCL Acclimate™, COPTIR™ and PTIR™ Intelligent Photo/Thermal Detector<br>FLTX Filtrex™ Filtered Optical Smoke Detector<br>BEAM Intelligent Beam Detector<br>vXXXX Virtual Detector (XXXX denotes parent type)<br><br>Table continues . . . . . |

| Field | Description | Range |
|---|---|---|
| | Input Modules: | MCP Manual Call-Point<br>LPRS Pertronic Loop Responder<br>ZMU M502 Zone Input Module<br>FSW Flow Switch<br>VMD Valve Monitor<br>PSW Pressure Switch<br>SPR Sprinkler<br>SIP Sub-Indicator Panel<br>ISO Isolate Switch<br>SW Switch Input<br>SW_H Hidden Switch Input<br>VES VESDA Input<br>BMIF Conventional Beam detector via Module Interface<br>M512 System Sensor M512 Conventional Interface<br>SW3 3-Position Switch |
| | Output Modules: | RLY Loop Relay<br>RLYM Monitored Loop Relay<br>ACF Loop Relay defined as an ACF Relay<br>ACFM Monitored ACF Loop Relay<br>DHR Loop Relay defined as a Door Holder Relay<br>WRN Loop Relay defined as a Sounder Relay<br>WRNM Loop Relay defined as a Sounder Relay (Monitored)<br>FANC Fan Controller<br>FANR Fan Relay Interface |
| zone | Zone number | 0000 – 9999 (see Section 9.12). |
| AVF | Automatic Verification Facility | OFF or ON<br>(all input devices except Heat detectors, MCPs, Isolate and 3-Way switches) |
| Sens | Detector Sensitivity (detectors only) | -5 to +3 (Depends on Detector Type)<br>0 is 'Normal' sensitivity,<br>-1 to -5 are less sensitive,<br>+1 to +3 are more sensitive<br>Used with Day/Night mode and Virtual Detectors.<br>When Day/Night mode is active, 2 sensitivities are shown: the "Day" value followed by the "Night" |
| Flags | WEBADZKL | The symbols shown represent functions to be acted upon when the device is in 'Alarm'. These functions are:<br>W activate **WARNING SYSTEM** relay<br>E activate **EXTERNAL BELL** relay<br>B activate **FIRE** relay (call Brigade)<br>A activate the **ACF** relay<br>D activate the **DOOR HOLDER** relay<br>Z sound Buzzer (Alarm event)<br>K Brigade Latch (latches if Brigade called)<br>L the input device alarm is latched<br>**Note:** certain flag combinations are not permitted - for example setting the Brigade bit forces the Latching bit to be set |

| Field | Description | Range |
|---|---|---|
| Desc | Device Descriptor | Choose the Desc menu item to edit the device descriptor. |

### 9.1.1 Desc – Edit Descriptor:

Once selected, the cursor moves to the descriptor field and the text can be edited:

```
Device: L01D001 Type:OPT  Zone:0001
AVF:OFF Sens:+0 Flags:12B---L
Desc: Abbey, Main Hall_
  Space    BkSpace   Num/Alph  Tgl Case
```

The **Left/Right** cursor keys move the cursor and the **Up/Down** keys change the character under the cursor. The **Space** key inserts a space at the current position and **BkSpace** deletes the character to the left of the cursor. The **Num/Alph** key toggles the current character under the cursor between '1' and 'a'. **Tgl Case** switches between upper- and lower-case alphabetic characters.

When the descriptor entry has been completed, press **Enter** to accept the new text, or **Menu** to revert to the original text.

### 9.1.2 Outputs - Edit Outputs for the Selected Device

To program or update an output (1 to 4) for the selected device, select 'Outputs' to display the Edit Outputs screen:

```
   Editing Outputs for Device: L01D001
Output 01: LED 001
Activated by: Alarm
   Test     EvType   OutType    Exit
```

Use the arrow keys to select the output number (1 to 4), and select 'OutType' to choose the output type (Relay, LED, Group, etc.) for the selected output.

For each output type, use the arrow keys to select the item numbers or addresses, as required.

The 'Test' soft-key allows the current output, or all of the device's outputs, to be activated for testing. The display changes to

```
   Editing Outputs for Device: L01D001
Output 01: LED 001
        Select outputs to test...
            Current     All     Cancel
```

Select 'Current' or 'All' to turn the current output or all outputs programmed for the device ON. The display changes to:

```
   Editing Outputs for Device: L01D001
Output 01: LED 001
            Outputs activated.
        Press any key to return...
```

Press any button to cancel the test - the display reverts to the output editing menu.

For loop devices only, an extra option allows each output to be activated by Alarm (the default), Pre-Alarm, Fault, OFF and ON. Use 'EvType' softkey to cycle around the available options.

Note that, although the editor allows any event type to be programmed, only valid types actually have an effect; for instance, selecting Pre-Alarm will not do anything for a relay device. See section 6.1 above for more information.

**NOTE**: Pressing **Enter** or **Menu** from the 'Edit Output' menu is equivalent; the new information is saved, but only to a temporary copy of the device configuration data being edited. New data is not written to the configuration memory until the next address is selected or **Enter** is pressed from the main device editing screen.

### 9.1.3 Flags – Edit Device Flags

The **Flags** item selects the flag-editing menu:

```
        Editing flags for L01D001
Flags: 12B--ZL
Flag Name: Bell 1
  Cancel                          OK
```

The cursor **Left/Right** keys select the flags, with the description of the flag shown underneath. The **Up/Down** keys toggle the flag ON (displays the flag letter) or OFF (displays a dash).

Press **Enter** or select **OK** to confirm when finished. To ignore changes made, press **Menu** or select **Cancel.**

Note: Not all combinations of flags are permitted. The **F120A** may ignore requests to change the flag, eg. setting Brigade sets Latching; any attempt to turn the Latching flag OFF will fail.

### 9.1.4 Delete - Delete Device

**Delete** is used to remove the selected device from the system. A confirmation (Yes or No) is required before the action is taken. The device configuration and descriptor are cleared to the default condition.

A device can also be deleted by setting the device type to nothing (- - - -); in which case the device is removed, but the existing device settings and descriptor are retained.

## 9.2 Zones – Configure Zones and Edit Zone Descriptors

This option displays the edit function for the zones:

```
            Zone Editing Menu
Zone:0016
Desc: Level 7 Centre Core
   Desc     Outputs      More      Delete
```

The zone number required (0001 to 9999) is chosen by using the Up/Down arrow keys. Note that there are only 256 zones in the panel; displayed zone numbers are affected by the Network Zone Offset parameter (see Section 9.12).

To edit the descriptor for the selected zone, select **Desc** and use the editing functions available on the zone descriptor edit screen. (refer to Section 9.1.1: Desc – Edit Descriptor: for a description of the edit functions).

Each zone has 8 outputs associated. By selecting **Outputs**, output types can be assigned as required for each output. (refer to Section 9.1.2: Outputs - Edit Outputs for the Selected Device for a description for output type selection).

Similarly, as described in Section 9.1.4: Delete - Delete Device, the **Delete** selection will erase the configuration (i.e. outputs and descriptor for the zone) to the default condition.

Selecting **More** displays a sub-menu for editing the Zone Timer or AAF functions for the zone:

```
            Zone Editing Menu
Zone:0016
Desc: Level 7 Centre Core
  Timer       AAF                 Cancel
```

### 9.2.1 Zone Timer Configuration

Selecting **Timer** enters the configuration menu for the Zone Timer as shown:

```
      Zone 0001 Timer Configuration
Period: 05:00 Flags: 12BADZL
Run:LED0015  End:LED0016,L01M057
 Out:Run   Out:End    Flags    Cancel
```

The timer period can be adjusted from 00:00 (disable timer) to 60:00 (1 hour) in 1-second increments using the cursor keys. The timer flags behave in the same way as the flags for a device, except that the timer always generates an ‘Alarm’ event, even if all flags are clear.

There are 4 outputs available for each timer:

- two trigger while the timer is running
- two trigger when the timer completes.

These are set up as for any other output via the **Out:Run** and **Out:End** soft-keys.

Details of the Zone Timer operation can be found in Section 6.7: Zonal Timers.

### 9.2.2 Zone AAF Configuration

```
Zone 0016 AAF - Enabled:Y  ZoneReset:Y
T1-00:30  T2-01:00  Flags:WEBAD--SH
AckIn: Loop Device
  Inputs   Outputs    Flags     Cancel
```

This option allows AAF to be enabled or disabled for the zone, and sets up the operating parameters for the AAF function. The cursor keys can change the time periods and the Zone Reset option's state.

The **Inputs** soft key allows the Acknowledge input to be edited.

The **Outputs** soft key allows the 3 outputs (Acknowledge Time, Investigation Time and Complete) to be edited.

The **Flags** soft key allows the AAF timer completion flags to be set.

Details of the Zonal AAF operation can be found in Section 6.8: Zonal Alarm Acknowledgement Facility.

## 9.3 Groups - Configure Group Outputs

This option selects the Group editing function:

```
          Group Editing Menu
Group:001 Outputs in use:2
L01M001,LED003
             Edit       Undo    Delete
```

The group number (001 to 200) is selected using the Up/Down arrow keys.

The number of outputs configured for use for the selected group is indicated in the 'Outputs in Use' field. In this case two outputs have been configured. The output types used are listed (space permitting) on the next line of the display. In the example, a relay at module address 1 of loop 1 and LED 3 are in use.

Select **Edit** to access the group's Output Edit menu where the output types can be selected for each of the 15 outputs within the group:

```
     Editing Outputs for Group:01
Output 02: LED 003

   Test                OutType    Exit
```

This menu is identical to the Device and Zone Output menus, as described in Section 9.1.2: Outputs - Edit Outputs for the Selected Device.

## 9.4 LogicBlk – Configure Boolean Logic Blocks

This option selects the logic block editing functions. Details of Logic Block operation can be found in Section 6.5:Boolean Logic Blocks.

```
        Logic Block Editing Menu
Block:001  Mode:OR   Flags:-2-------H
Desc:Class Change
  Inputs   Outputs     Desc      Flags
```

The top-level menu allows the selection of the block number to edit the output flags, description and the Boolean mode of the block. The Left/Right cursor keys can be used to select the required field and the Up/Down keys cycle around the available values.

### 9.4.1 Logic Block Inputs

Select **Inputs** to start the input editing screen:

```
      Editing Inputs for Block:001
Input:1  Type:Loop Device  Invert:No
Any of L01D001..D001 State:Alarm
  InType     Edit      Invert      Exit
```

The Up/Down keys select the desired input for the block.

- the **InType** soft-key cycles the input type around all the available values.

- the **Edit** soft-key enables the cursor keys in order to change the parameters for the selected input type.
- the **Invert** soft-key toggles the state of the inversion flag for the selected input.

### 9.4.2 Logic Block Outputs

The block outputs are edited similar to the loop devices as described in Section 9.1.2: Outputs - Edit Outputs for the Selected Device.

### 9.4.3 Logic Block Descriptor

The block descriptor is edited as for the loop device descriptor as described in Section 9.1.1: Desc – Edit Descriptor:

## 9.5 Mimics - Configure LED and LCD Mimics

This menu allows the number of addressed LED and LCD mimics present on the system to be set:

```
            Mimic Editing Menu
Mimic Count - LED:03, LCD:01

  Cancel                              OK
```

The arrow keys are used to select the fields and to increment or decrement the numeric fields.

## 9.6 Learn - Auto Learn Function

**Learn** allows each loop to be interrogated and the devices detected included in the system configuration.

```
            Auto-Learn Menu
 Use up and down arrows for loop number

  System   Loop01              NonExist
```

Either select **System** to learn all the system or to learn individual circuits, use the Up/Down arrow keys to select the required circuit: **LoopXX**

The **NonExist** option erases any configured devices that are present beyond the last known loop on the system to avoid generation of “Missing” events for such devices.

After a loop has been learned (5-10 seconds for the first loop, 1 second each thereafter), the LCD displays:

```
            Auto-Learn Menu
   Loop 2 done: 73 devices (D:54,M:19)
       New=9, Changed=1, Removed=1
  Update   Defaults  AddOnly     Skip
```

This shows the total number of devices (Detectors & Modules) found on each loop, and indicates the number of new, changed (device type), and removed (no longer present) devices. Available options are

**Update** New devices found are updated in the system configuration. Non-existent devices are removed. Each new device is given the default settings for that device type.

Addresses with just a device type change will have just the new type stored.

**Defaults** Each detected device is given the default settings for that device type. Non-existent devices are removed.

**AddOnly** Similar to Update, but non-existent devices are not removed from the configuration.

**Skip** No changes are saved and the results for the next loop are shown. Pressing **Menu** has the same effect.

## 9.7 General - Configure General System Options

The **General** option allows some miscellaneous system configuration options to be changed:

```
          General System Options
WSM:Y EBM:Y  FltBuzz:Y  PreBuzz:N
Log24:Y  Blnk:Y  DN:N  PreFlt:Y  WSS1:N
 WarnSys   ExtBell   FltBuzz   PreBuzz →
```

### 9.7.1 System Flags

These are all simple toggle functions that switch between Enabled (Y) and Disabled (N):

- The soft-key functions **WarnSys** and **ExtBell** allow monitoring of each of the main Bell relays to be enabled or disabled.
- The **FltBuzz** option toggles the "Fault Buzzer" from enabled to disabled. If enabled, the local buzzer sounds when any Fault state activates, and when OFF, the buzzer sounds only when an Alarm condition is generated.
- The **PreBuzz** option toggles the state of the global "Pre-Alarm Buzzer" flag. This controls whether any 'Pre-Alarm' condition on a detector will sound the buzzer.
- The **LogTest** button (on the 2nd 'page' of soft-keys) enables or disables the generation of daily test messages to the 'Historical Event' log.
- The **DetBlink** option globally enables or disables detector and input module LED blinking.
- The **DayNight** option controls whether Day/Night mode is used on the panel. The **F120A** panel Night Mode is activated by the "**Night Mode**" output type as described in Section 6.2.9: Activate Night Mode
- The **PreFlt** option controls the **F120A** behaviour for Pre-Alarm events. When enabled, Pre-Alarms are treated as panel faults and appear in the main Fault queue on the display, otherwise they are placed in the lower-priority System queue.
- The **WS Stg1** option controls the output settings for relay modules. When active, the relay modules' LEDs are not activated when the relay is active. For some loop-powered sounder hardware (e.g. KAC), this causes a different tone to be output. Note that the "Sounder S1 switch" output type (see 6.2.15) dynamically switches the output mode to the alternate behaviour.
- The **SprEvac** option toggles the state of the Sprinkler Evacuation Disable flag. This option, when active, prevents the F120 from activating the Sprinkler LED signal sent to LED mimics & amplifiers via the RS485 bus. This signal is generated whenever the local SPR input, or a FSW, PSW or SPR loop device is in alarm state and triggers evacuation on all connected amplifiers. This option is intended for use in a scenario when multiple sprinkler zones exist and a global evacuation from this source is not desired.

### 9.7.2 Day/Night Mode

**Day/Night** toggles whether Day/Night Mode is active. When Day/Night mode is active, all detectors can have a second Sensitivity value set to be used when the panel enters Night Mode. The **F120A** panel's Night Mode is activated by the "**Night Mode**" output type as described in Section 6.2.9: Activate Night Mode.

### 9.7.3 Local MCP Options

Selecting **LocalMCP** opens up a sub-menu for setting up options for the local MCP input on the Master board:

```
          Local MCP Setup Menu
Zone:0000  Flags:WEBADZL
Desc:
   Desc      Flags
```

The zone assignment can be changed using the cursor keys. The MCP descriptor can be changed by pressing the **Desc** key.

**Flags:** activates the cursor to allow selection of the Local MCP output flags using the cursor keys.

The output flags available, with display representations in brackets, are:

- WarnSys [W]
- ExtBell [E]
- Brigade [B] relay
- on-board ACF [A] relay
- on-board Door Holder [D] relay
- Alarm buzzer [Z]
- Latch flag [L]

For example, if the Flags field is WE—DZ, both Warning system circuits will operate, the Door Holder relay will operate and the internal buzzer will sound when the MCP has operated, however the ACF and Brigade relays will not.

### 9.7.4 SiteInfo- Edit Site–Specific Information

The **SiteInfo** option starts the Site Information Menu that allows customisation of the LCD display appearance in the 'Normal' condition. Note that all text shown on the 'Normal' display is centred.

```
        Site Information Menu


UsrText1  UsrText2  TimeFmt
```

The **UsrText1** and **UsrText2** options allow editing of the "User Text" which appears on lines 3 and 4 of the display respectively.

The **TimeFmt** option allows a user-defined format for the time displayed on line 2. The format string can contain any normal characters, with the exception of the special characters defined below.

| Character | Field | Notes |
|---|---|---|
| h | Hours | Leading zeroes determined by run length. Always in 24-hour format. |
| m | Minutes | Leading zeroes determined by run length. |
| s | Seconds | Leading zeroes determined by run length. |
| d | Day | Gives numerical date for runs of 1 or 2. Gives day name in truncated 3-character form for run of 3, otherwise full day name. |
| M | Month | Gives numerical month for runs of 1 or 2. Gives month name in truncated 3-character form for run of 3, otherwise full month name. |
| y | Year | Gives 2-digit year for runs of 2 or less, otherwise 4-digit year. |
| N,n | Day/Night Mode | Displays the status of Day/Night mode:<br>N "D" or "N"<br>NN "DM" or "NM"<br>NNN "Day" or "Ngt"<br>NNNN "DayMode" or "NightMode"<br>Using "n" displays the text only when NightMode is active, otherwise the field is blank.<br>Using "N" displays the text in Day or Night mode |

The following examples assume the current date is 9:05:15pm on Thursday, 29-Jun-2006 and the panel is in Night Mode.

| Format String | Result |
|---|---|
| dddd, dd-MMM-yyyy hh:mm:ss NNNN | Thursday, 29-Jun-2006 21:05:15 NightMode |
| d/M/y h:mm n | 29/6/06 21:05 N |
| NN yyyy-MM-dd hh:mm:ss | NM 2006-06-29 21:05 |
| ddd dd-MM-yy hh:mm nnn | Thu 29-06-06 21:05:15 Ngt |
| MMMM d, yyyy hh:mm nnnn | June 29, 2006 21:05 NightMode |

### 9.7.5 FCFreeze – Edit FCB Freeze Timer Period

This option allows adjustment of the FCB Freeze delay period (see Section 6.10.9: Freeze Timer)

```
        Edit FCB Freeze Period
Freeze Period: 20 (sec - 00 to disable)

                                  Exit
```

Use the cursor keys to adjust the time period. A zero value completely disables the FCB Freeze function. The maximum value is 90 seconds.

### 9.7.6 DSAdjust – Automatic Daylight Savings Adjustment

The **F120A** is capable of automatically correcting the system clock for Daylight Savings time. Selecting this option brings up the Daylight Savings adjustment menu:

```
Daylight Savings Enabled:Yes
Start: last Sun in Oct, 02:00
End: last Sun in Mar, 03:00
 Disable                 OK       Cancel
```

The adjustment can be disabled completely, or the rules governing the changeover time can be changed to suit various regions (this display shows the current NSW/VIC/ACT/SA rules).

The 'Start' option determines when the clock is to be advanced 1 hour; the 'End' option selects the criteria for reverting back to 'normal' time. The valid parameters are:

| Name | Range | Description |
|---|---|---|
| Week Number | 1st, 2nd, 3rd, 4th, last | Selects the week number within the month for the changeover. The value 'last' matches either the 4th or 5th week in the month, depending on whether a 5th week exists for the chosen weekday. |
| Weekday | Mon to Sun | The day of week for the changeover. |
| Month | Jan to Dec | The month for the changeover. |
| Time | 00:00 to 23:59 | The time of day (settable in 1 minute increments) for the changeover. |

The cursor keys can be used to configure all rule values: use **PREVIOUS/NEXT/Left/Right** to move between fields and **Up/Down** to change. Press the **OK** softkey or **Enter** to confirm changes once finished.

### 9.7.7 Diags – System Diagnostic Options

This starts a menu that is used to set up a number of special settings for diagnostic or commissioning purposes. The LCD screen is shown below:

```
       System Diagnostic Options
FaultFilter: MaxPerHr=OFF  Delay=OFF
MaintFilter:ON  Action=Fault    BRP:08h
  Cancel                More       OK
```

Use the cursor keys to scroll between items and to increment or decrement the values. The parameters are described below:

| Name | Default | Range | Description |
|---|---|---|---|
| Fault Filter Count | 0 (OFF) | 0..50 | Sets the maximum number of times that Brigade fault relay can be activated per hour. Faults are logged and displayed normally, but the relay is only activated up to the set number of times. Used for filtering out intermittent fault conditions from notifying the brigade too often.<br>Note: only active if the main door input is active (door closed), so that normal relay behaviour can be observed while servicing is carried out. |
| Fault Filter Period | 0 (OFF) | 0..45s | Sets the duration a fault condition must be present on the F120 before the Brigade fault relay is activated. Similar to above, except time based. Can be used for suppressing known intermittent faults from calling the brigade. |

| Name | Default | Range | Description |
|---|---|---|---|
| Maintenance Filter | ON | ON/OFF | Normally, Maintenance events generated by the loop drivers are ignored except for a 1 minute period at the end of the 24 hour test cycle. Turning the filter off means that Maintenance events will be generated immediately. |
| Maintenance Action | Fault | Fault/ LogOnly | Determines whether Maintenance events are treated as Faults, or simply logged into the panel's history buffer. |
| Buzzer Retrigger Period | 8 hours | 0 (OFF) 1..99 hours | Adjusts the time delay before re-sounding the buzzer after generating panel events which require a re-trigger (isolates, for example). The Standard specifies 8 hours, but the period can be adjusted between 1 and 99 hours, or disabled completely if required. |

Note that the Fault filter parameters act sequentially; the period requirement must be satisfied before the count is incremented.

## Note that in all cases, standards may be violated by misuse!

**Fault Filters should normally be used for commissioning purposes only, or at least temporarily where there is some persistent, intermittent fault condition that cannot be immediately rectified.**

#### 9.7.7.1 Extra Diagnostics Menu

Selecting **More** from the Diagnostic menu brings up the **Extra Diagnostics Menu, shown below**:

```
        Extra Diagnostics Menu
Log SW_H:Y  Log FANR:N  Log DHR:Y

 LogSW_H    LogFANR     LogDHR      OK
```

The two options available here are to allow event logging for the **SW_H**, **FANR**, and **DHR** device types to be suppressed. Normally, these devices generate messages in the log for every activation, although they do not appear on the display. For some installations, these events may cause the event log to fill prematurely, making analysis difficult. Disabling the logging only prevents the normal activation messages from being logged; other events (such as faults) will still be logged.

### 9.8 Timers – Edit General-Purpose Timers

This option allows manual editing of the general-purpose timers:

```
Editing Timer 01 - Flags: -------SHO-
T1: 00:05:00  T2: 00:00:00
Desc: 5-minute warning
  Inputs  Outputs      Desc    Flags
```

On this screen the cursor keys can be used to change the timer number to be edited, together with the timer configuration flags and the two timer periods. The value of T1 must be non-zero for the timer to operate. The T1 and T2 values are limited to 12 hours. Note that certain combinations of flags are not permitted; eg. the Continuous flag cannot be set if either T2 is zero or the Latch flag is set.

#### 9.8.1 Timer Inputs

Editing the timer inputs is essentially the same as for the Logic Block inputs in Section 9.4.1: Logic Block Inputs, with the exception that the input names are used (Start, Reset, Isolate and Override) instead of numbers.

#### 9.8.2 Timer Outputs

Selecting **Outputs** brings up an intermediate menu so that the T1 or T2 outputs can be selected:

```
      Select Outputs for Timer 01


  T1Out      T2Out                 Exit
```

Selecting either **T1Out** or **T2Out** brings up the standard output editing menu.

## 9.9 Keycode - Change the Engineer's Menu Password

This option is used to change the Engineer's Menu password or keycode: Default is 10000

```
            Engineer's Menu
New Keycode: 10000
```

Use the arrow keys to change the keycode digits, and press **Enter** to save, or **Menu** to return to the previous menu level.

## 9.10 SysEvent – System Event Outputs

This function displays a sub-menu that allows mapping of selected system events to up to 32 sets of 6 outputs. Refer to Section 6.4: System Events for further information on the events that can be mapped.

The editing menu appears as shown below:

```
      System Event Editing Menu
Index:01
Event Type: Fire
   Type     Outputs     Undo     Delete
```

The cursor keys select the index of the "slot" in use; each slot can map a single system event to 6 standard outputs. If more than 6 are desired, a second slot can be programmed with the same event type to add another 6 outputs.

The **Type** softkey cycles around the available event types.

- the **Undo** softkey restores the selected slot to the copy held in the configuration memory.
- the **Delete** softkey erases the current slot.

## 9.11 24H Test - Set 24-Hour Test Start Time

This function sets the '24-Hour Test' start time:

```
      24hr Test Configuration Menu

24hr test time: 08:00
  Cancel                          OK
```

Use the arrow keys to set the daily test start time (hours:minutes). The test reduces the charger supply voltage to 22.8Vdc for 1 hour after this time, ensuring the **F120A** system is powered from the batteries, which tests the batteries capacity to carry the load.

## 9.12 Network

The **F120A** supports networking, allowing up to 99 **F100A** or **F120A** Fire Alarm panels to be interconnected. This provides the ability for indications and signalling of selected events to be reported to other panels. Network inputs are configured in a manner similar to other loop devices.

Select **Network** to enter the configuration menu for Network Inputs:

```
      Network Configuration Menu
Enabled:No

  Enable     Inputs
```

Select **Enable** to turn on the Network input function for the panel. (refer to: 0700 Network Technical (AUS) manual for the installation and operation of the Network Interface)

The display is:

```
      Network Configuration Menu
Enabled:Yes  Supervisory Panel:No
Zone Offset:0000
 Disable     Inputs    SupPanel  ZoneOfs
```

Use **Disable** to turn off the network function.

The **SupPanel** option toggles the “Supervisory” mode of the panel. When enabled, this simply disables monitoring of the local **F120A** display’s communications, so that a network display can substitute for the panel display.

The **ZoneOfs** parameter is used to set the global Zone Offset using the cursor keys. This option is used where a large number of panels on a network are required to use unique zone numbers for display. The offset simply increases all apparent zone numbers by the offset value. The range of zone numbers remains at 256, and zone 0 is still valid in those cases where a zone number is not required. The maximum value of the Zone Offset is 9743, resulting in a displayed zone range of 9744 to 9999, inclusive.

**Note:** Both the Supervisory & Zone Offset settings remain active even if the network is disabled!

The **Inputs** options allows the editing of the individual Network Inputs:

```
      Network Configuration Menu
Input001  Zone:0120  Flags:----------
Desc: Engineering Annex
   Desc     Output      Flags
```

At this point, it is possible to change the network input number and its associated zone number using the cursor keys. The softkey options are outlined below.

### 9.12.1 Desc-Network Input Description

**Desc** allows the user to input a descriptor for the Network input selected

### 9.12.2 Output

**Output** allows the user to select outputs that will activate at the occurrence of the Network Input activation.

### 9.12.3 Flags

**Flags** allows the user to select the appropriate flags for the Network Input.

## 9.13 FanCtrl – Fan Control Block configuration

This option selects the Fan Control Block (FCB) editing functions.

Details of FCB operation can be found in Section 6.10: Fan Control Blocks.

.

```
     Fan Control Block Editing Menu
FCB:001  Mode:ON Flags:--L STO:10 SP:2
Desc:West Stairwell Pressurisation
  Inputs   Outputs     Desc     Flags
```

The top-level menu allows the selection of the FCB number to edit the mode, flags, Status Timeout and the description of the block. The Left/Right cursor keys select the required field and the Up/Down keys cycle around the available values.

### 9.13.1 Status Timeout Period

The STO can be set to any value between 05 and 90 using the cursor keys. The STO sets the time delay between fan actuation and activating a fault condition due to incorrect fan operation.

### 9.13.2 Stabilisation Period

The SP value can be set from 0 to 9 using the cursor keys. The SP value determines the amount of settling time on the FStart and FStop inputs before processing by the FCB.

### 9.13.3 FCB Inputs

Select **Inputs** to start the input editing screen:

```
      Editing Inputs for Block:001
Input:FStart Type:Loop Device Inv:No
Any of L01D001..D001 State:Alarm
  InType     Edit     Invert      Exit
```

The Up/Down keys select the desired input for the block. FCB input functions are outlined in Section 6.10.1.

- the **InType** soft-key cycles the input type around all the available values.
- the **Edit** soft-key enables the cursor keys in order to change the parameters for the selected input type.
- the **Invert** soft-key toggles the state of the inversion flag for the selected input.

### 9.13.4 FCB Outputs

The block outputs are edited similar to the loop devices as described in Section 9.1.2:Outputs - Edit Outputs for the Selected Device. The only difference for the FCB is that each output has a defined function (as described in Section 6.10: Fan Control Blocks.

The output is selected with the cursor keys, as for inputs.

### 9.13.5 FCB Descriptor

The descriptor is edited as for the loop device descriptor as described in Section 9.1.1: Desc – Edit Descriptor:.

### 9.13.6 FCB Flags

Selecting Flags allows the user to select the appropriate flags for the Fan Control Block. See Section 6.10: Fan Control Blocks for a description of the FCB flags and their meanings.

## 9.14 Defaults – Reset Configuration to Defaults

This option is used to return the **F120A** to factory default values.

**NOTE: Performing this action erases all configuration data and history information!**

When selected, the following screen is shown, accompanied by rapid beeping:

```
****************************************
****** ERASE CONFIGURATION DATA? ******
****************************************
  Cancel                            OK
```

This cancels automatically if no keys are pressed within 30s – any other key silences the buzzer. If **OK** or **Enter** is pressed, the buzzer cadence changes and a prompt to unlock the configuration memory is displayed:

```
****************************************
Please turn Memory Lock switch OFF...
****************************************
  Cancel                            OK
```

The code waits for the switch to be unlocked for a minimum of 2 seconds so there is still a chance to back out, before initiating the erase operation on both the Flash ROM (configuration data) and the non-volatile RAM (history & isolate states). The panel then immediately resets and re-initialises the configuration memory to default settings (see Section 3, System Startup and System Tests).

## 9.15 Ext Bus - Extender configuration menu

This function allows Extender (Loop Driver) boards to be configured:

```
      Extender Configuration Menu
Total extender boards: 02
Board 01 Active
            Detect
```

The total number of Extender boards for the system may be changed using the arrow keys.

The **Detect** softkey interrogates the Extender bus for the number of controller cards.

If any changes were made, pressing **Enter** produces the following prompt:

```
      Extender Configuration Menu

   Do you want to save your changes?
   Yes                              No
```

Press **Yes** or **Enter** to save the new configuration information and return to the Engineer's Menu.

# 10. SYSTEM FEATURES

## 10.1 Fire Signalling Relay (Master Alarm)

The **FIRE** relay is de-energised when the **F120A** is in the 'Normal' or non-Fire condition; it energises for the 'Fire' condition.

An **F120A** 'Fire' condition occurs when a device is in the 'Alarm' condition, the device has not been isolated, and when the device has 'Brigade' set in its configuration.

One set of change-over contacts is available via screw terminals. The contacts are rated 1.25A @ 24V (resistive load).

A second set of change-over contacts is available via IDC terminals. These terminals are available for use by brigade transmission devices (SGDs) together with contacts from the 'Fault' relay, 'ATS Test' and 'ATS Isolate' relays. The contacts are rated 1.25A @ 24V (resistive).

## 10.2 MCP Input

An input is provided for a Manual Call-Point connection. This input is monitored with a 10kΩ resistor. The input is active when the input is short-circuited. This input is always latched, but may have the other standard activation flags as for loop devices (refer to Table 4.2). See Section 9.7.2 for programming details.

## 10.3 Fault Signalling Relay

This relay is energised when the **F120A** is in the 'Normal' condition ie. there is no Fault, and is de-energised when a 'Fault' occurs.

An **F120A** 'Fault' condition occurs when:

- a system Fault occurs (loop Fault, low battery, missing detector, etc)
- the system microprocessor fails
- all power to the **F120A** is lost (battery and Mains)

Refer to Section 11: LCD Messages for information on the types of Fault detected and displayed by the **F120A**.

The system microprocessor periodically updates a 'watchdog timer'. If the system microprocessor fails, the watchdog timer is no longer updated and times out, causing a 'Fault' condition.

When power to the **F120A** is lost, the **Fault** relay de-energises causing a 'Fault' condition.

One set of changeover contacts is available via screw terminals - the contacts are rated 1.25A @ 24V (resistive load).

A second set of changeover contacts is provided via an IDC terminal for use by brigade transmission devices along with contacts from the 'Fire' relay and 'Battery Fault' relay. The contacts are rated 1.25A @ 24Vdc (resistive).

## 10.4 Warning System Relay

A monitored relay contact, **WARNING SYSTEM**, is provided for connection to an external EWIS system (Early Warning Intercommunication System), internal bells, or building alarm sounders. The relay is normally-open, closing to activate the EWIS (or other) system. A 10kΩ end of line resistor monitors the integrity of the wiring. The contact is rated 5A @ 24V (resistive).

**WARNING SYSTEM** is activated when a device is in the alarm condition, the device has not been isolated, and that the device has '**W**arning System' set in its configuration.

Operation of **WARN SYS ISOLATE** de-activates the 'Warning System' relay.

**Note**: Loop relays configured as 'Warning System' relays are activated independently by loop input devices through the mapping system. **WARN SYS ISOLATE** also de-activates these relays.

## 10.5 Isolate Warning System (WARN SYS ISOLATE)

This push-button isolates the on-board relay, **WARNING SYSTEM**, and loop relays configured as 'Warning System relays' (**WRN** & **WRNM** types) by disabling operation of these relays. When the push-button LED is ON, the Warning System relays are isolated. **WARN SYS ISOLATE** has a toggle function - alternate presses of the push-button correspondingly isolate or enable use of the Warning System relays.

If **WARN SYS ISOLATE** is left on for more than 7 hours, the internal buzzer activates. Press any push-button on the front panel to silence the internal sounder.

Activation of **WARN SYSTEM ON** over-rides **WARN SYS ISOLATE**.

Operation of the Warning System Isolate control located at mimic panels also disables the Warning System relays.

## 10.6 External Bell Circuit.

The **F120A** provides one monitored External Bell circuit. The total Bell and Warning System load should not exceed the capacity of the power supply. These circuits are monitored and require a 10kΩ EOL resistor to give a system normal indication.

If the Bell circuit has an open-circuit, short-circuit or a partial short, a fault signal is generated and a fault message is shown on the LCD display - unless overwritten by a message with higher priority.

## 10.7 External Bell Isolate (EXT BELL ISOLATE)

The push-button **EXT BELL ISOLATE** located within the Fire-Fighter Facility is provided to silence the External Bell. Only the Bell connected to **EXT BELL** is affected. The LED associated with the push-button is ON when the Bell is isolated. Repeatedly pushing **EXT BELL ISOLATE** toggles the Bell between the isolated and non-isolated conditions.

If **EXT BELL ISOLATE** is left ON for more than 7 hours, the internal buzzer activates. Press any push-button on the front panel to silence the internal buzzer.

Activation of **WARN SYSTEM ON** over-rides **EXT BELL ISOLATE**.

Operation of the External Bell Isolate control located at mimic panels also disables the External Bell.

## 10.8 ACF Relay

The on-board relay, **ACF RELAY**, provides a monitored contact (10kΩ EOL resistor) for ancillary control purposes (e.g. air conditioning, lifts etc.). The relay is normally de-energised. The contact is rated 1.25A @ 24V (resistive).

**ACF RELAY** is activated when a device is in the alarm condition, the device has not been isolated, and the device has '**A**CF' set in its configuration.

Operation of **ISOLATE ACF** de-activates **ACF RELAY**.

**Note**: Loop relays configured as 'ACF Relays' are activated independently through the mapping system. **ISOLATE ACF** de-activates these relays.

## 10.9 Isolate Ancillary Control Facility (Isolate ACF)

The push-button **ISOLATE ACF** is located on the front panel and is used to isolate the main PCB relay **ACF** and all loop relays configured as 'ACF'. When the push-button LED is ON, the ACF relays are isolated; and when the LED is OFF, the ACF relays are enabled. This push button has a toggle function as alternate presses of **ISOLATE ACF** correspondingly enable or isolate the ACF relays. All ACF relays are de-energised when the 'Isolate ACF' function is active.

If **ISOLATE ACF** is left on for more than 7 hours, the internal buzzer activates. Press any push-button on the front panel to silence the internal sounder.

Operation of the Isolate ACF control located at mimic panels also disables the ACF relays.

## 10.10 Door Holder Relay

The on-board relay, **DOOR HOLDER**, provides clean change-over contacts (rated 5A @ 24V) for Door Holder solenoid purposes. These contacts are not monitored.

**DOOR HOLDER** is activated when an initiating device (or timer, logic block…) becomes active and the '**D**oor Holder' configuration flag is set.

Operation of **Door Holder Isolate** de-activates the on-board Door Holder relay.

**Note:** Loop relays configured as 'Door Holder Relays' must be activated independently through the mapping system. **Door Holder Isolate** also de-activates these relays.

## 10.11 Door Holder Isolate

The push-button **Door Holder Isolate** is located on the front panel and is used to isolate the Master PCB relay **DOOR HOLDER** and all Door Holder loop relays. When the push-button LED is ON, the Door Holders are isolated; and when the LED is OFF, the Door Holder relays are enabled. This push button has a toggle function as alternate presses **Door Holder Isolate** correspondingly enable or isolate the Door Holder relays. All Door Holder relays are de-energised when the 'Door Holder Isolate' function is active.

If **Door Holder Isolate** is left on for more than 7 hours, the internal buzzer sounds. Pressing any push-button on the front panel silences the internal buzzer.

Operation of the **Door Holder Isolate** control located at mimic panels disables the Door Holder relays.

## 10.12 Battery Fail Relay

This relay de-energises when the battery voltage falls below 23.5Vdc.

A set of clean contacts rated 1.25A @ 24V is provided.

## 10.13 Evacuation Test

The push-button labelled **WARN SYSTEM ON**, located on the front panel is provided to operate the External Bell and Warning System.

Operation of the **WARN SYSTEM ON** control located at mimic panels will also carry out the Evacuation Test function at the **F120A**.

## 10.14 Device and Zone Isolate & Isolate Removal

Loop devices may be isolated in two ways:

- the first method is to use **ISOLATE** on the Fire-Fighter Facility when a device is in 'Alarm'. Press **ISOLATE** (then **ACK**) to isolate the displayed device (refer to Section 7: Operating The Fire-Fighter Facility, for more information).
- the second method for isolating devices, and also zones, is the User Menu. Devices or zones are selected through the menu, and can be put in to, or out of, the isolated state (refer to Section 8.4: Isolate – Isolate Menu for more information).

## 10.15 Internal Sounder (Buzzer)

The internal sounder is activated when any alarm condition is active, and has not been acknowledged.

Pressing any push-button on the front panel (usually **Enter**) silences the sounder, as well as performing the action associated with that push-button.

Terminals (**K5**) are provided on the keyboard/display PCB for the connection of an external sounder.

## 10.16 24-Hour Auto Test

Once every 24 hours (at a specified time – refer to Section 9.11: 24H Test - Set 24-Hour Test Start Time) the system automatically enters the 24-Hour Test sequence.

A 1-hour power down sequence is initiated. The charger voltage is reduced from 27.4Vdc to 22.8Vdc to allow the **F120A** to operate from the battery alone for 1 hour. The battery voltage must remain above 24.8Vdc otherwise a low battery error will result. If this error occurs, the appropriate Fault message is displayed on the LCD, and the **Power Supply Fault** LED illuminates.

If an 'Alarm' or 'Fault' condition exists on the **F120A** before the commencement of the 24-Hour test, or occurs during the 24-Hour test, the test is aborted.

### 10.16.1 Battery Recovery Timer

At the end of the 24hr test, or if either ExtBell/WarnSys relay is activated, the panel may allow up to 55 minutes for the battery voltage to recover, during which time the “Charger Low” fault is suppressed. This allows a low charger voltage to be tolerated while the power supply recharges the battery. If the recovery timer starts, the **F120A** stores an entry into the event log (the entry is deferred, so if the charger voltage returns to the acceptable range within 10s of starting the recovery timer, the entry is not logged). Similarly, the 55 minute period is cut short if the charger voltage rises above the threshold (26.3V).

## 10.17 Walk Test

Press **Walk Test** on the front panel to initiate the Walk Test function.

The **F120A** then enters Walk Test, the associated push-button LED turns ON, and the LCD displays

```
Walk Test ON                    SYS:1/1

Logged at 08:56:21, Tue 22-Jan-2008
```

The **F120A** switches into a self-resetting non-latching mode. Panel operation is essentially identical, except that when the operated device is restored to ‘Normal’, the **F120A** automatically resets that circuit.

A conventional detector on a Loop Responder requires two activations (minimum) before it will trigger. Once activated, the detector ‘reset’ time is approximately 30 to 60 seconds – this is a result of the buffering between the Loop Responder and the **F120A** Panel

If the cabinet door is closed with the **F120A** in the Walk Test condition, the internal buzzer sounds and a ‘Fault’ condition (Door Interlock Fault) is signalled. If this condition is not corrected, the Walk Test mode times out after 45 minutes and ‘Normal’ operation resumes.

Press the push-button **Walk Test** again to exit Walk Test.

## 10.18 PCB Master Reset (RESET): SW2

The **RESET** push-button on the **F120A** PCB provides a software reset of the processor. This initialises and restarts the microprocessor, clears any latched ‘Fire’ conditions and energises the ‘Fault’ relay (‘Normal’ state).

Any faults generated during the start-up procedure are displayed, and a ‘Fault’ signal is transmitted by de-energising the **FAULT** relay.

## 10.19 Memory Lock: SW1

When the **MEMORY LOCK** switch on the **F120A** PCB is in the ON position, writing configuration data to the memory of the **F120A** is disabled; when it is in the OFF position, configuration writing is enabled. The switch must be in the OFF position whenever changes are made to the configuration through the menu system, or by means of a connected laptop.

If access to the memory is attempted (this can only be carried out from the Engineer’s Menu) when the **MEMORY LOCK** switch is in the ON position, the LCD displays

```
Please turn Memory Lock switch OFF
```

If an attempt is made to leave the Engineer’s Menu when **MEMORY LOCK** is OFF, a warning will be given on the LCD display:

```
Please turn Memory Lock switch ON
```

If the **MEMORY LOCK** switch is OFF at any time outside the Engineer's Menu, a 'Memory Lock Switch Fault' will be displayed.

## 10.20 Timer Power Supply.

The switched-mode power supply provides a temperature compensated 27.4Vdc (at 20°C) for system power and battery float charge purposes. Two power supply versions are available, 3A continuous (4A peak) and 12A output capability. Both are short-circuit protected, and have shunt diode reverse polarity protection.

The Timer Power Supply has a test function that decreases the output voltage to 22.4Vdc on start-up, during the auto-test operation, and for a 1 hour period every 24 hours. This verifies correct system operation on the standby battery. If the panel is in either 'Fault' or 'Alarm' condition, the 24-Hour test is not performed. If the battery voltage falls below 24.2Vdc during the 1 hour test period, a 'Fault' signal is generated for 5 seconds (minimum), the **Power Supply Fault** LED turns ON, and a `Battery Low` error message is latched on the LCD, requiring a manual Reset or subsequent test pass. On failure of the 24hr test due to battery capacity, the charger voltage is reapplied immediately to prevent a deep discharge.

## 10.21 Battery Capacity.

The **F120A** is designed to use two 12V sealed lead-acid batteries, rated from 6.5Ah to 24Ah in the 16U panel or higher capacity in the 28U and 40U rack panels.

The battery is protected by a 15A fuse on the F120 Power Distribution board.

Selection of the system batteries is an important consideration to ensure the **F120A** functions correctly if the Mains supply is absent

To calculate the system load, use the Battery Calculator on the Pertronic website:

http://www.pertronic.com.au/battery_calc/welcome.php

To determine the system load:

- install the panel and peripheral equipment
- apply battery (fully charged) and Mains power
- ensure the system is in its 'Normal' (no Faults or alarms) state.
- disconnect the battery (+) lead at the battery and insert an ammeter set to the 0-1A range - the ammeter should have an averaging function.
- a small current (the float charge current for the battery) only, should be detected at this stage.
- disconnect the Mains supply.
- the **F120A** is now running from the battery only and the current is the quiescent (normal) load current of the system - typically this will be about 200mA (average) for a 100 detector system.

System loading includes, among other considerations, devices on the analogue addressable loop, warning devices and devices on the RS485 bus.

The formula for battery capacity is:

Ampere-hours required: $\mathbf{AH = (24 \times I_Q) + (0{\cdot}5 \times I_A)}$,

where $\mathbf{I_Q}$ = quiescent current, $\mathbf{I_A}$ = alarm current.

Approved Batteries

| Manufacturer | Part Number | Description |
|---|---|---|
| Auscell | CJ12-7 | 12V 7AH |
| Auscell | CJ12-12 | 12V 12AH |
| Auscell | CJ12-18 | 12V 18AH |
| Auscell | CJ12-24 | 12V 24AH |
| Auscell | CJ12-26 | 12V 26AH |
| Auscell | CJ12-33 | 12V 33AH |
| Auscell | CJ12-40 | 12V 40AH |
| Auscell | CJ12-45 | 12V 45AH |
| Auscell | CJ12-55 | 12V 55AH |
| Auscell | CJ12-60 | 12V 60AH |

| Manufacturer | Part Number | Description |
|---|---|---|
| Auscell | CJ12-75 | 12V 75AH |
| Auscell | CJ12-85 | 12V 85AH |

## 10.22 Power Supply Fault Indication

If a power supply fault occurs, the **Power Supply Fault** LED turns ON immediately. For all faults except Mains failure, a 'Fault' condition is also generated by the 'Fault' relay and remains active until the fault is rectified. The cause of the Fault is also shown on the LCD display.

For Mains failure, the **MAINS** LED turns OFF immediately, but a 'Fault' condition is not generated until the door is closed, or until the Mains has been lost for more than 1 hour.

Possible causes for power supply faults are:

| Fault | LCD Message | Comments |
|---|---|---|
| Battery Missing | Battery Disconnected | Below 23.5V (checked every 10 seconds) when Mains supply is good |
| Battery Low | Battery Low | Below 24.36V when Mains is OFF or the charger is in Test mode. This fault is latched. |
| Supply Low Voltage | Charger Low | Below 25.9V when Mains supply is good |
| Supply High Voltage | Charger High | Above 28.8V |
| Mains Lost | Mains Supply Fault | Occurs immediately when the door is closed with the Mains disconnected.<br>Occurs 1 hour after the Mains is lost, if the door is closed. |
| Battery Test Fail | Battery Test Failure | Latched event generated whenever a low battery event is detected. The panel may return to normal after a low battery condition, but this message must be manually reset (using the **RESET** key). |

Table 10.1: Power Supply Fault Indication

## 10.23 Door Interlock

The **F120A** uses a microswitch to determine whether the panel door is open or closed. A 'Door Interlock' Fault signal is transmitted when the door is closed, if certain states are active or switches are 'Off-Normal'.

These states and switches are:

| | | |
|---|---|---|
| Warning System Isolate | Mains Lost | Lamp Test |
| External Bell Isolate | ACF Isolate | Memory Lock switch OFF |
| Walk Test | Door Holder Isolate | Network Isolate |
| Mimic Door Open | Door Interlock Input | Devices Resetting |
| Extender Board Reset | | |

Table 10.2: Door Interlock Faults

The interlock messages remain on the LCD until the door is opened or the condition is cleared.

## 10.24 Event Log

The **F120A** maintains a 2000-event log. Any events that occur, including the 'Door Open', are stored in the event log with the time and date associated with the event. Other pertinent data such as loop number and address for a device Fault is also stored when applicable. For example, a Fault for a module on loop 1 would look like

```
0001: FAULT
Loc: Room W-18
Z0002:L01M034(ACFM), 16:03:12 23-02-04
Top       -10         +10
```

The event log may be displayed on the LCD display by choosing the 'History' function in the User Menu (see Section 8.3: History – Display Historical Event Log)

## 10.25 Event Date and Time

A real-time clock maintains the **F120A** date and time. The date and time are updated using the 'Clock' option in the User Menu (see Section 8.7: Clock - Set System Time and Date)

## 10.26 Loop Driver Boards

Up to ten (10) 2-loop Loop Driver Extender boards can be connected to the **F120A**, through the Extender board bus (Master board: **K4** to Extender board: **K3**). Refer to Figure 17.4: System .

For convenience, panel mounted loop devices may connect to the loops via IDC connectors (Extender board: **K8** and **K2**) mounted adjacent to the screw terminal loop connectors (Extender board: **K5** and **K6**) on the Loop Driver PCBs.

## 10.27 Earth Connection and Monitoring

It is important that a good Ground or Earth connection is made to the **F120A** for transient protection. Screw terminals are provided on the **F120A** PCB and **F120A** Loop Driver Boards for this purpose. These Earth terminals should be connected to the panel Earth, which in turn is connected to the Mains Earth.

If any component of the **F120A** (such as one of the loops) has a hard or partial short to Earth, Earth leakage detection circuitry on the **F120A** will detect that condition, transmit a Fault, and write to the LCD display

```
Earth Leakage Fault (high)        FLT:1/1

Logged at 15:34:18, Mon 23-Feb-2004
```

The Earth fault detection circuit also indicates whether the Earth detected is to a high or low level (or both, in the case of transients or communications activity on loops)

## 10.28 External Sounder

Terminals are provided (**K5**, **Ext Buzz**) on the keyboard/display PCB for the connection of an external sounder. 24Vdc is provided at the (+) terminal, and the (-) terminal is pulled down to 0V, through an 820Ω resistor when the buzzer is active.

# 11. LCD MESSAGES

The LCD messages are of six main types - General Information, general Fault Warning, Device Alarm Warning, Start-Up dialogue, the User Menu dialogue, and the Engineer's Menu dialogue.

The sections below outline the LCD messages that may appear on the **F120A**, either in the Current Event queue or from the Historical Event list as viewed from the User Menu.

## 11.1 General Information Messages

Normal operation - no 'Alarm's, 'Fault's, or other messages:

```
Pertronic F120
Monday, 23-Feb-2004 14:43:22
```

The following messages are informative only and are shown in the current event queue along with Fault events:

| Message | Description |
|---|---|
| Walk Test ON<br>ACF Isolate ON<br>Door Holder Isolate ON | The specified button has been pressed. All of these conditions are common across all LCD mimics; pressing the button on any mimic will toggle the state, even if activated from another LCD display. |
| LED Mimic/WarnSys n Door<br>LCD Mimic n Door | The door is open on the specified mimic panel. This will generate a Door Interlock Fault if the main panel door is closed. |
| Input Active | A loop device configured as input-only (no Bell or Brigade flags set) has activated. This is presented in the standard alarm format as shown in Section 7.2: Devices in Alarm – Acknowledge, Reset, and Isolate. |

Table 11.1: LCD General Information Messages

## 11.2 System Faults

These are faults detected on the **F120A** panel, other than those generated by loop devices.

| Message | Description |
|---|---|
| Loop nn open | An open-circuit condition exists on the specified loop. Note that this may in fact be due to a line short between loop isolator devices which have activated to cause the loop to open. |
| Loop nn short | A short-circuit condition exists on the specified loop. This will be generated where the short occurs between the loop driver and the first isolator device on the loop. |
| Loops x+y FAILED!(Timeout) | The specified loops are offline, as the loop driver controlling them has failed to respond to commands sent by the Master. |
| Warn Sys Fault<br>Ext Bell Fault | The specified Bell relay circuit is open or short-circuit. |
| ACF Monitor Fault | The ACF relay is open or short-circuited. |
| Earth Leakage Fault (msg) | The Earth monitor circuit has detected a connection to Mains Earth (see Section 10.27: Earth Connection and Monitoring).<br>The value of "msg" is one of 'high', 'low' or 'high +low' |
| Program ROM CRC Check Failed | An error in the Program ROM area has been detected. This may indicate that panel operation will be unreliable. |
| Config ROM CRC Check Failed | An error in the Configuration ROM has been detected. The second line indicates the affected area. This may indicate that panel operation will be unreliable, but limited to the affected data only. |
| Memory Lock switch Fault | The Configuration Memory Lock switch is turned OFF, outside the Engineer's Menu. |
| External Fault Active | The EXT FLT input on the Master PCB is open. |

| Message | Description |
|---|---|
| Door Interlock Fault | The main panel door has been closed with certain panel functions active (see Section 10.23: Door Interlock). |
| Mains Supply Fault | The Mains supply has failed. |
| Charger Low Fault<br>Charger High Fault | The charger voltage is outside the normal operating range. If high, this may indicate a problem with the power supply unit itself. If low, then the problem may be with the PSU, or possibly that the battery is not charging properly. |
| Battery Disconnected | The battery is not present. Can also be due to a failing battery which will not charge above approximately 23.8V. |
| Battery Low Fault | Low battery voltage. Only generated during battery test or if the mains power is disconnected. |
| Battery Test Failure | Latched event generated after a Battery Low Fault has been generated. This event must be manually Reset to remove. |
| LED Mimic/WarnSys n Timeout<br>LCD Mimic n Timeout | The LCD/LED mimic (or Warning System amplifier) has not responded to commands sent by the master PCB. |
| LED Mimic/WarnSys n Extra<br>LCD Mimic n Extra | There are more devices detected on the RS485 mimic bus than are programmed into the configuration. |
| LED Mimic/WarnSys n Disp Fault | There is a fault in the LED mimic display board hardware. |
| LED Mimic/WarnSys n Interlock<br>LCD Mimic n Interlock | The interlock circuitry on the relevant mimic is off-normal. |
| LED Mimic/WarnSys n Ext Fault | The External Fault input on the mimic is active |
| LED Mimic/WarnSys n Fault | Some fault condition other than the above has occurred on the mimic. |
| Main LCD Timeout | The primary LCD display board is not responding. |
| Registration Data Fault | The onboard ID chip is not functioning or has not been correctly initialised at the factory. |
| Network Missing | The Networking option has been enabled, but the network interface card is not responding. |
| Network Lost [IN]<br>Network Lost [OUT] | The network card has lost communication with its neighbours in the indicated direction. |
| Network Duplicate Addr | The attached network card shares the same network address as another card on the system. |
| Network Earth Fault | The network card has detected an earth fault condition. |
| Network Config Error | The network card has a configuration mismatch of some kind. |
| Network Panel Type Error | The network card is expecting a different (not ***F120A***) panel type to be connected. |
| Network Error | A fault has been detected elsewhere on the network. |
| FanCtrl xxx FAULT-StartFail | A Fan Control Block has not detected its associated fan running (Status) signal in time after triggering its Start output. |
| FanCtrl xxx FAULT-StopFail | A Fan Control Block's associated fan running (Status) signal has remained active for too long after triggering its Stop output. |
| [COM PORT TIMEOUT]<br>RS485 FAILURE !! | Shown on various LCD displays or LCD mimics when there is lost communications from the main PCB. These messages are generated on-board by the display hardware, as they are not receiving data from the panel. |

Table 11.2: LCD System Defect Messages

## 11.3 Loop Device Messages

The list shows all possible messages generated by the devices on the analogue loop.

| Message | Description |
|---|---|
| **ALARM** | Applies to a loop input device – detector, Manual Call-Point, or input module; when the device activates. The alarm may be one of the following:<br>Smoke — either an intelligent smoke detector or a conventional smoke detector activation from a Loop Responder input.<br>Call-Point — either an MCP-type device or a Manual Call-Point activation from a Loop Responder circuit.<br>Heat — thermal detector. |
| Fault | Generally, Faults can be decoded to one of the causes listed below, however for some events this is not possible. An example of a generic Fault is a circuit failure on a monitored relay output circuit. |
| Pre-Alarm | Applies to detectors only. The analogue value being returned is approaching the 'Alarm' level. |
| Double Device | Two loop devices on the same loop have been assigned the same address. |
| Missing | A loop device that has been configured in the system memory is not present on the loop. |
| Extra Device | The loop driver board has detected a device that doesn't exist in the panel configuration. |
| Maintenance Alarm | The loop driver's internal drift compensation has reached its threshold limit - the detector requires cleaning. |
| Type Mismatch | A loop device does not match with the configuration assigned to it in the system memory. |
| Self-Test Fail | A loop device has failed its regular auto test. |
| Alarm Acknowledged | An alarm from a loop device has been acknowledged through the **ACK** push-button on the front panel display. |
| ISOLATE | A loop device has been isolated through the **ISOLATE** push-button on the front panel display or the User Menu. |
| Alarm Reset | A loop device that was in 'Alarm' has been 'Reset' through the **RESET** push-button on the front panel display. |
| Low Fault | Generated by sensing chamber faults in System Sensor detectors |
| High Fault | Generated by sensing chamber faults in System Sensor detectors - this can mean that the chamber is too dirty for the detector's internal drift compensation algorithm to operate. |
| Short Circuit | A monitored relay has a short-circuit. |
| Open Circuit | Generated by open-circuits on either monitored loop relays or modules. |
| Board Reset | A Pertronic Loop Responder has restarted. |
| Supply Fault | There is either a 'Fault' in the detector supply on a Loop Responder, or the external power supply on a Pertronic Loop Relay board is out of range. |
| Isolator Active | The on-board isolator relay on a Pertronic Loop Responder or Relay has activated due to a short-circuit on the loop. |
| AVF Stage 1 | A loop device with AVF enabled has been triggered once and is in the AVF delay period awaiting a second trigger. |
| Input Active | A loop device programmed with no output flags (i.e. one not generating an 'Alarm' event) has activated. |
| Fan Relay Latched | A Pertronic Fan Relay unit has been latched active by its associated Fan Controller unit. |
| Circuit Resetting | A Pertronic Loop Responder circuit is in its self-timed reset phase after receiving a reset command from the panel. |
| Comms Error | Indicates that there is a loop device present at the location, but the data has been corrupted and cannot be interpreted. |
| Manual OFF | A SW3 device has been switched off |
| Manual ON | A SW3 device has been switched on |

Table 11.3: LCD Loop Device Messages

# 12. DETECTORS AND MODULES

## 12.1 Alarm Sensitivity Levels

For each detector, the loop driver has an 'Alarm Level' (AL), which represents the PW4 level that must be reached before the detector is recognised as being in Alarm. Each 'AL' corresponds to a sensitivity level set within the Loop Driver.

The Photo, Ion, and Heat detectors have PW4 levels that vary as the sensor level varies. The Loop Driver can therefore use any value to set as an 'Alarm Level'. Pertronic use this feature to provide a number of sensitivity levels as defined in Table 11.1.

The Laser, Acclimate and Beam have fixed 'Alarm' levels specified by System Sensor – refer to Table 11.1.

## 12.2 Pre-Alarm Sensitivity Levels

Each Detector also has a Pre-Alarm Level. For the Ion, Heat, and Photo detectors, this is calculated as 67% of the difference between the nominal 'Clean-Air' value and the 'Alarm Level'.

For the Laser and Acclimate, the Pre-Alarm is calculated as the 'Alarm Level' Number minus one. (i.e. if Alarm Level 8 is the 'Alarm' level, then the Pre-Alarm level is Alarm Level 7).

There is no Pre-Alarm level for Alarm Level 1 as there is no higher sensitivity.

## 12.3 Drift Compensation on Loop Driver 1 Boards

Smoke detector Drift Compensation is the process of dynamically adjusting the alarm thresholds of a smoke detector to provide a constant sensitivity, regardless of detector contamination over time. Drift Compensation is not performed on Loop Driver II - recent models of System Sensor detectors, except for the Photo, Ion, and Beam have this function built into the detector itself.

In the **F120A**, Loop Driver boards maintain a **Clean-Air** (CA) value for each smoke detector. The CA value represents the "background" level of contamination in the detector chamber caused by dust, etc. This is a very slowly changing value, which tracks the detector's current analogue level over time. The CA value and the detector's sensitivity setting are combined to calculate the detector's **Alarm Level** (AL). This is the analogue value above which an 'Alarm' will be triggered. The AL also determines the 'Pre-Alarm' level for each detector, which is always 80% of the AL.

Drift Compensation on Loop Driver I boards is performed only on the Photo, Ion, and Beam and device types; the intelligent Acclimate, Laser and COPTIR/PTIR devices perform internal drift compensation.

Ultimately, the detector becomes so contaminated that the adjustments for the selected sensitivity cannot be maintained, as the detector's alarm level would have to be raised above the saturation level for the detector. For this reason a fixed threshold for the CA is used to determine whether the detector has reached a contamination level that requires the head to be cleaned and/or replaced.

Figure 12.1: Drift Compensation Overview shows the relationship between the 'Alarm' level, the 'Clean-Air' level and the internal 'Maintenance Fault' threshold over time.

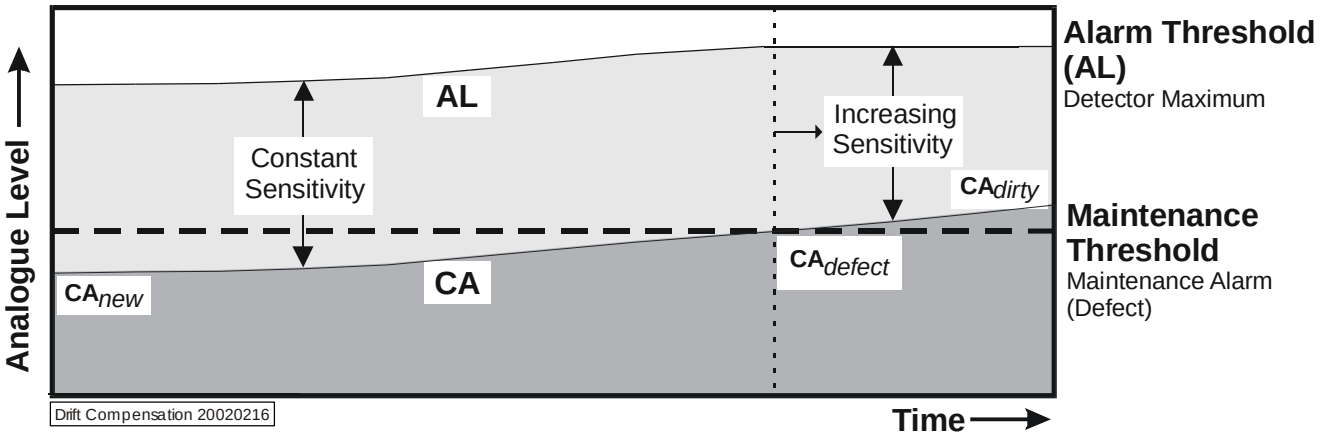


Figure 12.1: Drift Compensation Overview

The desired sensitivity is maintained (represented by the constant distance between CA and AL) until the CA value crosses the fixed Maintenance threshold. The AL value is frozen and the detector sensitivity increases. However, the **F120A** now sets a **Maintenance Alarm** condition for the detector, indicating that it requires cleaning or possibly replacement. Maintenance events can be filtered according to the panel's Diagnostic settings as outlined in Section 9.7.7.

## 12.4 Maintenance Level

All detectors, whether Drift Compensated or not, arrive at a point where the chamber becomes so dirty that there is a significant increase in detector sensitivity. Before this state is reached, a 'Maintenance Alarm' event is generated.

Detectors with internal Drift Compensation generate a maintenance signal internally, but for Photo, Ion, and Beam detectors, the Loop Driver tracks the PW4 value to determine if it has drifted from the normal operating range.

Smoke detector PW4 values are sampled and averaged over time to calculate the 'Clean-Air' (CA) value and determine whether a 'Maintenance Alarm' exists. The CA value represents the long-term baseline detector level under 'Normal' conditions. The CA level slowly tracks the PW4 value of the detector, so is immune to any transient conditions affecting the device. CA is averaged and adjusted every 24 hours.

At Loop Driver start-up, or after a missing detector condition has been restored, the CA value assumes the value of PW4 after the detector has reached a stable level - 60s after detector power-up.

Laser, Acclimate and COPTIR detectors have internal drift compensation. This provides a steady PW4 level, even when the detector is nearing its compensation limit. When the PW4 value exceeds its drift limit, the detector abruptly changes its PW4 value to a predetermined level to indicate that maintenance is required. This method has the disadvantage that the service agent does not know how dirty a detector is by looking at its PW value. There is no method for predicting when a detector will fail.

Heat Detectors do not have a maintenance level, as their PW4 can drift beyond the 'Normal' range due to normal ambient temperature fluctuations.

## 12.5 Low Fault Signal

PW4 may drift below the 'Normal' operating range raising a 'Low Fault' when it drops below 10% of the 'Normal' range. This is not a maintenance fault, as a low PW4 usually signifies a faulty, not a dirty detector.

## 12.6 Selecting Detectors for Maintenance

Selecting the detectors to clean depends upon a number of factors:

a. the sensitivity at which a particular detector is configured – the higher the sensitivity, the lower the Alarm level and the sooner and more often the detector must be cleaned
b. the 'Clean Air' value of the detector as measured by the F120 – the higher the CA value, the sooner the detector should be cleaned
c. the relative 'cleanliness' of the area in which the detector is installed – the 'dirtier' the area, the sooner and more often the detector must be cleaned

From the F120 menu select: STATUS, then ACK

```
Status for Device: L01D001 (OPT)
Loc:
Current=1296, CA=1200, AL=2000
State: NORMAL
```

Current = 1296 - the 'live' value returned by the photo detector
CA = 1200 - the mean 'Clean-Air' value calculated during the preceding 24 hour period
AL = 2000 - the value which is required to activate the detector into 'Alarm'.

The 'Maintenance' level of a detector with AL=2000 (Sensitivity = 0) is 1328 – refer to

| | | | | | | | |
|---|---|---|---|---|---|---|---|
| **FAAST** [2] **(8251BPI)** | +1 | 752 - 848 | ≤150 | NA | NA | ≥1280 | Alert [4] |
| | 0 | | | | NA | ≥1648 | Action 1 [4] |
| | -1 | | | | NA | ≥1968 | Action 2 [4] |
| | -2 | | | | NA | ≥2400 | Fire 1 [4] |
| | -3 | | | | NA | ≥2784 | Fire 2 [4] |
| | | | | | | | |

Table 12.1: Detector Sensitivity Table.

| Sensitivity | AL | CA | Maintenance | Contamination |
|---|---|---|---|---|
| 0 | 2000 | 1200 | 1328 | 75.8% |
| -1 | 2192 | 1200 | 1424 | 64.1% |
| -2 | 2496 | 1200 | 1568 | 52.1% |

As a rule, clean all detectors whose 'Clean-Air' value is greater than 1200

## 12.7 Detector Sensitivity Table

Table 12.1 provides a guide to the detector sensitivity configured and the actual level required to generate an 'Alarm'.

| TYPE | LEVEL | NORMAL | LOW DEFECT | MAINTENANCE | PRE-ALARM (for CA = 800) | ALARM | | |
|---|---|---|---|---|---|---|---|---|
| | | PW4 (µs) | PW4 (µs) | PW4 (µs) | PW4 (µs) | PW4 (µs) | Obscuration/ Temperature | |
| | | | | | | | %ft | %m |
| **Photo (2251BPI)** | +1 | 528 - 976 | <480 | ≥1168 | >1328 | ≥1600 | 1.3%ft | 4.3%m |
| | 0 | | | ≥1328 | >1600 | ≥2000 | 1.9%ft | 6.2%m |
| | -1 | | | ≥1424 | >1728 | ≥2192 | 2.2%ft | 7.2%m |
| | -2 | | | ≥1568 | >1936 | ≥2496 | 2.7%ft | 8.9%m |
| **Ion (1251BPI)** | +1 | 688 - 1184 | <480 | ≥1296 | >1456 | ≥1792 | | |
| | 0 | | | ≥1392 | >1600 | ≥2000 | | |
| | -1 | | | ≥1472 | >1696 | ≥2144 | | |
| | -2 | | | ≥1536 | >1792 | ≥2288 | | |
| | -3 | | | ≥1648 | >1936 | ≥2496 | | |
| **Thermal: Fixed (5251BPI)** | +1 | 832 - 1408 (10 - 35°C) | <400 | none | >1600 (40°C) | ≥1888 | 58°C | |
| | 0 | | | | >1832 (50°C) | ≥2000 | 63°C | |
| | -1 | | | | >2192 (65°C) | ≥2448 | 80°C | |
| | -2 | | | | >2464 (75°C) | ≥2640 | 87°C | |
| **Thermal: ROR (5251RBPI)** | +1 | >832 - 1408 (10 - 35°C) | <400 | none | >1600 (40°C) | ≥1888 | 58°C | |
| | 0 | | | | >1832 (50°C) | ≥2000 | 63°C | |
| | -1 | | | | >2192 (65°C) | ≥2448 | 80°C | |
| | -2 | | | | >2464 (75°C) | ≥2640 | 87°C | |
| **5551 / 5551R** | ONLY USE Sensitivity = 0 | | | | | | | |
| **- Slow ROR** | - these temperatures represent the operating temperature if the Rate of Rise (ROR) of heat is slow | | | | | | | |
| **- Fast ROR** | - if the Rate of Rise (ROR) of heat is fast, the effective operating temperature may be lower | | | | | | | |
| **Beam 6500S / 6200** | -1 | 720 - 1423 | ≤480 | ≥1424 | NA | ≥2192 | Detector can be set for 25% to 50% obscuration. | |
| **Acclimate [2] (2251TMBPI)** | +1 | 752 - 848 | ≤192 | 240 - 352 | NA | ≥1280 | 1%ft | 3.3%m |
| | 0 [1] | | | | >1280 | ≥1648 | 1 - 2%ft | 3.3 – 6.6%m |
| | -1 | | | | >1648 | ≥1968 | 2%ft | 6.6%m |
| | -2 [1] | | | | >1968 | ≥2400 | 2 – 3.5%ft | 6.6 – 11.5%m |
| | -3 | | | | >2400 | ≥2784 | 3.5%ft | 11.5%m |
| | -4 | | | | | ≥3200 | 63°C [3] | |
| **COPTIR (2251CTLE) PTIR (2251TLE)** | +1 | 760 - 840 | ≤192 | 240 – 352 | NA | ≥1280 | 1%ft | 3.3%m |
| | 0 | | | | >1280 | ≥1648 | 2%ft | 6.6%m |
| | -1 | | | | >1648 | ≥1968 | 3%ft | 9.8%m |
| | -2 | | | | >1968 | ≥2400 | 3%ft | 9.8%m |
| | -3 (COPTIR) | | | | >2400 | ≥2784 | 4%ft | 13.1%m |
| | -3 (PTIR) | | | | >2400 | ≥2784 | 3%/ft | 9.8%/m |
| | -4 | | | | | ≥3200 | 60°C [3] | |
| **Laser [2] Pinnacle (7251)** | +3 | 864 - 928 | ≤192 | 240 - 688 | NA | ≥1280 | .02%ft | 0.07%m |
| | +2 | | | | >1280 | ≥1440 | .03%ft | 0.1%m |
| | +1 | | | | >1440 | ≥1728 | .05%ft | 0.16%m |
| | 0 | | | | >1728 | ≥1840 | .10%ft | 0.33%m |
| | -1 | | | | >1840 | ≥2046 | .20%ft | 0.66%m |
| | -2 | | | | >2046 | ≥2288 | .50%ft | 1.6%m |
| | -3 | | | | >2288 | ≥2512 | 1.0%ft | 3.3%m |
| | -4 | | | | >2512 | ≥2640 | 1.5%ft | 4.9%m |
| | -5 | | | | >2640 | ≥2928 | 2.0%ft | 6.6%m |
| **FAAST [2] (8251BPI)** | +1 | 752 - 848 | ≤150 | NA | NA | ≥1280 | Alert [4] | |
| | 0 | | | | NA | ≥1648 | Action 1 [4] | |
| | -1 | | | | NA | ≥1968 | Action 2 [4] | |
| | -2 | | | | NA | ≥2400 | Fire 1 [4] | |
| | -3 | | | | NA | ≥2784 | Fire 2 [4] | |
| | | | | | | | | |

Table 12.1: Detector Sensitivity Table

Notes: 1) the actual sensitivity of the Acclimate detector at levels 0 and -2 is determined by the internal algorithms of the detector itself. In “noisy” environments the actual sensitivity decreases towards the lower sensitivity in the range (higher %/m value), and in “quiet” environments the higher sensitivity (lower %/m) is used.

2) for the intelligent detectors (Acclimate, Pinnacle & FAAST), the detector outputs a set of fixed, discrete levels for each sensitivity setting. Pre-alarm condition is determined by looking for an active level at the next-highest setting.

**There is no Pre-Alarm warning available on the highest sensitivity level, therefore it is recommended that detectors are not ‘Brigade Calling’ at the highest sensitivity level.**

3) At the lowest sensitivity (-4), the Acclimate, COPTIR and PTIR are Heat only detectors.

4) See 12.9 below.

## 12.8 COPTIR/PTIR Sensitivity Table

The COPTIR is a multi-criteria detector comprising Carbon Monoxide (CO), photoelectric, heat and infra-red sensors which function as a single unit. Advanced algorithms provide a detector, which can be configured using different sensitivity settings to quickly respond to actual fires but have high immunity to nuisance alarms within different environments.

The PTIR is also a multi-criteria detector, similar to the COPTIR except for omission of the CO cell and actual smoke sensitivities.

Table 12.2 summarises the principal properties of the COPTIR and PTIR at the 6 available sensitivity settings.

| | Sensitivity | Photoelectric Sensitivity | CO** | Photo Delay | False Alarm Resistance |
|---|---|---|---|---|---|
| **COPTIR (2251CTLE)** | +1 | High | >45ppm | None | Low |
| | 0 | Medium | | None | Medium |
| | -1 | Low | | None | Standard |
| | -2 | Low | | Up to 10 min | High |
| | -3 | Low | | Up to 10 min | Very High |
| | -4 | Heat Only | | | Very High |
| **PTIR (2251TLE)** | +1 | High | | None | Low |
| | 0 | Medium | | None | Medium |
| | -1 | Low | | Up to 45s | Standard |
| | -2 | Low | | 45s to 90s | High |
| | -3 | Low | | > 90s | Very High |
| | -4 | Heat Only | | | Very High |

Table 12.2: COPTIR/PTIR Properties

## 12.9 FAAST Sensitivities

The FAAST has 5 named alarm threshold values that are locally assigned to the device via the PipeIQ configuration software as follows:

| Alarm Level | Default Threshold %/ft | Programmable Range %/ft | Default Threshold %/m | Programmable Range %/m |
|---|---|---|---|---|
| Alert | 0.012 | 0.00046 – 6.25 | 0.0396 | 0.0015 – 20.5 |
| Action1 | 0.050 | 0.00046 – 6.25 | 0.165 | 0.0015 – 20.5 |
| Action2 | 0.100 | 0.00046 – 6.25 | 0.33 | 0.0015 – 20.5 |

| | | | | |
|---|---|---|---|---|
| Fire1 | 0.250 | 0.00046 – 6.25 | 0.825 | 0.0015 – 20.5 |
| Fire2 | 0.500 | 0.00046 – 6.25 | 1.65 | 0.0015 – 20.5 |

When disabled or isolated via the FAAST's local control panel, the FAAST PW4 value changes to a value between 150 and 300µs. This is indicated on the **F120A** display as a "Disabled/Isolated" state.

## 12.10 Actuating Devices

A list of addressable devices that may be connected to the **F120A**:

System Sensor 1251BPI Analogue Addressable Ionisation Smoke Detector.

System Sensor 2251BPI Analogue Addressable Photoelectric Smoke Detector.

System Sensor 2251TMBPI Analogue Addressable Acclimate™ Smoke/Heat Detector.

System Sensor 2251TLE Analogue Addressable PTIR™ Photo Smoke, Heat and IR Detector.

System Sensor 2251CTLE Analogue Addressable COPTIR™ Smoke, Heat, CO and IR Detector.

System Sensor 5251BPI Analogue Addressable Fixed Temperature Heat Detector.

System Sensor 5251RBPI Analogue Addressable Rate-of-Rise Heat Detector.

System Sensor 7251 Analogue Addressable Pinnacle™ Laser Detector.

System Sensor 6200 Intelligent Reflected Beam Detector

System Sensor BEAM200 Intelligent Reflected Beam Detector

System Sensor FAAST Aspirated Smoke Detector

System Sensor M500KAC Analogue Addressable Manual Call-Point.

System Sensor M500MB Analogue Addressable Monitor Module.

System Sensor M501MB Analogue Addressable Monitor Module (Miniature).

System Sensor M503 Analogue Addressable Monitor Module (Micro, with LED).

System Sensor M500DMR Analogue Addressable dual Input, dual Output Module

System Sensor M512ME Analogue Addressable Conventional Interface Module.

Pertronic F100LR Analogue Addressable 8-Circuit, 1-Relay Loop Responder.

## 12.11 System Modules

System Sensor M500C and M500CH Control Module.

System Sensor M500X Zone Isolator Module.

System Sensor B224RB Relay/Detector Base.

System Sensor B224BI Isolator/Detector Base (obsolete).

System Sensor B524IEFT-1 Isolator/Detector Base.

System Sensor DBS24ALW Addressable Sounder Base.

Pertronic F100LPR Addressable 4-Way Relay Responder.

Pertronic F100PFCU Fan Control Unit.

Pertronic F100PFCR Fan Control Relay.

# 13. LOOP DRIVER COMPATIBILITY

The 2-loop extension board currently available (F120P2LMB) is the second generation of the **F120A** loop driver. There are both hardware and firmware differences between the two versions, as outlined below.

## 13.1 Hardware Differences

The principal difference between the two versions of the board is that the v2 board is approximately 2/3 of the length of the v1 board. The new board still fits on the standard panel, but foregoes the right-hand mounting points used on the old board.

The second major difference is that the v2 board is designed with the option to provide isolated loops. Usually, the Loop Driver board is powered from the panel power supply, however if the system loop wiring results in crosstalk between loops on different loop drivers (for example, if building wiring must be re-used in a retrofit situation or screened cable has been used in a 'high noise' environment), the option exists to fit a DC:DC Converter and operate the Loop Driver from an isolated supply.

Loop Driver II uses a 4-way communications connector instead of the 10-way connector on the v1 board, but a simple conversion cable allows v2 boards to be added to a predominantly v1-equipped system.

### 13.1.1 Conversion to Isolated Loop Driver

Because all communications interfaces between v2 boards use optically isolated connections, all that is required to isolate the loop driver from its neighbours is a separate 24Vdc, 0.7A (or greater) power connection (24Vdc:24Vdc Converter: PB12H-2424F).

To convert a Loop Driver from operating off the panel power supply to operating from an isolated supply:

a) retain the connection of the panel power supply to connector K6/K11

b) remove two links: LK1 and LK2

c) insert a 24Vdc:24Vdc Converter or isolated 24Vdc Power Supply connected to K10

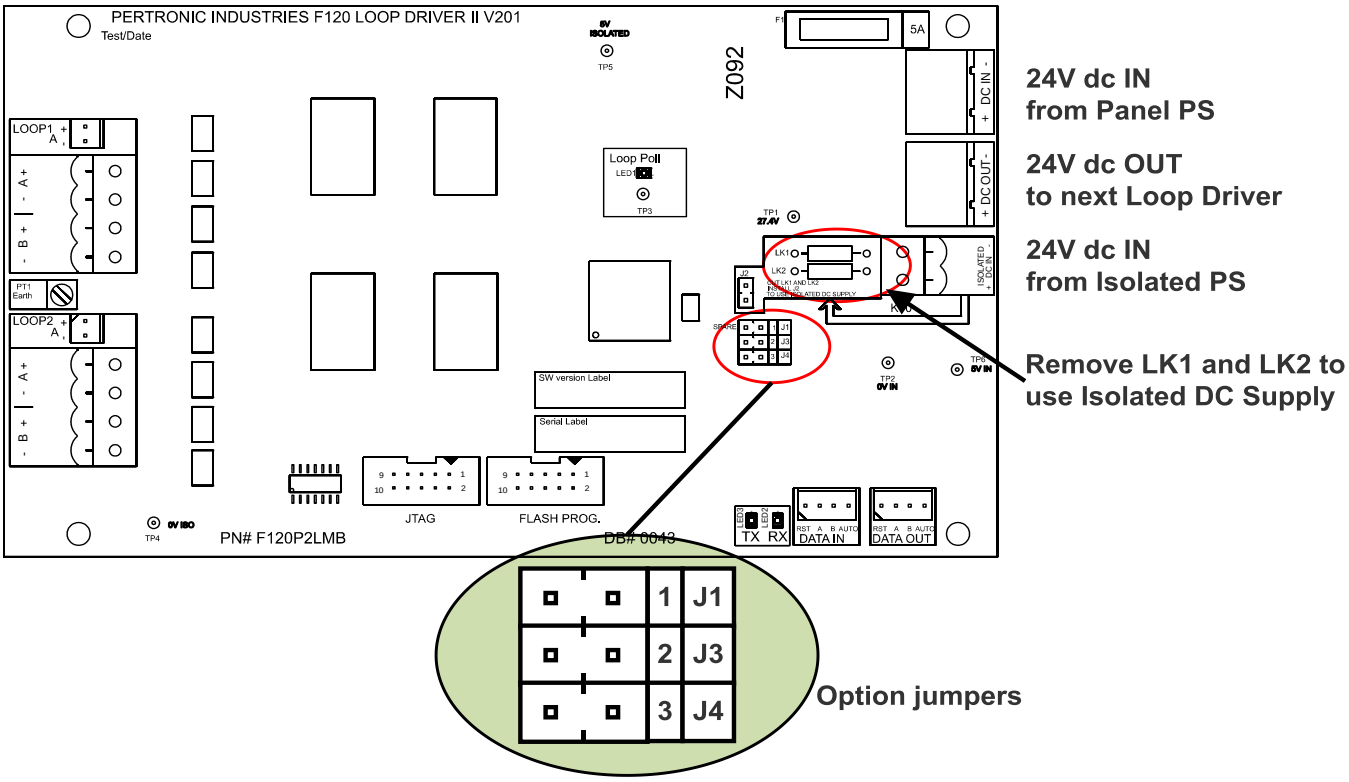


Figure 13.1: Isolated Loop Driver Board

## 13.2 Firmware Differences

The main difference between the 2 generations of Loop Driver is the firmware.

All of the basic functionality of the **F120A** is common to both versions, so in general there are no problems with compatibility using a mix of the two. However, newer panel features will only be supported on Loop Driver II.

### 13.2.1 F120 Feature Variation

A summary of the **F120A** features affected by the changes is:

| | Virtual Detectors | Detector LED Mapping | Duct Detector Mapping | Brigade Latch | Drift Compensation |
|---|---|---|---|---|---|
| Loop Driver 1 (pre-v1.50A) | NO | NO | NO | NO | YES |
| Loop Driver 1 (v1.50A & later) | NO | YES | YES | YES | YES |
| Loop Driver 2 | YES | YES | YES | YES | NO |

| | Virtual Detectors | Detector LED Mapping | Duct Detector Mapping | Brigade Latch | Drift Compensation | Day/Night Mode |
|---|---|---|---|---|---|---|
| **LD1 (<v1.50)** | NO | NO | NO | NO | YES | NO |
| **LD1 (≥v1.50)** | NO | YES | YES | YES | YES | NO |
| **LD2 (<v2.12)** | YES | YES | YES | YES | NO | NO |
| **LD2 (≥v2.12)** | YES | YES | YES | YES | NO | YES |

Table 13.1: Loop Driver Firmware Differences

Note that “Duct Detector Mapping” refers to the use of the hardware FANC & FANR loop devices; the software-controlled Fan Control Blocks support this function directly.

### 13.2.2 Variation of Isolation Status

The behaviour of loop devices when isolated is handled differently by the two Loop Drivers:

| Loop Driver II | Loop Driver I |
|---|---|
| When any Detector or MCP is isolated (either individually or via Zone isolate), the device's LED turns OFF.<br>If a device is isolated but activates into ‘Alarm’, the LED remains OFF. | The LEDs of activated devices remain ON, whether isolated or not. |

Table 13.2: Loop Driver II / I Isolation Variation

# 14. ORDERING INFORMATION AND SPARE PARTS

## 14.1 Pertronic Panels

| Item | Part Number | Notes |
|---|---|---|
| F120A, basic Two Loop system in 0.75m rack cabinet | F120A19 | Includes: two analogue addressable loops (one F120P2LMB), main PCB, 40 x 4 alphanumeric display, PSU and all internal wiring, with Fire-Fighter Facility |
| F120A in 0.9m cabinet | F120AAUS900 | As above, except 900 x 450 x 130 |
| F120A in 1.2m cabinet | F120AAUS1.2 | As above, except 1200 x 450 x 130 |
| F120A in 1.8m Rack Cabinet | F120AAUS1.8 | As above, except 1800 x 450 x 130 |
| F120A 2-Loop Extender PCB (v2) | F120P2LMB | Up to 10 in total (20 loops) |
| 24Vdc:24Vdc, 15W Converter | PB12H-2424F | Provides DC:DC isolation for isolated Loop Drivers |
| F120A LCD Mimic | F120AMAUS | Contains a 40 x 4 LCD display and Fire-Fighter Facility |
| Pertronic LCD Mini-Mimic | F100AMM | Alarm-only display (40 x 2 lines) |
| Pertronic 12-way Smart LED Display PCB | F100PDB12 | 4 global LEDs (Sprinkler, Fire, Fault, Normal) plus 8 zone LEDs. Connected via RS485 serial interface |
| Pertronic LED Address Controller | LAC485 | Controller for 8 way LED, 8 way relay or 48 way open collector boards. Connected via RS485 serial interface |
| Pertronic 8-way LED Display PCB | F100PDB | LED Extension for F100PDB12 |
| Pertronic 8 Way Alarm, Fault and Isolate display PCB | AFI-8WAY | AFI LED Extension for LAC485 |
| Pertronic 8 Way Common Relay PCB | PC8WCOMR | Relay Extension for LAC485 or F100PDB12 |
| Pertronic 48 Way open collector PCB | PC48WOCOU | Open collector extension for LAC485 or F100PDB12 |
| Pertronic Amplifiers | EVAC50W24V<br>EVAC20W24V | 50W, 24V Amplifier<br>20W, 24V Amplifier |

## 14.2 Addressable Loop Devices

| Item | Part Number | Notes |
|---|---|---|
| Ionisation Detector | 1251BPI | Uses B501 Base |
| Photoelectric Detector | 2251BPI | Uses B501 Base |
| Photoelectric + Heat Detector (Acclimate™) | 2251TMBPI | Multi-criteria fire detector, uses B501 base |
| COPTIR | 2251TLE | Multi-criteria with CO, Photo, Thermal, and IR sensors **(Max 99 addresses per loop)** |
| Fixed Heat<br>Rate-of-rise Heat Detector | 5251BPI<br>5251RBPI | Fixed Heat<br>ROR, with fixed temperature |
| Laser Detector (Pinnacle™) | 7251AUS | Very high sensitivity smoke detection<br>**(Max 99 addresses per loop)** |
| Reflected Beam Detector | BEAM200 | Uses projected light beam for large-area smoke detection |
| FAAST Aspirated Smoke Detector | 8251BPI | Advanced aspirating smoke with wide sensitivity range & large area monitoring. |
| Monitor Modules | M500MB | Fits SMB 500 mounting box |
| Monitor Modules | M503 | Miniature input module with LED output |
| Conventional Interface Module | M512ME | Conventional zone interface, fits SMB500 |
| Control Module | M500CH | Relay with EOL monitoring or clean contacts |
| Zone Isolator Module | M500X | Short-circuit protection for analogue loop sections |
| Detector Bases | B501 | Required for all detectors except where noted |
| Isolator Base | B524IEFT-1 | Short circuit isolator detector base |
| Addressable Sounder Base | PSBAS2220 | Loop-powered sounder base. AS2220 compliant |
| Pertronic Analogue Addressable 4-Way Relay Responder (Monitored and non-monitored contacts) | F100LRU<br>F100LRU+C | board only<br>board mounted in case |
| Pertronic Analogue Addressable 8-Input Loop Responder with 1 relay output | F100LR<br>F100LR+C | board only<br>board mounted in case |
| Pertronic Analogue Addressable Manual Call-Point | M500KAC | Manual Call-Point (no backing box) |
| Pertronic Fan Control Unit | F100PFCU | Requires Fan Control Relay |
| Pertronic Fan Control Relay | F100PFCR | Requires Fan Control Unit |

## 14.3 Spare Parts

| Item | Part Number |
|---|---|
| F120A – Main PCB Assembly | F120ZMBAUS |
| F120A – Keyboard/Display assembly (pushbutton switches) | F120LCDAUS |
| F120A – Keyboard/Display MkII PCB (discrete switches) | F120AUSKB-2 |
| F120 2 Loop Driver 2 Mini Board | F120P2LMB |
| Offline PSU, 24V, 4A-3A Continuous | 24/4SWMP |

| Item | Part Number |
|---|---|
| **Previous Models:** | |
| F120 2 Loop Driver 1 Board | F120P2LB |

# 15. INSTALLATION INSTRUCTIONS

Installation of the **F120A** must be performed by suitably qualified personnel.

The following instructions are a guide to the successful installation and commissioning of an **F120A** Fire Alarm system.

### 15.1.1 Pre-Installation Check

Before opening the **F120A** system packaging, inspect the packaging for external damage.

Remove the ***F120A*** from its packaging and inspect the cabinet for external damage.

Check that the cabinet key is attached to the top of the cabinet.

Open the cabinet and visually check that all circuit boards and other components such as the Mains transformer and cabling are firmly in place.

Check that all fuses on the Master PCB, the power supply and other auxiliary PCBs (where applicable) are in place, and have the correct value.

### 15.1.2 Panel Installation and Power Connection

Install the cabinet to its assigned position.

Ensure that **F120A** is clean internally and that no residual contamination, such as metal filings, is present.

Ensure that all monitored outputs, requiring an EOL resistor, are correctly terminated at the panel. (It is assumed that the external loop and other external site wiring have been installed, but not connected to the **F120A**, at this point).

Ensure that all external inductive loads, such as relays, magnetic door holders etc. are fitted with suitable diodes across the inductive load to reduce the effect of back-EMF which can cause damage and/or malfunction by the equipment. The diode should always be fitted at the inductive load end and not at the drive end of the circuit. Pertronic equipment is always supplied with back-EMF diodes already fitted.

Ensure that a detailed plan and address assignment table is available for each loop.

Before connecting the external loops and other external wiring, install the Mains power (240Vac ±10%) - do NOT connect the batteries.

Check that the system is correctly Earthed.

Apply the Mains power to the system, and observe that the **F120A** goes through its initialisation phase - this takes about 30 seconds. Faults will be detected (such as loop faults and battery missing), but ignore these at this stage.

Connect the batteries and reset the system with the **RESET** pushbutton on the **F120A** Master PCB.

### 15.1.3 Loop Device Configuration

Configuration of the loop devices may be performed manually through the keypad, or by using a PC and uploading the configuration data from a file on the PC.

Connect Loop 1, and either Learn (see Section 9.6: Learn - Auto Learn Function), or manually enter the detector, module and relay configuration data through the Engineer's Menu, such that each device on Loop 1 has been configured (when using a PC, just load the data for Loop 1).

Deal with any Faults - for loop or device Faults, investigate the source of the Fault (for example, wrong configuration data, double addressing, etc.), and correct the Fault. For other (system) Faults, locate and deal with these before proceeding.

When Loop 1 has been configured correctly, and no other Faults are present, connect Loop 2 to the **F120A** and repeat the configuration and test process.

Repeat this for other loops as applicable.

Note: The maximum allowable Loop Cable Resistance is 50Ω. A comprehensive Loop Length calculator is available on the Pertronic Industries Pty Ltd website www.Pertronic.com.au and this can be used to confirm that installations are not exceeding maximum limits.

### 15.1.4 Other External Devices

When the loops have been successfully configured and tested, connect and test the sounders connected to relays **WARNING SYSTEM** and **EXTERNAL BELL**.

Connect and test the devices controlled by **ACF**.

Test the operation of the loop relays.

Connect and test any other devices that are a requirement of the system.

Test the system as a complete functional unit, testing all input and output devices.

# 16. MONTHLY TESTING

All testing and maintenance on **F120A** Fire Alarm systems shall be carried out by suitably trained and qualified personnel in accordance with the requirements of relevant Australian Standards.

(a) Open the Fire Alarm control unit cabinet, then operate the appropriate switches to isolate the transmitter and disable the bells.

(b) Check that the voltage across the two 12V sealed lead acid batteries is in the range 27.3 to 27.5Vdc. Note that the float voltage is temperature compensated.

(c) Run Auto Test to check the addressable detectors.

(d) Test all alerting devices and indicators for correct operation. Refer to the particular detector information to determine how to test activate a detector.

(e) Clean detectors with ‘Clean-Air’ values greater than 1200.

- refer to 12.7 for the ‘Maintenance’ and ‘Alarm’ PW4 settings for each type of detector

(f) After completing tests, enter all results into the system logbook.

(g) Ensure that the system is fully reset to ‘Normal’ and restore the isolation buttons and/or switches to ‘Normal’ before closing and locking the cabinet door.

# 17. DIAGRAMS

## 17.1 F120A PCB Layout

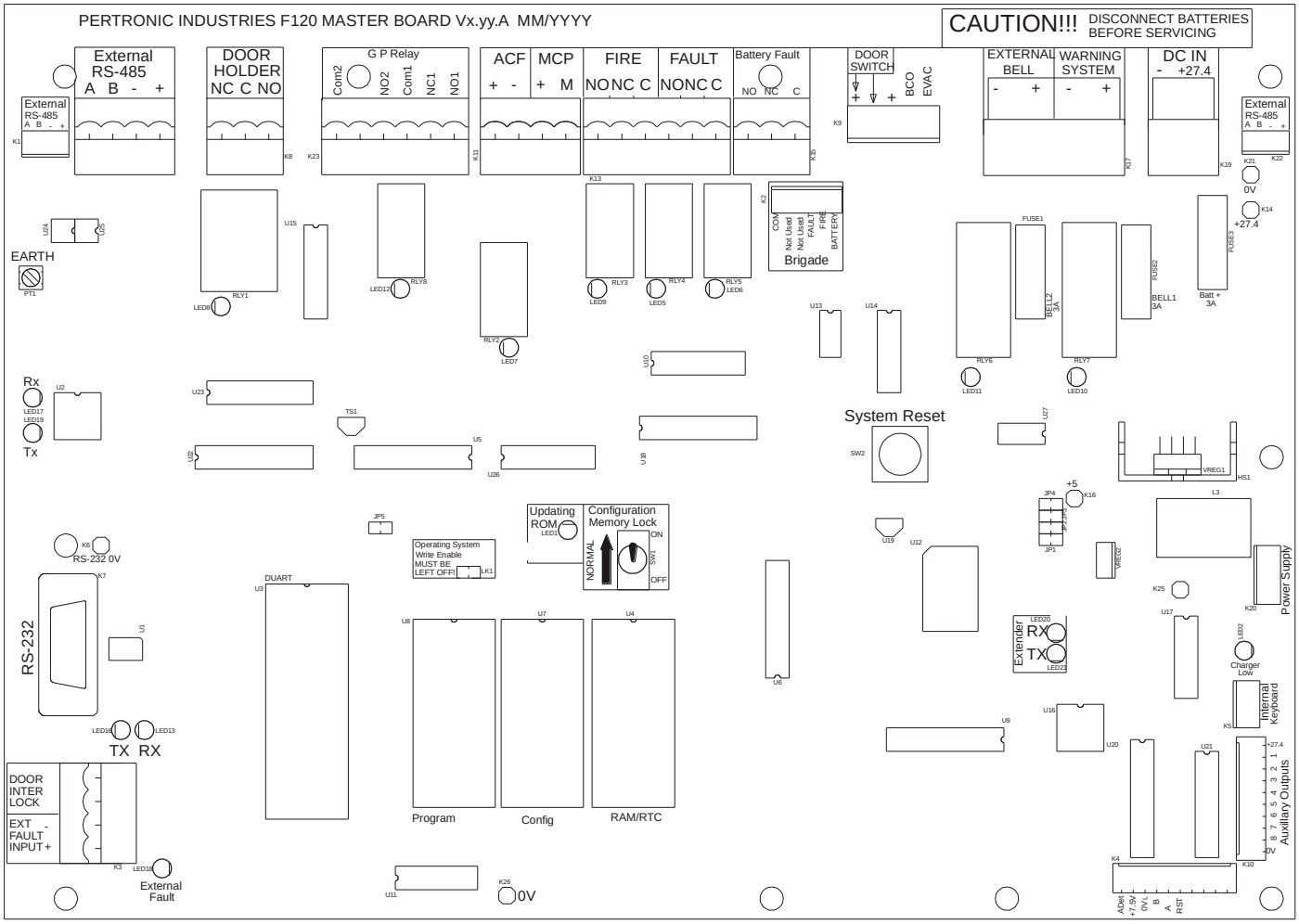


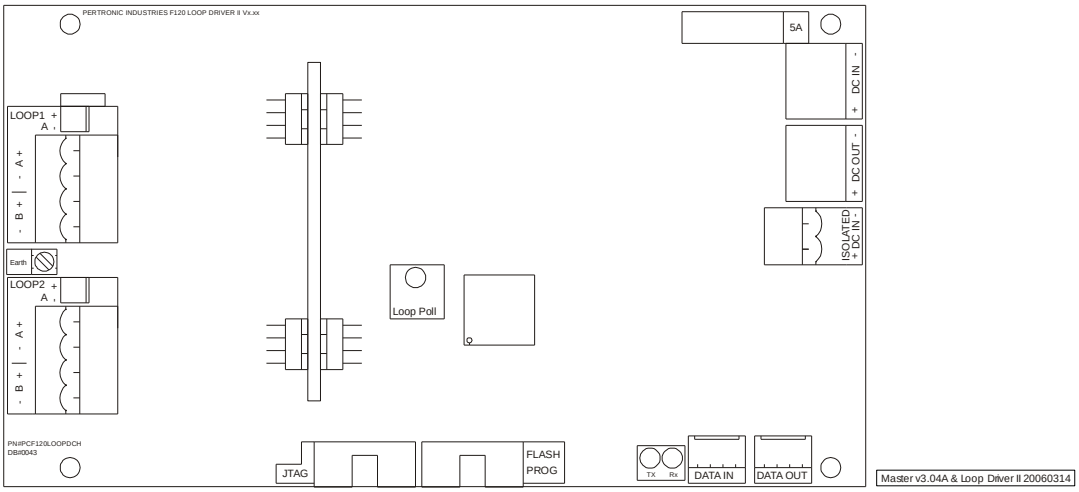


Figure 17 F120A PCB Layout

## 17.2 PCB Access Points

| Connectors | | | |
|---|---|---|---|
| **Component** | **Description** | **Input/Output** | **Note** |
| K1 | Internal RS-485 : Small | I/O | |
| K2 | Brigade | OUT | |
| K3 | Door Interlock; External Fault | IN | |
| K4 | Extender Board | I/O | |
| K5 | Internal Keyboard | IN | |
| K7 | RS-232 | | |
| K8 | 'Door Holder' Relay | OUT | SPDT |
| K9 | Door Switch; Bell Cut-Off; Trial Evacuation | IN | |
| K10 | Auxiliary O/C Outputs | OUT | |
| K11 | Monitored Auxiliary (ACF) and Call-Point (MCP) | IN | |
| K13 | 'Fire' Relay and 'Fault' Relay | OUT | SPDT |
| K15 | 'Battery Fault' Relay | OUT | SPDT |
| K17 | 'External Bell' and 'Warning System' Relay | OUT | |
| K19 | +27.4Vdc Input | Power Supply In | |
| K20 | Power Supply Monitor | IN | |
| K22 | Internal RS-485: Small | I/O | |
| K23 | 'General Purpose' Relay | OUT | DPDT |
| K24 | External RS-485: Large | I/O | |
| PT1 | Earth Terminal | | |

| Switches | |
|---|---|
| **Component** | **Description** |
| S1 | Reset |
| SW1 | Configuration Memory Lock |
| SW4 | ATS Test |

| Jumpers | |
|---|---|
| **Component** | **Description** |
| JP1..JP4 | Reserved for future use |
| JP5 | Reserved – factory test |

| Test Points | |
|---|---|
| **Component** | **Description** |
| K6 | 0V |
| K14 | +27.4Vdc |
| K16 | +5Vdc |
| K21 | 0V |
| K26 | 0V |

| Fuses | | | |
|---|---|---|---|
| **Component** | **Function** | **Rating and Type** | **Replacement Part No.** |
| FUSE1 | External Bell | 3A Blade Fuse | FUBL3A |
| FUSE2 | Warning System | 3A Blade Fuse | FUBL3A |
| FUSE3 | Power Supply | 3A Blade Fuse | FUBL3A |

## 17.3 Detector Wiring

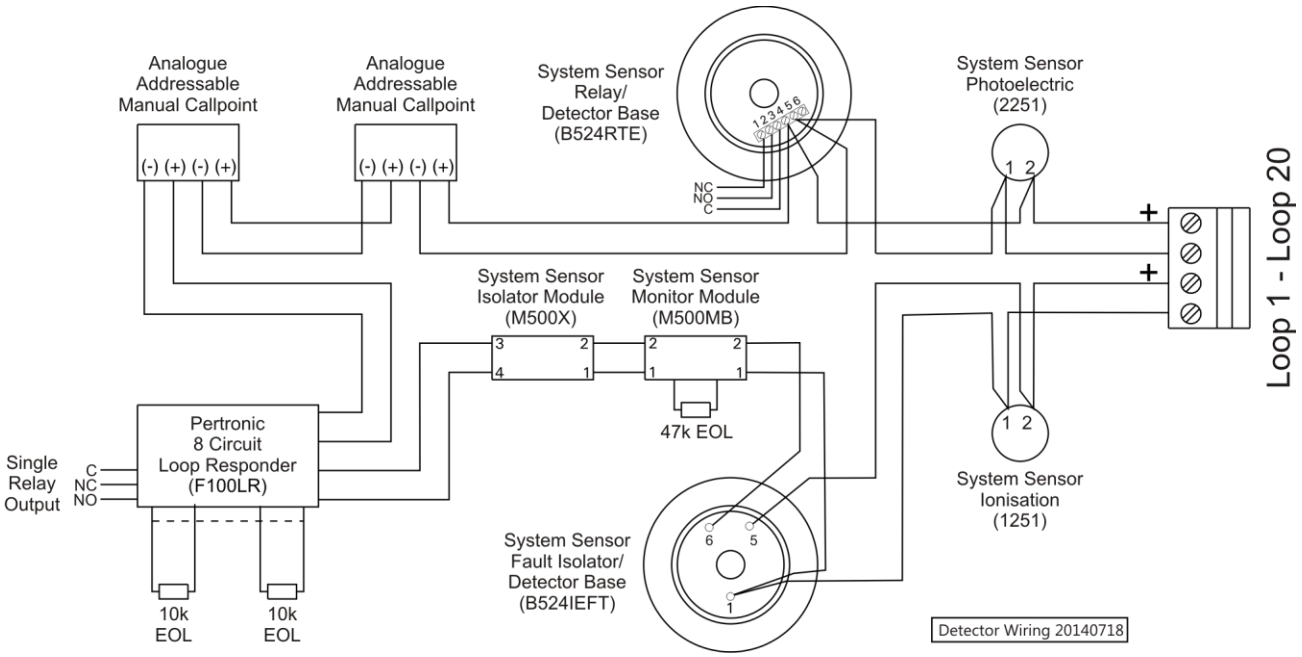


Figure 17.1: Detector Wiring

## 17.4 Bell Wiring

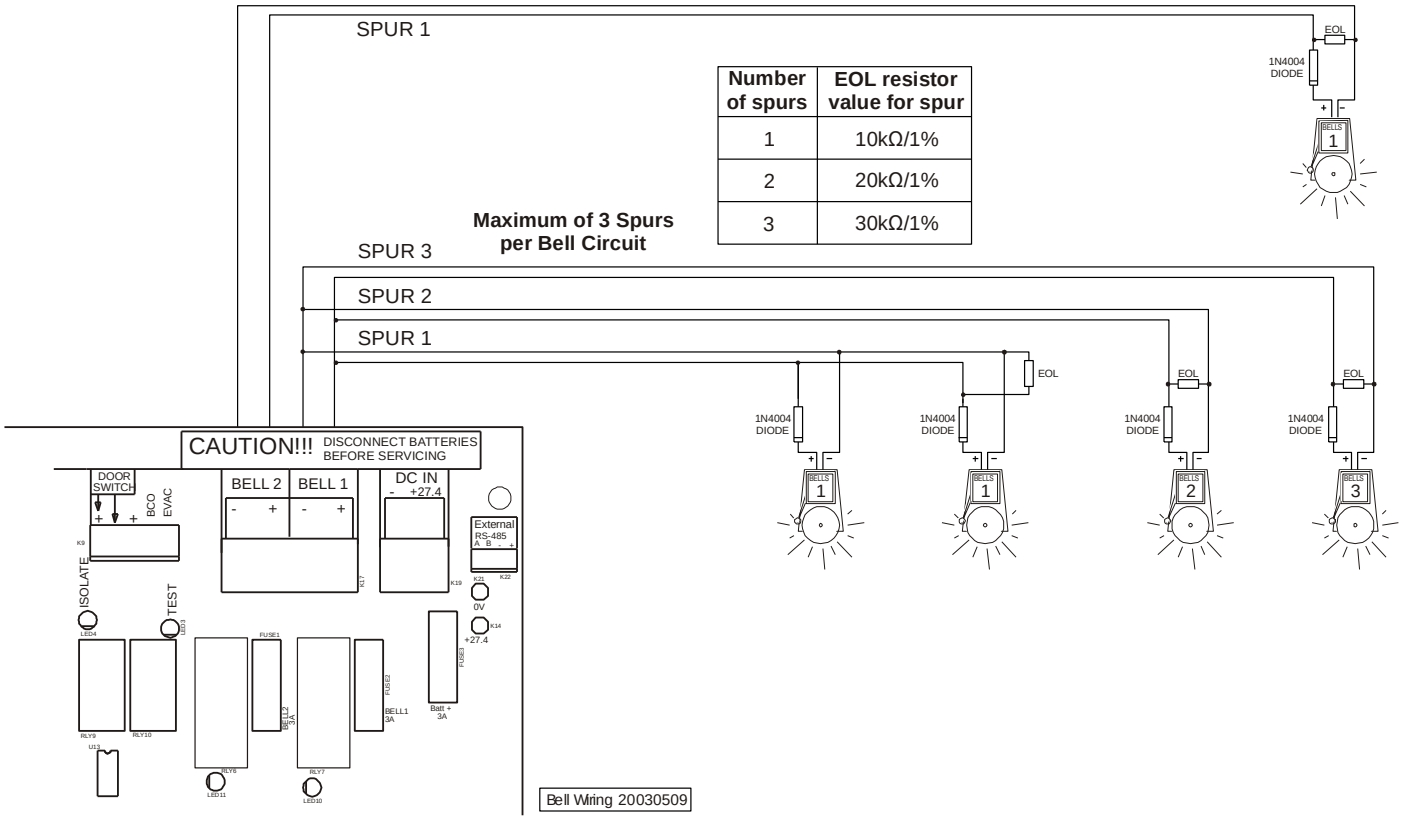


| Number of spurs | EOL resistor value for spur |
|---|---|
| 1 | 10kΩ/1% |
| 2 | 20kΩ/1% |
| 3 | 30kΩ/1% |

Figure 17.2: Bell Wiring

## 17.5 Loop Relay Wiring

**Relays configured as one of:**
**Warning System Relay**
**ACF Relay**
**Door Holder Relay**

**Detector Base relays cannot be configured as Loop relays. These relays are activated when the detector is in the 'Fire' state.**

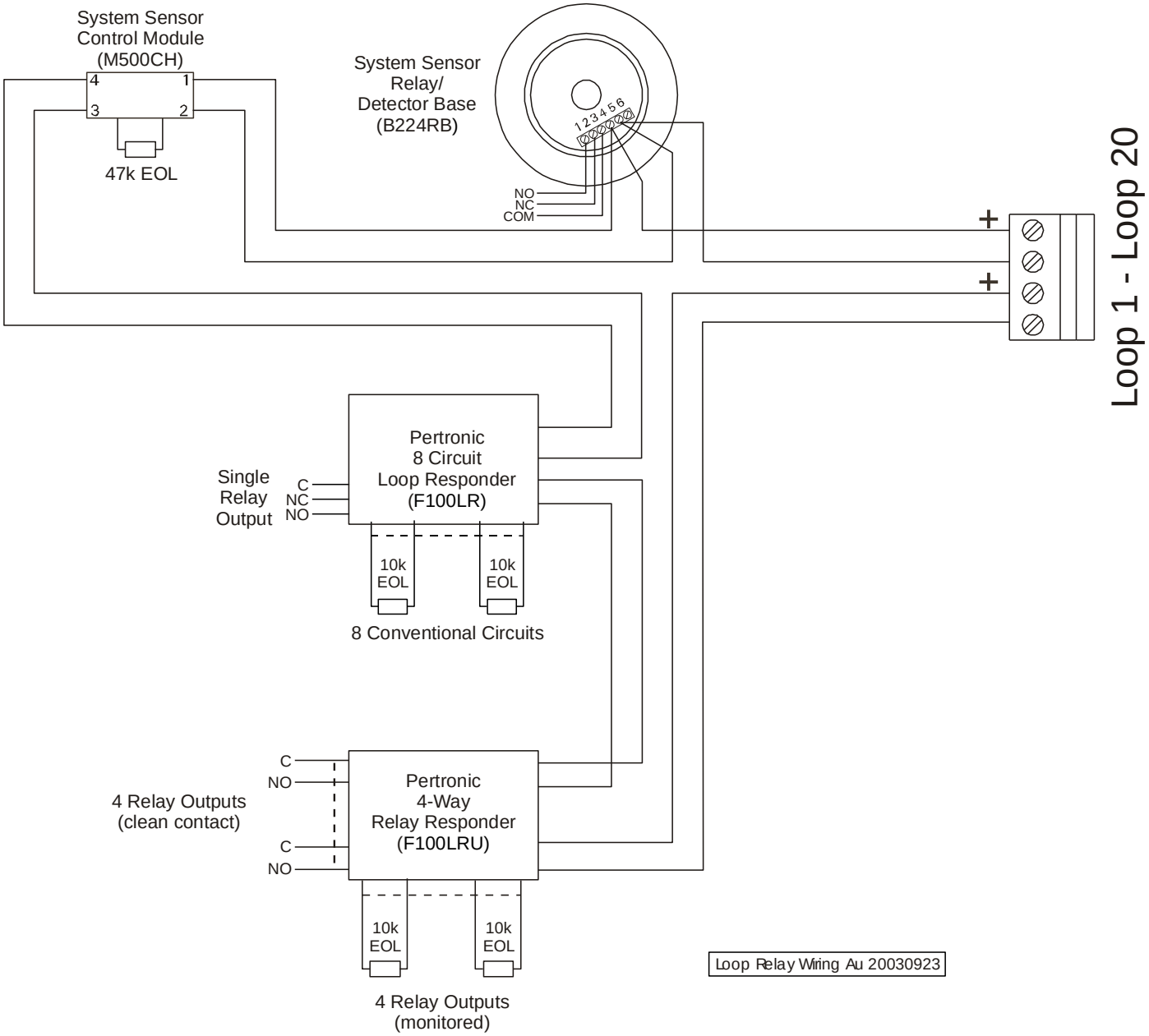


Figure 17.3: Loop Relay Wiring

## 17.6 System Wiring

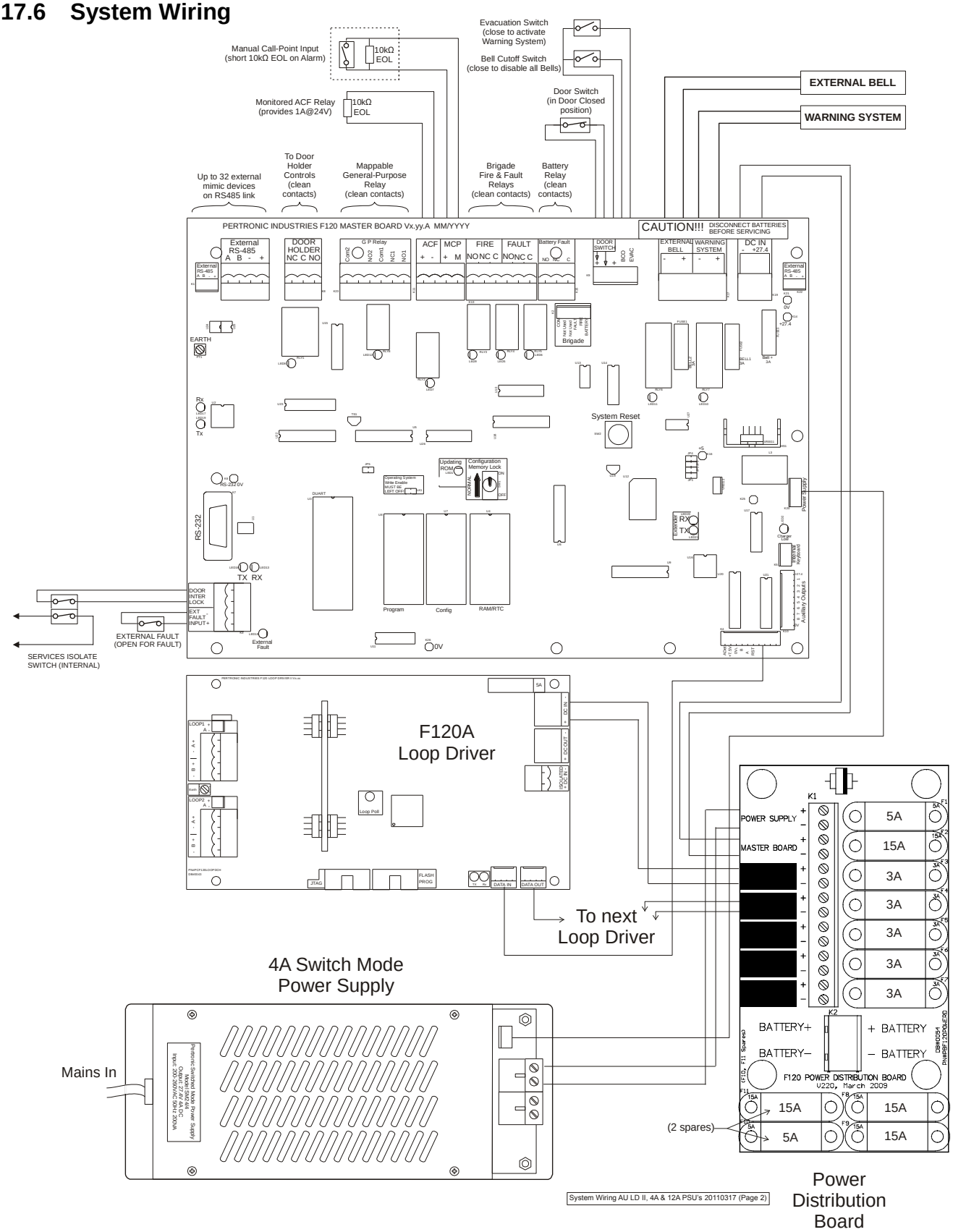


Figure 17.4: System wiring—using 4A Power Supply

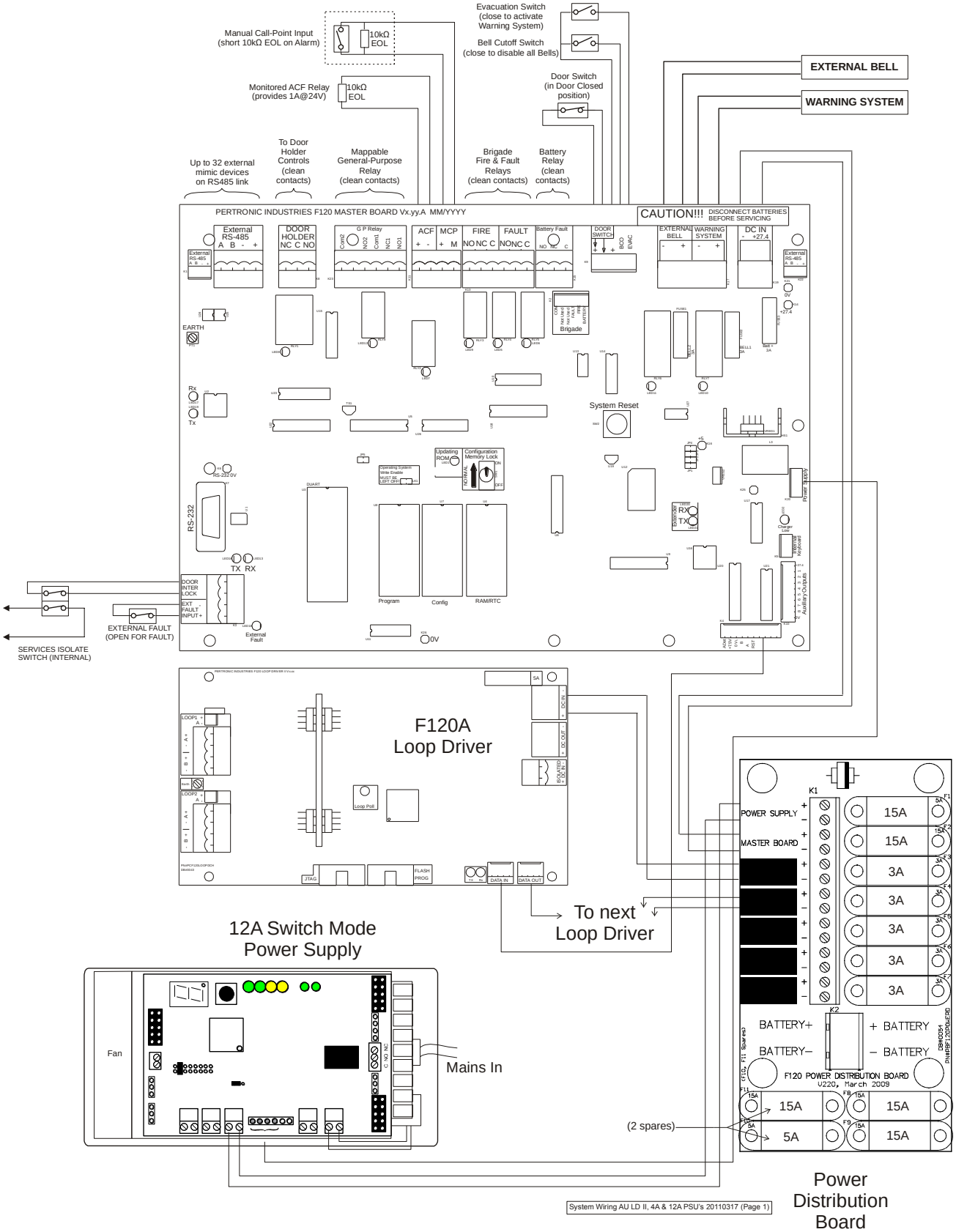


Figure 17.5 System wiring—using 12A Power Supply

Cabinet Dimensions

16U (800mm) 19” Rack Cabinet

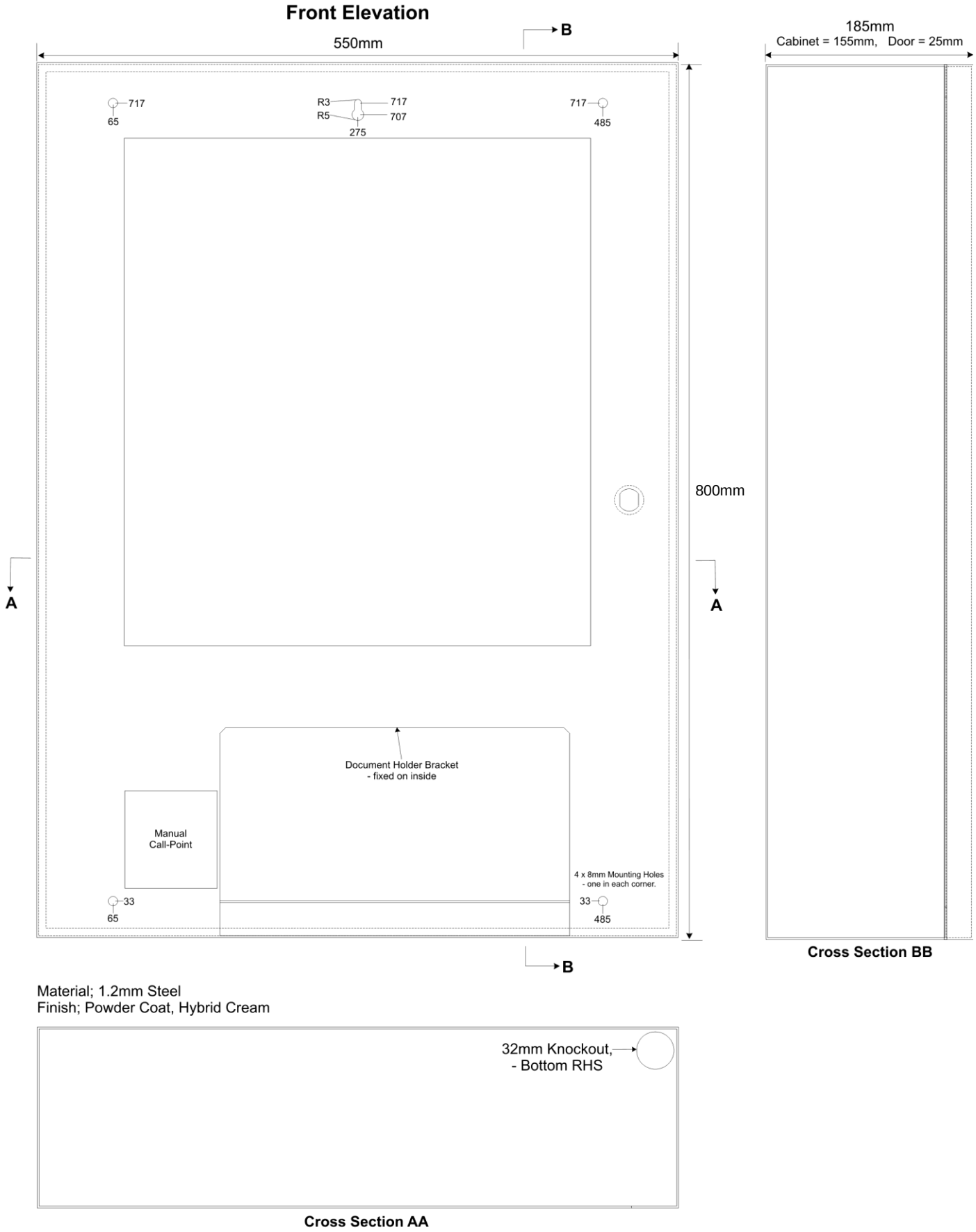


Figure 17.6: Cabinet Dimensions

# Document Change History

| Issue Number | Reason for Update | Description of Changes | Author |
|---|---|---|---|
| Issues 1-6: | History not recorded in this document. | | |
| Issue 7:<br>15 Sep, 2003 | Manual brought up to date with v2.30.00 firmware.<br>Fixed some messages copied over from F100A manual & other factual errors.<br>Formatting improvements; Table & Figure tables added. **(Not released)** | | |
| Issue 7:<br>2 Oct, 2003 | Formatting & changes resulting from Issue 7 proofing. **(Not released)** | | |
| Issue 9:<br>Nov, 2004 | Updates to include new features:<br>- Fan Control Blocks<br>- Brigade Latch flag<br>- Detector LED mapping. **(Not released)** | | |
| Issue 9:<br>19 Jan, 2005 | Updated Detector Sensitivity Table<br>Updates to FCB specification (**Not released)** | Section 9.11.1 updated<br>Sections 5.8.6 and 8.13 and Table 5.3 updated | GeoffT<br>JeremyE |
| Issue 9:<br>10 Mar 2005 | Updates for v3.08.07 firmware<br>**(Not released)** | Section 5.3 updated<br>Sections 5.8.9 & 8.7.4 added | JeremyE |
| Issue 9:<br>21 Apr 2005 | Updates for new loop drivers – drift compensation section now explained in new section 13 on loop driver compatibility.<br>Updated part codes. | Section 9.12 reorganised<br>New section 13 inserted<br>Section 12 updated | JeremyE |
| Issue 9.1:<br>2 Jun 2005 | Added current consumption for all loop driver boards.<br>Updated specification for PSU.<br>Updated System Wiring diagram. | Section 1.2 updated<br>Figure 16.5 updated | JeremyE |
| Issue 9.2:<br>9 June 2005 | Changed BEAM sensitivity to -1 | Section 9.12 updated | JeremyE |
| Issue 9.5:<br>10 Feb 2006 | Increased FCBs to 300<br>Increased LED outputs to 2048 | Section 5.8 updated<br>Section 5.1.1 updated | JeremyE |
| Issue 9.6<br>Mar 2007 | Updates for Isolated Loop Driver II boards.<br>CN 784: amend PW4 levels | Section 1.3: amended Lp Drv II Iq<br>Sections 9, 11 and 13 updated.<br>Section 9.28 updated and moved to Section 5. All Sections 5+ incremented<br>Table 10.2 amended & moved to 12.1 and cross references | GeoffT |
| Issue 10<br>August 2007 | Updates for new v4 features | Section 1: System Overviews<br>Section 3: Initialisation after Upgrade<br>Section 4: minor corrections<br>Section 6: Day/Night mode; Zonal Alarm Acknowledgement Facility<br>Section 9: D/N and AAF Config; Daylight Savings; Systems Diags<br>Section 10: Battery info.<br>Section 14: Part Numbers<br>Daylight Savings; Systems Diags<br>Section 10: Battery info.<br>Section 14: Part Numbers | JeremyE<br>DerekW |
| Issue 11<br>Nov 2008 | Updates for v4.04; corrections | Sections 9.7.3, 9.7.7, 13.2, 15.1.2; Table 12.1 | GeoffT<br>JeremyE |

| Issue Number | Reason for Update | Description of Changes | Author |
|---|---|---|---|
| Issue 11.1<br>Dec 2009 | Updates to detector compatibility tables | Sections 12.7, 12.8; Tables 12.1 and 12.2 | DerekW |
| Issue 11.2<br>Dec 2009 | Corrections | Sections 12.7 and 14.2; Table 12.2. Cabinet dimensions. | DerekW |
| Issue 12<br>Feb 2010 | Change Note #1163 | Section 6.1, Table 6.2<br>Section 6.3, Table 6.3<br>Section 6.9, Figure 6.3, Table 6.11, Table 6.12.<br>Section 8.2, Status Descriptors table | JeremyE |
| Issue 13<br>March 2011<br>(in-progress) | New power distribution board and several wire routing edits.<br>Above changes, but with 12A PSU.<br>Change Note #1354 | Update Figure 17.4<br>Update Figure 17.5<br>References to 1000 or 999 events in log changed to 1000/1999.<br>Log display format change (Sect 8.3)<br>WarnSys Stage 1 config bit & output info added (6.1.15 & 9.7.1)<br>New User/System/Versions menu (8.5.1)<br>Description of Battery Recovery Timer (10.16.1) | DerekW<br>JeremyE |
| Issue 14<br>March 2012 | BZ#3557 | Updated LCD Fault message list in Table 11.2 | JeremyE |
| Issue 15<br>March 2013 | Change Note #1544 | Addition of Zone Offset | JeremyE |
| Issue 16<br>Oct 2013 | Change Note # 1698 | Logic blocks increased to 300<br>Fan Control blocks increased to 400<br>9.7.1 Added SprEvac flag details. | RDB |
| Issue 17 | Change Note #1765 | New FAST device type (System Sensor FAAST detector) added<br>Loop device output qualification (6.1.1 & 9.1.2) added & updated to latest information.<br>LogDHR option added.<br>AVF on types fixed (BZ#4308)<br>Clarified 99 / 159 detectors | JeremyE<br>RDB |