• **Melbourne**

Unit B2
2A Westall Rd
Springvale
VIC 3171
Tel (03) 9562 7577
Fax (03) 9562 8044
sales.vic@pertronic.com.au

• **Sydney**

Unit 19
287 Victoria Rd
Rydalmere
NSW 2116
Tel (02) 9638 7655
Fax (02) 9638 7688
sales.nsw@pertronic.com.au

• **Brisbane**

Unit 3
23 Anthony St
West End
QLD 4101
Tel (07) 3255 2222
Fax (07) 3255 1122
sales.qld@pertronic.com.au

• **Adelaide**

65 Manton St
Hindmarsh
SA 5007
Tel (08) 8340 9533
Fax (08) 8340 9544
sales.sa@pertronic.com.au

www.pertronic.com.au

PERTRONIC
LOOP RESPONDER
TECHNICAL MANUAL
AUSTRALIA

Valid For Loop Responders:
PCB Hardware: v2.31 and greater
PCB Firmware: v4.04 and greater

Issue 6

The contents of this manual are copyright.

This document is to be used only for operating *Pertronic Loop Responder* systems.

This document is not to be reproduced, photocopied or passed in part or whole to a third party without the express, written authorization of Pertronic Industries Pty Ltd

Document Change History

Issue Number	Date	Reason for Update	Description of Changes	Author
Issue 1:				
Issue 2:				
Issue 3:				
Issue 4:				
Issue 5:	Mar, 2005	CN292, Firmware 3.00 CN457, Firmware 4.02	1.PSU Fault reported through all 8 circuits. (2.11: Loop Responder Fault Notification) 2. Open Circuit no longer treated as an alarm (2.3: 'Switch Input' Circuits Mode)	Lewis Liu
Issue 6:	Jan, 2006	CN620, Firmware 3.04	Section 3: 3k3Ω or 4k7Ω End of Line Termination	GeoffT

Acronyms:

AVF	Alarm Verification Facility	a facility designed to minimise 'false alarms'. Upon activation of a detector, software resets the circuit or detector, waiting for further triggering.
EOL	End of Line	- end of line termination used to monitor the presence and integrity of a circuit.

Glossary:

'Smoke' Circuit	**LK1** removed	The Loop Responder operates as a conventional fire detection device.
'Switch Input'	**LK1** fitted	The Loop Responder operates as a switch input device. A short circuit signals activation.
F100A		Pertronic F100A series Fire Alarm Panel
F120A		Pertronic F120A series Fire Alarm Panel

CONTENTS

1. INTRODUCTION 1
   - 1.1 Functional Description 1
   - 1.2 Loop Responder Block Diagram 1
   - 1.3 Loop Responder Specification 2
2. SYSTEM FEATURES 4
   - 2.1 'Smoke' or 'Switch Input' Selection 4
   - 2.2 'Smoke' Mode 4
   - 2.3 'Switch Input' Circuits Mode 5
   - 2.4 Loop and External Power Supply 5
   - 2.5 Loop Connection Limitations 6
   - 2.6 Relay Output 7
   - 2.7 Addressing 7
   - 2.8 Loop Fault Tolerance 8
   - 2.9 'Smoke' Circuit Datum Levels 8
   - 2.10 'Switch Input' Datum Levels 10
   - 2.11 Loop Responder Fault Notification 11
3. 3k3Ω or 4k7Ω END OF LINE TERMINATION 12
4. DETECTOR COMPATIBILITY 14
   - 4.1 Circuit Operation 14
   - 4.2 'Smoke' Circuit and AVF 14
   - 4.3 Detector Limitations 16
5. LOOP RESPONDER INSTALLATION DIAGRAMS 17
   - 5.1 Loop Responder PCB Layout 17
   - 5.2 Externally Powered Connection Diagram: 17
   - 5.3 'Smoke' Mode – typical connections 18
   - 5.4 'Switch Input' Mode – typical connections 18

Index of Figures

Figure 1 Loop Responder Block Diagram 1
Figure 2 LK1 Location and Base Address Selection 4
Figure 3 Conventional Circuit 'M-Level' Datum Voltage: Alarm and Fault Trip Levels 9
Figure 4 Loop Responder PCB Layout - shows the location of key components 17
Figure 5 Externally Powered Connection Diagram 17
Figure 6 Conventional Detector Circuit 18
Figure 7 Switch Input Circuit 18

Index of Tables

Table 1 Loop Responder LED Notification 3
Table 2 'Smoke' Circuit State (20.0Vdc supply) 8
Table 3 Loop Responder 'Switch Input' Circuit Levels (20.0Vdc supply) 10
Table 4 Loop Responder Fault Notifications 11
Table 5 Detector Limitations on the Conventional Circuit 16

1. INTRODUCTION

1.1 Functional Description

The ***Loop Responder*** is used primarily to interface zones of conventional detectors into Pertronic analogue addressable fire alarm systems.

The ***Loop Responder*** has eight (8) inputs which may be used either in 'Smoke' mode to monitor conventional circuits containing smoke and/or heat detectors and manual call-points, or alternatively in 'Switch Input' mode, to monitor Sprinkler Valve interference switches or beam detectors, read the fault and alarm status of VESDA detector systems or receive commands from a SCADA system, etc.

The ***Loop Responder*** also has a relay with one set of clean changeover contacts that can be mapped as a loop relay and utilised by the panel.

The ***Loop Responder*** uses 9 module loop addresses – the first eight for input circuits 1 to 8, and the ninth for the relay.

A limited number of ***Loop Responders*** may be powered from the loop. If larger numbers are required, they may be powered from an external supply (or supplies) that are electrically isolated from the panel's power supply.
This gives the **F100A** and **F120A** a large conventional detector capability.

1.2 Loop Responder Block Diagram

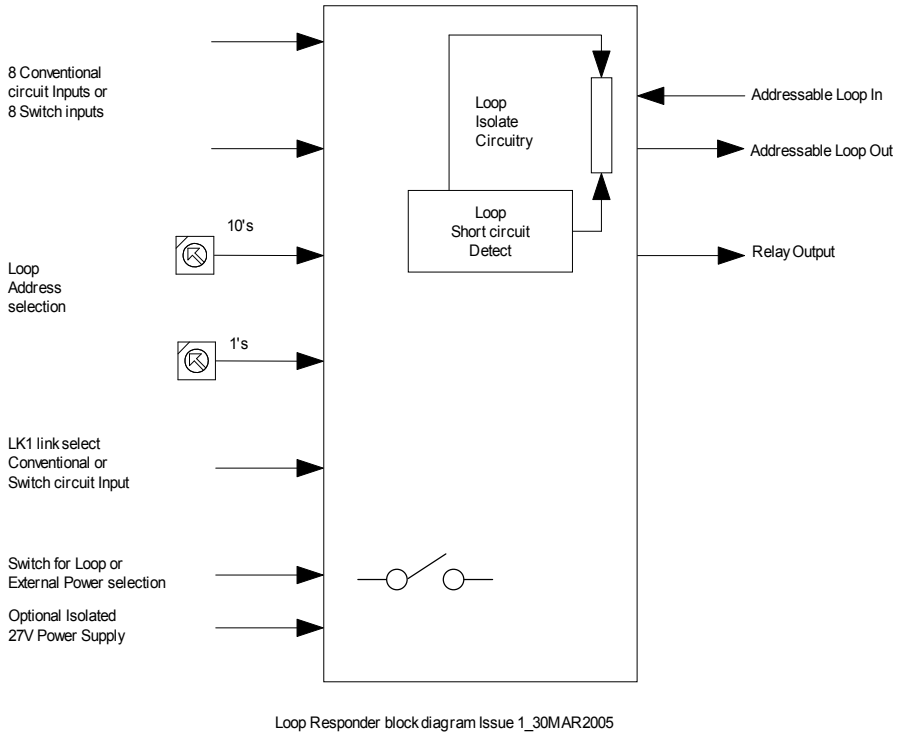

Figure 1 Loop Responder Block Diagram

Note: External Power Supply must be isolated from the panel battery and Earth.

1.3 Loop Responder Specification

*This specification applies to **Loop Responders** with printed circuit board versions 2.31 or greater.*

Dimensions:	PCB:	96 x 165	H x W (mm).
	Optional Cabinet:	254 x 310 x 70	H x W x D (mm)
	Weight:	2.2Kg	
	Material:	1.2mm mild steel	
		Powder coated off-white (other colours optional).	

Circuits:

8 smoke circuits or 8 switch inputs (selectable) for each responder. Selection is determined by link, **LK1**.

- with **LK1** removed, the circuits are configured to use conventional smoke detectors, heat detectors and manual call-points;
- with **LK1** inserted, the circuits are configured to use clean switch inputs.

The circuit voltage is 19.7Vdc ±0.5 V, nominally 20Vdc.

For 'Smoke' conventional circuits, manual call-points and heat detectors short the circuit when operated; smoke detectors clamp the voltage at 4.5V to 8.0V across the circuit, depending on the model of detector which has operated.

The circuit 'M' voltage, when 'Normal', will vary between 1.0V and 7.5V, depending on the detector load. Up to 40 System Sensor smoke and/or heat detectors may be installed per circuit, with unlimited manual call-points.
When configured as 'Switch Input', an equivalent circuit resistance <5kΩ, will generate an alarm.

Relay Output: 1 changeover contact rated 24Vdc, 1.25A.

External Power An external power supply, rated 27Vdc ±10%, 1A minimum, may be used to supply the circuit power.
Selection is made on the PCB using switch **(S1)** labelled **External Power** / **Loop Power**.
The external supply must be isolated from the panel battery, with no Earth connection.

DC Current: Switch **S1** on the Loop Responder selects whether the circuit is powered from the analogue loop, or from an isolated external power supply.

S1 in the **Loop Power** position**:**

The analogue loop will supply the circuit (the loop voltage must be >16V).

24V, 30mA (no detectors, 10kΩ EOL Resistor).

'Smoke' Input Configuration:

Add 2mA for each group of 20 detectors.

Add 20mA for activated smoke alarms on each circuit

Short circuits add no extra current.

'Switch Input' Configuration:

For open and short circuits, add no extra current.

Notes:

a) in 'Smoke' mode **ONLY**, the preferred 10kΩ EOL Resistor may be replaced with either a 3k3Ω or 4k7Ω EOL Resistor.

b) in 'Switch Input' mode, a resistance <5kΩ generates an 'Alarm'.

Refer to Section 3: **3k3Ω or 4k7Ω End of Line Termination**

Note: The maximum total loop current allowed for all connected loop devices is 350mA per loop. Use this current limit to determine the number of *Loop Responders* that can be installed on each loop. Allow for the current contributed by activated smoke detector circuits when used.
The loop voltage must not fall below 16Vdc under 'Alarm' conditions.
Refer to Loading examples in Section 2.5.

S1 in the **External Power** position**:**

The analogue loop powers the processor and loop interface components - the loop voltage must be >16V.

24V, 5mA (no detectors, 10kΩ EOL Resistor).

The external power supply powers each detector circuit.

24V, 25mA (no detectors, 10kΩ EOL Resistor).

Add 2mA for each group of 20 detectors.
Add 20mA for activated smoke alarms on each circuit
Short circuits add no extra current.

Refer to Section 3: **3k3Ω or 4k7Ω End of Line Termination.**

Addressing: Each ***Loop Responder*** uses 9 address spaces.

Addresses 1 to 8 are allocated to input circuits 1 to 8 respectively.

Address 9 is allocated to the relay.

The Address switches select the base or start address for the Loop Responder, and correspond to the address for Circuit 1.

Poll LED: The Poll LED (**LED1**: **POLL / FAULT**) flashes when the panel polls the Loop Responder. It also indicates the status of the Loop Responder.

Status	LED ON	LED OFF	Description
Normal	Irregular Flashes		LED1 flashes in response to polling of the addresses from the Pertronic Panel (***F100A*** or ***F120A***). The period between polls depends upon the number of Loop Responders connected to the Panel
Smoke and Heat Detector Alarm	3 secs		LED1 turns ON for 3 secs in response to Detector Smoke Alarm.
MCP Alarm	1 sec		LED1 flashes ON for 1 sec, in response to Short Circuit activation.
Reset	100mS	100mS	A reset on any one of the 8 circuits, causes LED1 to flash for about 5 seconds.
Factory Test	500ms	500ms	LED1 flashes when Loop Responder is in Factory Test mode. Panel will indicate that the Loop Responder is missing.

Table 1 Loop Responder LED Notification

2. SYSTEM FEATURES

2.1 'Smoke' or 'Switch Input' Selection

Link **LK1**, located at the centre-bottom of the ***Loop Responder*** PCB (refer to Figure 2), selects the function of the inputs.

- with **LK1** removed, conventional Smoke Detectors, Heat Detectors and Manual Call-points (MCP) are used for all 8 circuits.

- with **LK1** inserted, 'Switch' input operation is used for all 8 circuits, allowing the use of switch or clean relay change-over contacts for the 'Fault' or 'Alarm' states.

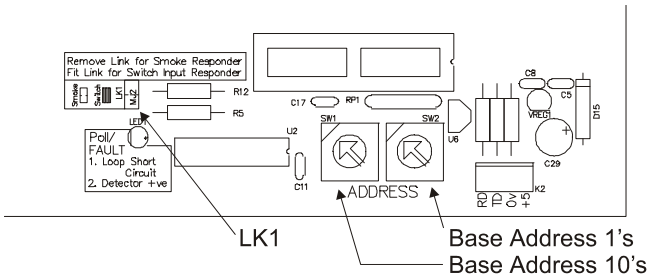

Figure 2 LK1 Location and Base Address Selection

2.2 'Smoke' Mode

LK1 is not fitted.

An 'End of Line' terminating resistor is required for each circuit.

A value of 10kΩ is recommended for Pertronic systems, however values as low as 3k3Ω will work. The lower the value used, the larger the quiescent current drawn by the Loop Responder for a particular detector loading. This may also reduce the number of other devices which may be connected to a loop.

- for EOL values other than 10kΩ, refer to Section 3: **3k3Ω or 4k7Ω End of Line Termination.**

During 'Normal' operation, the 'M' point on the circuit will vary between 1.0V and 7.5V, depending on the detector load. Up to 40 System Sensor smoke and/or heat detectors and an unlimited number of manual call-points may be installed per circuit.

System Sensor smoke and heat detectors clamp the detector voltage at 4.5V to 8.0V across the circuit, depending on the model and number of detectors which have activated, giving a circuit 'M' voltage in 'Alarm' state between 9.0V and 18.5V.

Manual Call-Points short the circuit when operated giving a circuit 'M' voltage in 'Alarm' state >18.5V. The Loop Responder will report a MCP Alarm.

The Loop Responder has internal AVF (Automatic Verification Facility). When a detector activates, the Loop Responder resets that circuit, and 'arms' the circuit for 100 seconds. If the detector activates within this 100 second period, the Loop Responder reports an 'Alarm' to the panel.

When a user operates auto-learning from the panel's menu, the configuration of each circuit defaults to Type **LPRS**.

Refer to Table 2 for the datum settings ('M-Level' voltage) of a Loop Responder operating in 'Smoke' mode.

Refer to Figure 6 for a wiring guide.

2.3 'Switch Input' Circuits Mode

LK1 is fitted.

A 10kΩ End of Line resistor is required for each circuit.

When the Loop Responder is configured as 'Switch Input', a circuit resistance less than 5kΩ will generate an 'Alarm', a circuit resistance greater than 12kΩ will generate a 'Fault'.

By default, the 8 circuits are configured as Type **MCP** in the ***F100A*** or ***F120A***. Each circuit should be reconfigured to a more appropriate type, eg. Switch Input, etc.

'Switch Inputs' MUST NOT be used for detection of conventional fire circuit devices, eg Manual Call-Points.

Refer to Table 3 for the datum settings ('M-Level' voltage) of a Loop Responder operating in 'Switch Input' mode.

Refer to Figure 7 for a wiring guide.

2.4 Loop and External Power Supply

Switch **S1**, located at the top right of the ***Loop Responder*** PCB, is used to select whether the detector circuits are powered from the Analogue Loop or an isolated, external power supply.

The microprocessor and Loop interface components are always powered from the Loop, but by using **S1**, either the Loop or an External Power Supply may be selected to power the detector or switch circuits. This conserves the power requirement from the Analogue Loop when a number of Loop Responders are used.

The maximum total loop current available for all connected loop devices is 350mA per loop.

When the **Loop Power** position on switch **S1** is selected (Figure 3.1), the Loop supplies the power required by the circuits.

When the **External Power** position on switch **S1** is selected (Figure 3.2), the external supply provides the power required by the circuits. Note that separate, isolated supplies must be used for responders on different loops. Refer to Figure 5 for a connection diagram.

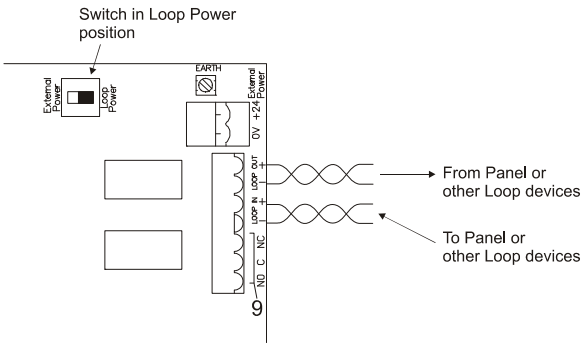

Figure 3.1: Loop Powered Connection

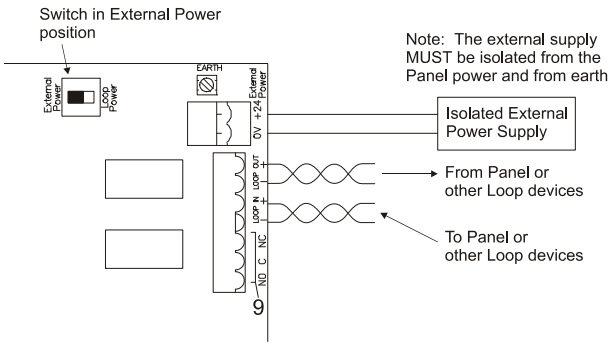

Figure 3.2: Externally Powered Connection

2.5 Loop Connection Limitations

For EOL values other than 10kΩ, refer to Section 3: **3k3Ω or 4k7Ω End of Line Termination.**

a) Power Supplied from the Analogue Loop only:

Loop power for each Responder (no external supply):
24Vdc, 30mA (no detectors, 10kΩ EOL resistor only).

For '**Smoke' operation:**

Add 2mA for each group of 20 smoke or heat detectors.
Add 20mA for activated detectors for each circuit
A short circuit adds no extra current.

Loop Powered: example 1 (10 Responders – Switch Input types):

10 Responders at 30mA each require	10 x 30mA =	300mA
	Loop Power Total	**300mA**

50mA is available for other loop devices

Loop Powered: example 2 (3 Responders – Smoke detector types):

3 Responders at 30mA each require	3 x 30 =	90mA
3 x 8 circuits with 20 detectors each require	3 x 8 x 2 =	48mA
Allow 5 activated detectors	5 x 20 =	100mA
	Loop Power Total	**238mA**

112mA is available for other loop devices.

For '**Switch Input' operation:** add no extra current.

c) With External Supply:

Loop power for each Responder using an isolated external supply:
24V dc, 5mA. The external supply powers the circuits.

(i) Isolated external supply current for each Responder to power the circuits:

24V, 25mA (no detectors, 10kΩ EOL resistor only).
Add 2mA for each group of 20 detectors.
Add 20mA for activated alarms for each circuit.
A short circuit adds no extra current.

Isolated External Supply example (8 Responders):

8 Responders require	8 x 5 =	40mA
	Loop Power Total	**40mA**

310mA is available for other loop devices.

8 Responders at 30mA each require	8 x 30 =	240mA
8 x 8 circuits with 20 detectors each require	8 x 8 x 2 =	128mA
Allow 5 activated detectors	5 x 20 =	100mA
	External Supply Total	**468mA**

c) Loop Voltage-Drop Considerations:

The loop voltage at the Responder must be greater than 16V under worst-case conditions.

To calculate the voltage drop between the panel loop-driver and the Loop Responder, assume the following conditions:

The loop is open at one end

The Responder is closer to the open end of the loop

The battery voltage is low (20V) which gives a loop driving voltage of 18V

The loop conductor resistance is 37.5 ohm for each 1000m of 1mm^2 cable.

Under these conditions, a voltage drop of just 2V is allowed between the panel and the Responder.

If the Responder was the only device on the loop and it took 150mA under alarm conditions (normally 30mA), the maximum length of cable (using 1mm^2 conductors) allowable between the panel and the Responder would be:

The resistance for a voltage drop of 2V is

(2V / 150mA) = (2 / 0.150) = 13.3 ohms.

The maximum length of 1 mm^2 cable that may be used is

(13.3 / 37.5) = 0.347Km = 347m.

2.6 Relay Output

A non-monitored output relay is provided.
It may be configured as any of the available types used in the ***F100A*** or ***F120A*** (AUX, AUXM, RLY, RLYM, DHR, SND, SNDM etc).
The relay has one NO-C-NC changeover contact rated 24Vdc, 1.25A.
The relay has the loop module address of the ***Loop Responder*** base address plus 8.

2.7 Addressing

Select the base address (01 to 91) using the two Loop Address switches labeled **ADDRESS** located at the bottom right of the PCB. (refer to Figure 2).

The ***Loop Responder*** uses 9 Module loop addresses:

- the first or base address for Circuit 1,
- the second address (base address + 1) for Circuit 2, and so on to
- the eighth address (base address + 7) for Circuit 8.
- the ninth address (base address + 8) is assigned to the output relay.

Each loop can have a maximum of 99 modules (addresses 01 to 99), so the highest base address a ***Loop Responder*** can have is 91.

2.8 Loop Fault Tolerance

The ***Loop Responder*** has an in-built isolation facility.

If the loop on either side of the responder short-circuits, the Loop Responder will isolate that side of the loop to maintain full functionality.

Single open-circuits on the loop will not affect the operation of the Loop Responder because the loop is bi-directional.

A faulty input circuit on the ***Loop Responder*** will not prevent other circuits operating normally.

If the isolator on the Loop Responder operates, and the responder is configured in 'Smoke' mode, the Loop Responder will report an "ISOLATOR operated" message to the panel.

If the Loop Responder is in 'Switch Input' mode, a fault message will be displayed on the panel.

The "ISOLATOR operated" message will be reported through the first circuit of the board. Because the loop was isolated due to a short, the panel will raise a loop break event.

2.9 'Smoke' Circuit Datum Levels

Table 2 shows the 'M' point voltage levels on a conventional detector circuit.
The values are measured at the 'M' terminal of each circuit, with respect to battery negative (0V).
- do not measure across the circuit, from + to M. The result is NOT a valid reading!

The datum is the steady state of I_M current.

Circuit State	V_M (V)	I_M (mA)	Comments
Low Fault	$V_M < 1V$		If the datum falls to these values, a Low Fault will be raised.
Normal	1.5V	1.8mA	With a 10kΩ EOL resistor only.
	$1.5V < V_M < 7.5V$	$1.8 < I_M < 9.3mA$	Datum current ranges from 1.8 to 9.3mA are considered 'Normal'
EOL Resistor Lost	V_M – 0.7V	I_M – 0.7mA	If the datum drops more than 0.7V within 1 second, a Low fault will be raised. This may be activated by an open-circuit or loss of End-of-Line Resistor (10kΩ)
High Fault	$7.5V < V_M < 9.0V$		If the datum rises to these values, a High Fault will be raised.
Detector Smoke Alarm	$9V < V_M <$ Vref -1.5V	$12.8 < I_M < 24.8mA$ $[2 < I_M < 3.6mA]$	Approximate response time is 6 seconds. [Power Save mode]
MCP Activated	Vref -1.5V $< V_M$	$24.8 < I_M$ $[3.6mA < I_M]$	A Short-Circuit has been detected. [Power Save mode]

Table 2 'Smoke' Circuit State (20.0Vdc supply)

NOTES:

1) The minimum voltage change for a 'Fault' is ±0.5V in 0.8 seconds.
2) Vref is the Circuit Loop voltage, nominally 20.0Vdc - it may vary.

Figure 4 depicts the regions for the M-value voltages, and the transitions required from the datum for various Fault and Alarm situations.

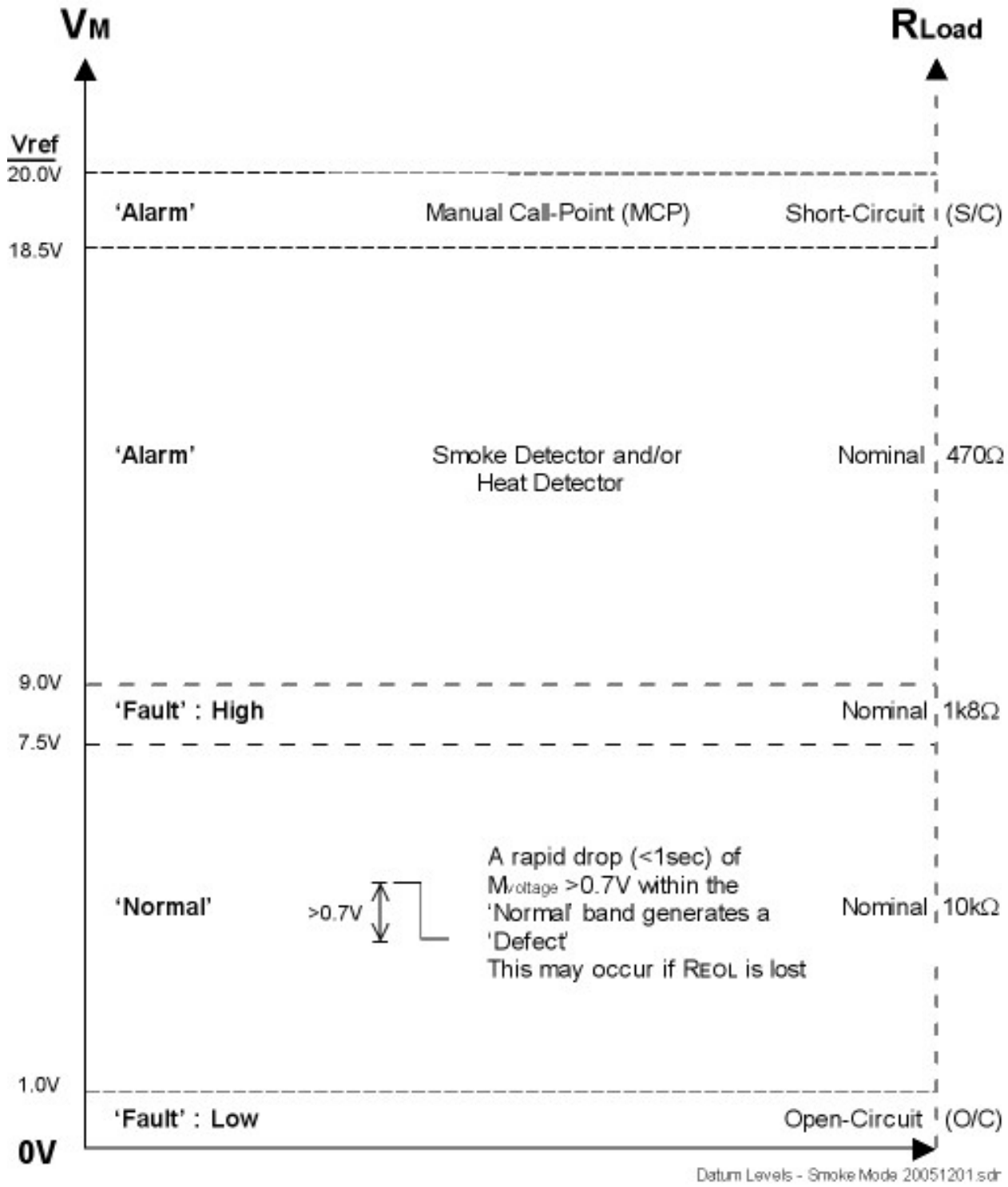

Figure 3 Conventional Circuit 'M-Level' Datum Voltage: Alarm and Fault Trip Levels

2.10 'Switch Input' Datum Levels

Table 3 shows the voltage levels and **Circuit Load** (R_L) values for switch input: 'Normal', 'Fault' and 'Alarm' state.

Circuit State	V_M (V)	Circuit Resistance	Comments
Short-circuit (SC) Alarm (MCP)	$V_M > 2.78V$	$R_L < 5k\Omega$	Nominal: $R_L = 1k\Omega$
Short-circuit (SC) Fault	$1.82V < V_M < 2.78V$	$5k\Omega < R_L < 8k\Omega$	Nominal: $R_L = 6k8\Omega$
Normal	$1.24V < V_M < 1.82V$	$8k\Omega < R_L < 12k\Omega$	Nominal: $R_{EOL} = 10k\Omega$
Open-circuit (OC) Fault	$V_M < 1.24V$	$12k\Omega < R_L$	

Table 3 Loop Responder 'Switch Input' Circuit Levels (20.0Vdc supply)

Figure depicts the regions for the M-value voltages and equivalent circuit resistance values.

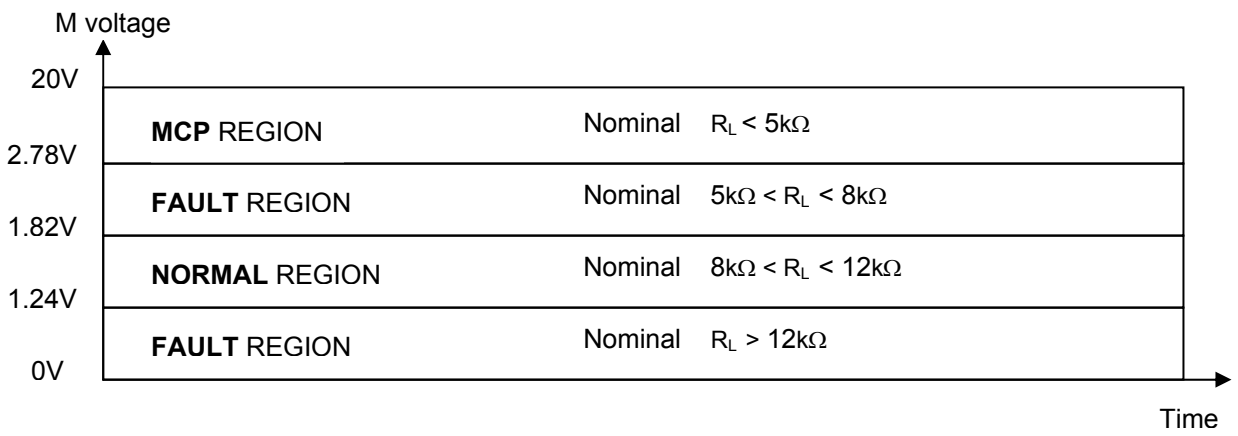

Figure 5 Switch Input Circuit M point voltage and Circuit Load

2.11 Loop Responder Fault Notification

Faults are reported as shown in Table 4

Condition		Faults Reported to Panel	F100A Display	F120A Display
'Smoke' circuit faults	Datum High Too many detectors (more than 40 detectors)	Datum voltage 'High Fault' associated with the address of that circuit	HI	High Fault
	Datum Low Open Circuit	Datum voltage 'Low Fault' associated with the address of that circuit	LO	Low Fault
	Open Circuit Caused by rapid >0.7V drop on the M point	'Low Fault' associated with the address of that circuit	LO	Low Fault
	EOL Resistor missing	Low Fault will be reported at power up, reset from panel, or after 24hr test, associated with the address of that circuit	LO	Low Fault
	External Power Mode: Power Lost	'PSU Fault' reported through all 8 circuits of that board	PSU	Supply Fault
	Vref (20V) Circuit Voltage Failure	'PSU Fault' reported through all 8 circuits of that board	PSU	Supply Fault
	Loop Short	'Isolator Fault' reported through first circuit of that board	Device ISO and Loop Break	Device Isolator Fault and Loop Break
'Switch Input' circuit faults	Circuit M point in fault band (Refer Table 3)	'Fault' associated with the address of that circuit.	FLT	FAULT
	External Power Mode: Power Lost or too low	'Fault' reported through all 8 circuits of that board	FLT	FAULT
	Vref (20V) Circuit Voltage Failure	'Fault' reported through all 8 circuits of that board	FLT	FAULT
	Loop Short	'Fault' reported through first circuit of that board	Device FLT and Loop Break	Device FAULT and Loop Break

Table 4 Loop Responder Fault Notifications

3. 3k3Ω or 4k7Ω END OF LINE TERMINATION

Pertronic recommends each conventional circuit be terminated with a 10kΩ EOL resistor to provide monitoring of the integrity of the circuit.
Advantages of a 10kΩ EOL terminating resistor are:

- minimises the quiescent current draw per circuit
- increases the number of responders which can be run using the analogue loop as the power supply
- maximum number of detectors which can be connected to each is circuit is 40, refer to Table 6

The Loop Responder will operate where existing installations use either a 4k7Ω or 3k3Ω terminating resistor.
Disadvantages of using low resistance EOL terminating resistors are:

- increases the quiescent current draw per circuit
- reduces the number of responders which can be run using the analogue loop as the power supply
- maximum number of detectors which can be connected to each is circuit is 40, refer to Table 6

EOL	Quiescent Current (mA) if supplied from Analogue Loop (Load = EOL Only)	Number of Responders powered ex Analogue Loop (max)	Quiescent Current (mA) from Analogue Loop if supplied from External PS (Load = EOL Only)	Quiescent Current (mA) from External PS (Load = EOL Only)
10kΩ	30	10	5	25
4k7Ω	45	7	5	40
3k3Ω	60	5	5	55

Table 5 EOL Termination Comparison

Loop Responder Specification

*This specification applies to **Loop Responders** with printed circuit board versions 2.31 or greater.*

The analogue loop will supply the circuit (the loop voltage must be >16V).

24V, 45mA (no detectors, 4k7Ω EOL Resistor).

24V, 60mA (no detectors, 3k3Ω EOL Resistor).

'Smoke' Input Configuration:

Add 2mA for each group of 20 detectors.

Add 20mA for activated smoke alarms on each circuit

Short circuits add no extra current.

'Switch Input' Configuration:

For open and short circuits, add no extra current.

Note: the preferred 10kΩ EOL Resistor may be replaced with either a 3k3Ω or 4k7Ω EOL Resistor in 'Smoke' **ONLY** mode, in 'Switch Input' mode, a resistance <5kΩ generates an 'Alarm'.

Note: The maximum total loop current allowed for all connected loop devices is 350mA per loop. Use this current limit to determine the number of *Loop Responders* that can be installed on each loop. Allow for the current contributed by activated smoke detector circuits when used.
The loop voltage must not fall below 16Vdc under 'Alarm' conditions.
Refer to Loading examples in Section 2.5.

S1 in the **External Power** position**:**

The analogue loop powers the processor and loop interface components - the loop voltage must be >16V.

24V, 5mA (no detectors, 4k7Ω EOL Resistor).

24V, 5mA (no detectors, 3k3Ω EOL Resistor).

The external power supply powers each detector circuit.

24V, 40mA (no detectors, 4k7Ω EOL Resistor).
24V, 55mA (no detectors, 3k3Ω EOL Resistor).
Add 2mA for each group of 20 detectors.
Add 20mA for activated smoke alarms on each circuit
Short circuits add no extra current.

Loop Connection Limitations:

a) Power Supplied from the Analogue Loop only:

Loop power for each Responder (no external supply):
24Vdc, 60mA (no detectors, 3k3Ω EOL resistor only).

For '**Smoke' operation:**

Add 2mA for each group of 20 smoke or heat detectors.
Add 20mA for activated detectors for each circuit
A short circuit adds no extra current.

Loop Powered example 1 (5 Responders – Switch Input types):

5 Responders at 60mA each require	5 x 60mA =	300mA
Loop Power Total		**300mA**

50mA is available for other loop devices

NOTE: with a 3k3Ω EOL resistor, a maximum of only 5 Loop Responders may be powered from the loop

Loop Powered example 2 (3 Responders – Smoke detector types):

2 Responders at 60mA each require	2 x 60 =	120mA
2 x 8 circuits with 20 detectors each require	2 x 8 x 2 =	32mA
Allow 5 activated detectors	5 x 20 =	100mA
Loop Power Total		**252mA**

98mA is available for other loop devices.

For '**Switch Input' operation:** add no extra current

b) With External Supply:

Loop power for each Responder using an isolated external supply:
24V dc, 5mA. The external supply powers the circuits.
(ii) Isolated external supply current for each Responder to power the circuits:

24V, 25mA (no detectors, 3k3Ω EOL resistor only).
Add 2mA for each group of 20 detectors.
Add 20mA for activated alarms for each circuit.
A short circuit adds no extra current.

Isolated External Supply example (8 Responders):

8 Responders require	8 x 5 =	40mA
Loop Power Total		**40mA**

310mA is available for other loop devices.

8 Responders at 60mA each require	8 x 60 =	480mA
8 x 8 circuits with 20 detectors each require	8 x 8 x 2 =	128mA
Allow 5 activated detectors	5 x 20 =	100mA
External Supply Total		**708mA**

4. DETECTOR COMPATIBILITY

4.1 Circuit Operation

Manual call-points, which are normally open and short-circuit for the alarm condition, will give a Fire signal within 1 second of device operation.

Devices, which increase the current in the detector line, such as smoke or heat detectors have a 4 second gated operation to eliminate false alarms due to transient conditions. Note that these detectors typically clamp at 5-7 volts in the operated condition and this voltage level must exist for the operation to be recognized as detector activation. An open-circuit gives a fault signal.

4.2 'Smoke' Circuit and AVF

4.2.1 AVF within Loop Responders

Loop Responders automatically perform an internal AVF (alarm verification) on smoke detectors to minimise false alarms. When a detector signals an activation, the Loop Responder initially resets the detector, and only processes an alarm condition to the panel if the detector signals a second activation within 100 seconds.

The exact sequence and timing of this procedure is:

1. A circuit (zone) signals a smoke condition.
2. The responder waits 200ms, resets the circuit for 800ms, ensuring all detectors on the circuit discharge.
3. The circuit is then ignored for 3 seconds to ensure the detectors have stabilised.
4. The responder 'arms' this circuit for 100 seconds.
5. (a) If any detector on the 'armed' circuit signals a smoke condition within the 100 second period, the circuit (zone) latches in the 'Alarm' state, and the alarm is reported to the panel.
   (b) If no detector on the 'armed' circuit signals a smoke condition within the 100 second period, the circuit reverts to the 'Normal' state, cancelling the first activation.

The typical time from the first activation until the Loop Responder reports an alarm to the panel is about 6 seconds.

The typical time from a detector's first activation until the Loop Responder reports an alarm to the panel is about 6 seconds. This sequence includes a detector's first activation, a second detector activation and reporting the alarm to the panel.

The alarm state can only be cleared by a Reset command from the panel.

4.2.2 AVF in Analogue Panels with Loop Responders

In addition to the responder's internal AVF procedure, a panel (**F100A** or **F120A**) can be instructed to perform AVF on any of its device addresses, including Loop Responder circuits.

The sequence that occurs between panel and Loop Responder is:

1. When the panel receives the first alarm message from a Loop Responder, it sends a Reset command to the Loop Responder circuit, i.e. after the Loop Responder has performed its internal AVF procedure, as described in Section 3.2.1.

2. The panel then marks this circuit in 'AVF-Armed' state for a period of 120 seconds, and reports an 'AVF Stage 1' message. The panel requests the Loop Responder to Reset its activated circuit.

   The reset of a Loop Responder circuit consists of 4 steps:
   a) Reset the detector
   b) wait 3 seconds to allow the circuit to achieve 'Normal' level
   c) perform an End of Line (EOL) test
   d) establish the datum level.
   After receiving a reset command from panel, the responder will disable the internal AVF facility for 180 seconds; any subsequent alarm will be immediately reported to the panel.

3. If the panel receives a second alarm message for that circuit within 120 seconds it will be processed as a genuine alarm.

The typical time from a detector's first activation until the panel reports an alarm is about 25 to 35 seconds. This sequence includes a detector's first activation, a second detector activation (Loop Responder's internal AVF), the Loop Responder reset, a third detector's activation, until the panel reports an alarm.

4.3 Detector Limitations

System Sensor Detectors draw a small monitoring current that limits the number of these devices that can be connected to a circuit.

Manual Call-points draw no current when inactive and so there is no limit to the number of these devices that can be connected to a circuit.

The maximum detector load depends on the magnitude of the standing current of the detectors and the stability of this standing current – this is limited to 4.8mA per circuit.

Device loadings for the Loop Responder are:

Detector Description	Maximum Quantity
Manual Call-Point (MCP) KAC WR 2001SR	Unlimited
System Sensor Model 1400 Ionisation or 2400 Photoelectric Smoke Detectors	40 per circuit
System Sensor Model 1100 Ionisation or 2100 Photo-electronic Low Profile Direct-Wire Smoke Detectors	40 per circuit
System Sensor Model 1151 Ionisation or 2151 Photoelectric Low Profile Smoke Detectors	40 per circuit
System Sensor Model 2351E Photo-electronic Smoke Detectors	40 per circuit
System Sensor Model 2351TEM Photo-electronic / Thermal Multi-criteria Detectors	40 per circuit
System Sensor Model 4351E High Temperature Thermal Detectors	40 per circuit
System Sensor Model 51x51 Series Rate of Rise and Fixed Temperature Thermal Detectors.	40 per circuit
System Sensor Model 5351E Rate of Rise and Fixed Temperature Thermal Detectors.	40 per circuit
The Maximum Total Device Load Allowed on Each Circuit is 4.8mA	
NOTE: These detector limits apply to Loop Responders having v3.00A or greater firmware.	

Table 6 Detector Limitations on the Conventional Circuit

5. LOOP RESPONDER INSTALLATION DIAGRAMS

5.1 Loop Responder PCB Layout

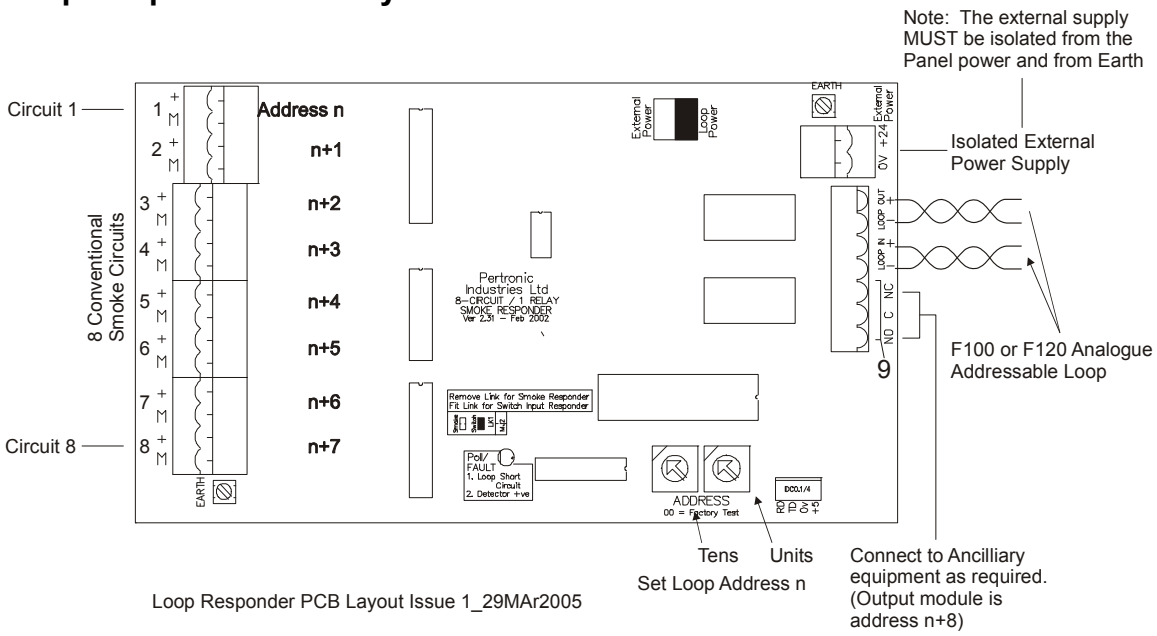

Figure 4 Loop Responder PCB Layout - shows the location of key components

5.2 Externally Powered Connection Diagram:

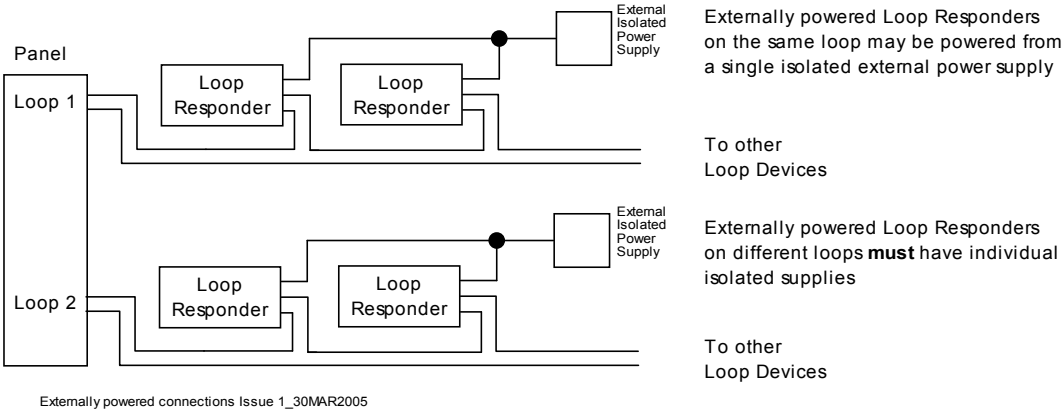

Figure 5 Externally Powered Connection Diagram

5.3 'Smoke' Mode – typical connections

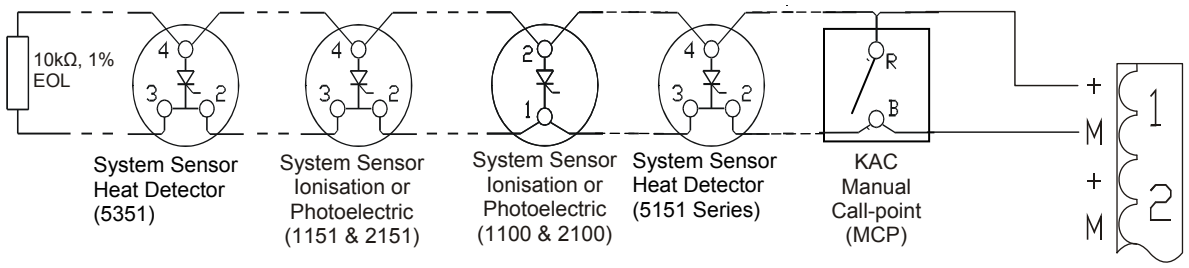

Figure 6 Conventional Detector Circuit

Typical connections showing conventional Smoke Detectors, Heat Detector and Call-point

5.4 'Switch Input' Mode – typical connections

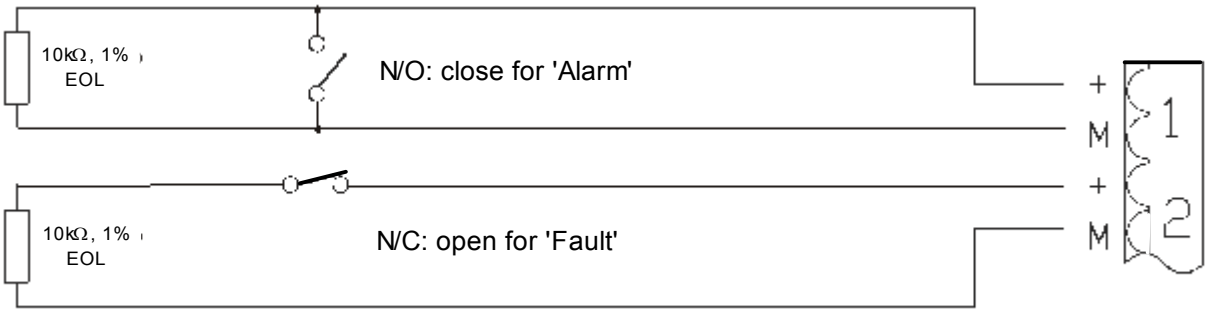

Figure 7 Switch Input Circuit