PERTRONIC
SPIB MODBUS INTERFACE
TECHNICAL MANUAL

Valid For:

SPIB Modbus Firmware	V3.00
SPIB Hardware	V1.50
Panel F220	V4.00 and later
Panel F120A, status only	V1.04.02, V1.32.05
Panel F120A, status plus isolate functionality	V4.24
Panel F120A, full functionality	V5.00

ISSUE 2.3

Serial Number:

Date of Manufacture: … / … / …

The content of this manual is copyright.

This document is to be used only for operating or maintaining Pertronic Fire Alarm systems.

This document is not to be reproduced, photocopied or passed in part or whole to a third party without the express, written authorisation of

Pertronic Industries

CONTENTS

1. Introduction 4
   - 1.1 Overview 4
   - 1.2 Description 4
   - 1.3 Overview of Features 4
   - 1.4 Interface Connections 6
2. Technical description 7
   - 2.1 Technician Isolate 7
   - 2.2 LED indicators 7
   - 2.3 Status Register Addressing 7
   - 2.4 Loop Devices 7
   - 2.5 Global Panel Status 8
3. Isolate Control 12
4. Loop Device Emulation 13
   - 4.1 Description 13
   - 4.2 System Configuration 13
   - 4.3 Modbus Configuration 13
5. Configuration Interface 15
   - 5.1 View Stored Options 15
   - 5.2 Panel Communications Setup 16
   - 5.3 Modbus Communication Setup 17
   - 5.4 Loop Device State Decoding Setup 17
   - 5.5 Save Configuration Data to Flash 18
   - 5.6 Revert to Saved Configuration 18
   - 5.7 Restore Default Configuration 18
   - 5.8 Export Configuration 18
   - 5.9 Import Configuration 19
6. Installation 22
7. Ordering Information 22

PERTRONIC SALES AND TECHNICAL SUPPORT 22

FIGURES

Figure 1-1 Typical SPIB Modbus application 5

Figure 1-2 SPIB hardware block diagram 5

TABLES

Table 1-1 SPIB Interfaces 6

Table 2-1 Loop Device States 8

Table 2-2 Modbus Register Data Packing Examples 8

Table 2-3 Status Registers 9

Table 2-4 Global Status Register 10

Table 2-5 Event Data Change Register 11

Table 2-6 AAF Timer Values 11

Table 3-1 Modbus Coil Addresses 12

Table 4-1 Modbus State Values 14

Table 4-2 Modbus Loop Device Address Examples 14

Table 5-1: Configuration Parameters for Import 21

1. INTRODUCTION

1.1 Overview

The Pertronic Modbus Interface is a firmware variant of the Pertronic Industries Special Purpose Interface Board (SPIB). It translates the status of a Pertronic fire alarm system into a register-based presentation that is accessible via the Modbus protocol.

1.2 Description

The Pertronic Modbus Interface allows bi-directional communication between a Pertronic analogue addressable fire alarm control panel and one or more Modbus client (previously called master) devices.

The Modbus Interface monitors the fire alarm control panel's RS485 Mimic Bus (both High Speed RS485 and Legacy/Low Speed RS485 Bus on the F220, and legacy bus on the F120A) and stores a copy of the panel's current event queue data in a Modbus-compatible format. This includes all data that is accessible from the panel's LCD display.

External devices are able to communicate with the fire alarm system via the Modbus Interface and Loop Emulation. The interface translates data from external Modbus registers into detector or module status data readable by the fire alarm control panel. The Modbus Interface can emulate up to four analogue addressable loops.

The Modbus Interface can also transfer isolate & de-isolate requests to the control panel.

The Modbus Interface supports ASCII and RTU Modbus modes over either RS232 or RS485. When fitted with a suitable adapter such as the MOXA MB3180, it also supports Modbus TCP.

When used with a suitable Modbus client device, the Pertronic Modbus Interface can optimise communication speed by packing data from up to four devices into a single Modbus register.

To avoid ground-loop problems, the Pertronic RS-485 Mimic Bus interface (SPIB connectors K3, K6 and K7) is galvanically isolated from the other interfaces.

1.3 Overview of Features

- Functions as Modbus server (previously called slave)
- Programmable sale address
- Modbus connection configurable RS-232 or RS-485, 300 to 230,400bps
- Modbus mode ASCII or RTU (binary)
- Supports Modbus TCP when connected to a RS-485 to TCP adapter
- Single, Double & Quad data packing to conserve communications bandwidth
- Provides all data accessible via the fire alarm control panel's LCD display
- Emulates up to four analogue addressable loops, each with up to 159 detectors and 99 modules (The total number of actual and emulated loops cannot exceed the panel's maximum loop capacity.)
- Optional fault monitoring between Modbus Interface and control panel
- Powered from the Pertronic mimic bus
- Configurable with a PC running a terminal emulation program via the USB port
- Galvanically isolated from the fire alarm control panel's RS-485 Mimic Bus. (This prevents connected equipment causing ground fault indications on the alarm panel.)
- On-board LEDs provide diagnostic information
- Selectable device information

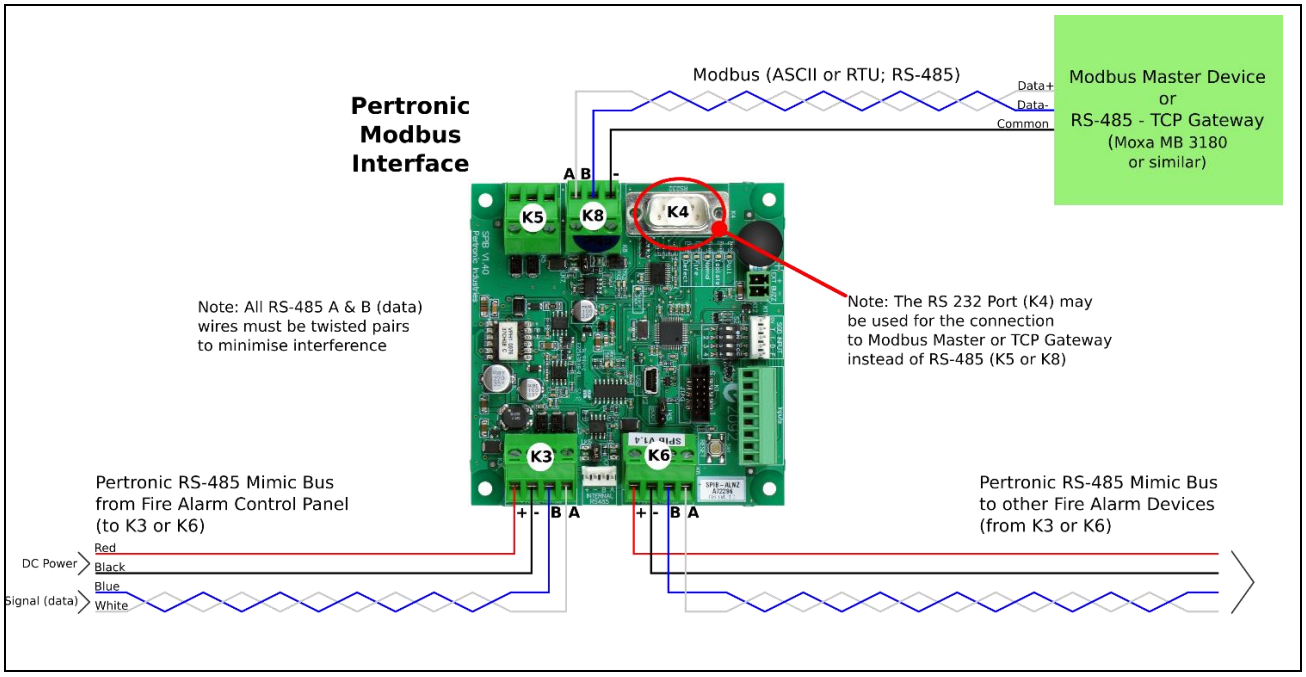

Figure 1-1 Typical SPIB Modbus application

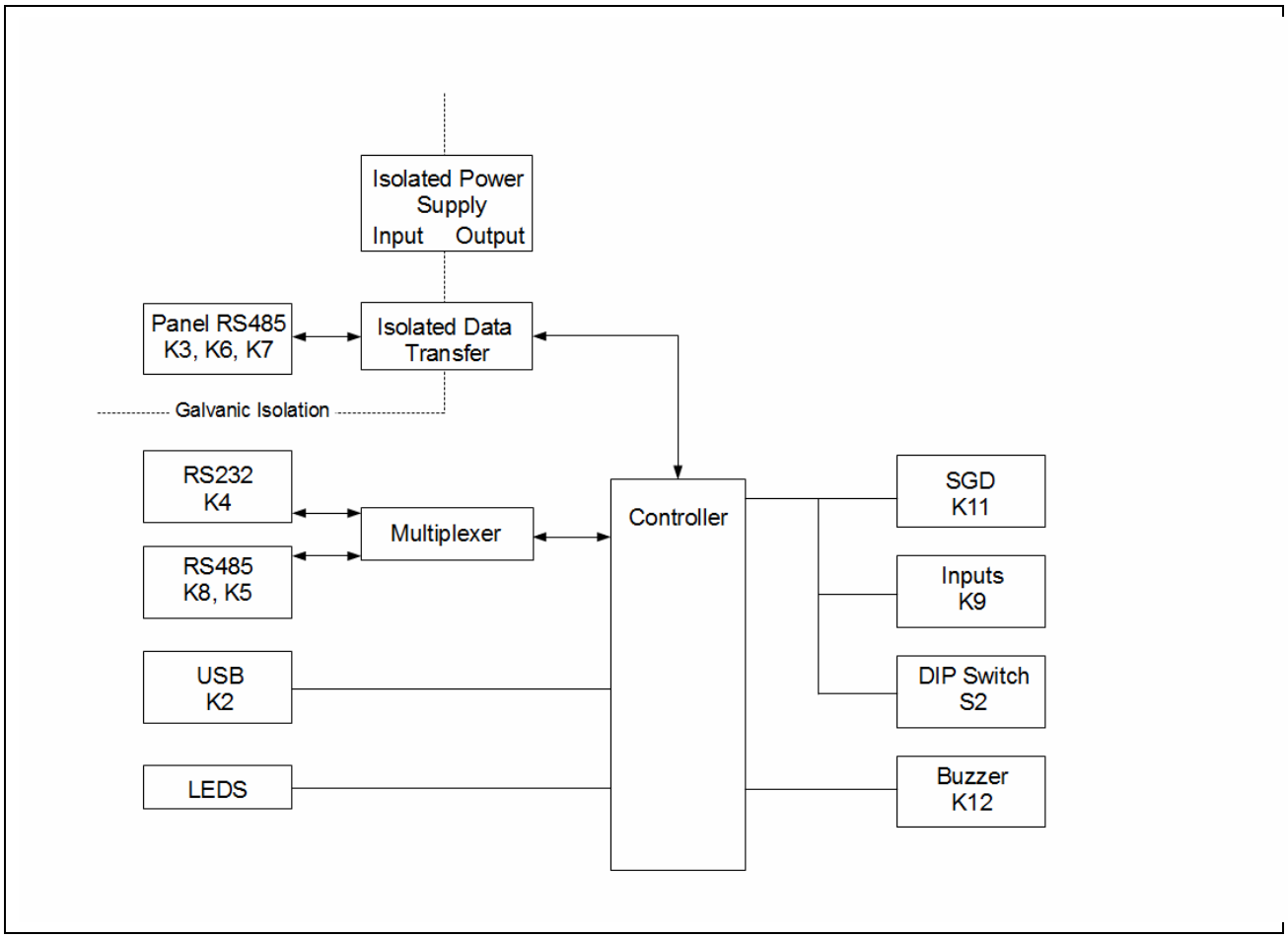

Figure 1-2 SPIB hardware block diagram

1.4 Interface Connections

The SPIB provides two serial interfaces, one is an isolated RS485 interface for panel connection via the Pertronic mimic bus and the other is for Modbus connection and is selectable between an RS232 or an RS485 interface. Not all of the SPIB interfaces are used in the Modbus application.

Interface	Connector	Description
Panel RS485	K3, K6, K7	Alarm panel connection via the Pertronic mimic bus. Galvanically isolated from the other SPIB ports. The SPIB is also powered from this interface in normal operation.
RS232	K4	Modbus connection. Either this port or the adjacent RS485 port can be configured for Modbus operation.
RS485	K5, K8	Modbus connection. Either this port or the adjacent RS232 port can be configured for Modbus operation.
USB	K2	USB 2 device port with a mini B socket, used to configure the SPIB. The SPIB is powered from this USB port during configuration, no RS485 power is required.
Inputs	K9	Some of these inputs are used for particular functions.

Table 1-1 SPIB Interfaces

The SPIB is powered from the “Panel RS485” connectors (any one of SPIB connectors K3, K6 or K7). Power to the remainder of the board is provided by a galvanically-isolated DC-DC converter, the RS485 data communications from the panel are also galvanically isolated. This isolation prevents external devices connected to the SPIB hardware causing earth fault issues on the connected panel. The Panel RS485 isolation barrier is rated as “Functional Insulation”.

2. TECHNICAL DESCRIPTION

2.1 Technician Isolate

The SPIB supports a 'Technician Isolate' function where the Modbus data will be set to a normal state except that the ISOLATE bit in the Global Status Register will be set, changes to writable registers is also disallowed. This function can be used when work on the system needs to be done without generating spurious events for the monitoring system.

The Technician Isolate function is activated by linking Input 1 to 0V on connector K9. Technician Isolate remains active as long as input 1 remains linked to 0V. After removing the input 1 link, the SPIB will immediately update any state information that was suppressed when Technician Isolate was active.

NOTE: The only indication that Technician Isolate is active is that the ISOLATE bit in the Global Status Register will be set (see Table 2-3 Status Registers

Global Status Register below), it is important that this register is monitored continuously to avoid misinterpretation of the panel state.

2.2 LED indicators

Two LEDs on the SPIB hardware have specific functions for Modbus operation:

- Normal – indicates the SPIB board is operating normally, this does not reflect the state of any connected panel.
- Defect – indicates a communication problem with the connected panel.

One or other of these two LEDs should be lit if the board is powered up. No other LEDs have any function for Modbus operation.

2.3 Status Register Addressing

All addresses here are expressed in the "1-based" notation; the first available address using this representation is 1, not 0. The Modbus communications protocol always uses "0-based" values, which are 1 less than what is shown in this document.

2.4 Loop Devices

Status data for loop devices is stored starting at address 1000 for loop 1, detector 0 (or L01D000 in standard panel address notation). Values can be read using either the Holding Register or Input Register access modes.

Each analogue device has a state value associated with it that can have up to 16 distinct values, with zero always being Normal. The remainder can be configured to be one or more of the following (see Loop Device State Decoding Setup section below for details):

State	Description
ALARM	Device is in alarm.
ACKNOWLEDGE	Device is still in alarm, but has been acknowledged via the front panel controls on the panel.
PREALARM	A smoke detector has reached 80% of its alarm level – a full alarm may be imminent.
ISOLATE	The device has been isolated.
MISSING	The device is not communicating with the panel.
MAINTENANCE	The device has reached the limits of its Drift Compensation adjustment & requires maintenance (cleaning).
FAULT	All other fault conditions (e.g. open/short-circuited monitored relays, two devices sharing a loop address, etc).
ACTIVE	Active device (not in alarm queue)

Table 2-1 Loop Device States

2.4.1 Data Packing

In the standard register layout scheme, each 16-bit Modbus register contains the state of each loop device. As the state value is described in 4 bits (values 0 to 15), this can result in inefficient use of communications bandwidth. The SPIB can pack multiple state values into a single 16-bit register, this also requires the Modbus client to be able to unpack these values. The 3 packing options are named Single (1 device per register), Double (2 devices per register) and Quad (4 devices per register). Some examples of each are shown below.

Panel Address	Single Packing Modbus Register (Bit offset)	Double Packing Modbus Register (Bit offset)	Quad Packing Modbus Register (Bit offset)
L01D001	1001 (0)	1000 (8)	1000 (04)
L01D002	1002 (0)	1001 (0)	1000 (08)
L01D159	1159 (0)	1079 (8)	1039 (12)
L01M001	1161 (0)	1080 (8)	1040 (04)
L01M099	1259 (0)	1129 (8)	1064 (12)
L07D001	2561 (0)	1780 (8)	1390 (04)
L13M056	4336 (0)	2668 (0)	1834 (00)
L20M099	6199 (0)	3599 (8)	2299 (12)

Table 2-2 Modbus Register Data Packing Examples

2.5 Global Panel Status

All status data, other than loop device status data, is stored starting at address 0001. As for the loop device data, the information can be read using either Holding Register or Input Register access.

The registers consist of a number of blocks containing various bit-wise indications as follows:

Name	Start Address	End Address	Bit Count	Description
Global Status	0001 (0)	0001(15)	16	See 2.5.1 Global Status Register
Loop Data Change	0002 (0)	0003 (3)	20	See 2.5.2 Loop Data Change Registers
Event Change	0004 (0)	0004 (15)	16	See 2.5.3 Event Data Change Register
Reference Voltage	0005 (0)	0005 (15)	16	Holds the panel's System voltage in mV as a 16 bit binary number.
Battery Voltage	0006 (0)	0006 (15)	16	Holds the panel's Battery voltage in mV as a 16 bit binary number.
Zone Offset	0007 (0)	0007 (16)	16	See 2.5.4 Zone Offset
Zone Timer Alarm	0008 (0)	0070 (6)	999	Alarm indications from Zonal non-Brigade timers.
Zone Isolate	0071 (0)	0133 (6)	999	Zone isolated Individual devices isolated via their associated zone do **not** have their Isolate status set also.
Zone Alarm	0134 (0)	0196 (6)	999	Zone in alarm The alarm state is independent of whether the zone is isolated or not; it shows there are active devices within the zone.
AAF Alarm	0197 (0)	0271 (15)	1200	Alarm Acknowledgement Facility alarms
AAF Timer	0272 (0)	0346 (15)	1200	AAF Timer running
AAF Acked	0347 (0)	0421 (15)	1200	AAF Timer Acknowledged The timer is still running, but has been acknowledged and is in the investigation period
Logic Block Isolate	0422 (0)	0484 (6)	999	Boolean logic block isolated
Logic Block Alarm	0485 (0)	0547 (6)	999	Boolean logic block in alarm
Timer Isolate	0548 (0)	0560 (7)	200	General-purpose timer isolated
Timer Alarm	0561 (0)	0573 (7)	200	General-purpose timer in alarm (completed)
Timer Running	0574 (0)	0586 (7)	200	General-purpose timer running
NetInput Isolate	0587 (0)	0626 (15)	640	Network input isolated
NetInput Alarm	0627 (0)	0666 (15)	640	Network input in alarm
LED States	0667 (0)	0794 (15)	2048	All panel LED states

Table 2-3 Status Registers

2.5.1 Global Status Register

This register is a 16-bit value located at 0001 which contains up to 16 Boolean states. Currently the following values are defined:

Name	Bit Offset	Description
FAULT	0	Panel Fault (other than Earth & PSU faults)
SPRINKLER	1	Sprinkler System Active
EVACUATE	2	Evacuate Active
PSU	3	Power Supply Fault (battery or charger)
EARTH	4	Earth Fault
COMMS	5	Communications Failure (no data received from panel)
ISOLATE	6	Technician Isolate (this suppresses **all** other status information)
SPR_ISO	7	Sprinkler (or Local MCP) Input Isolated
SPR_FAULT	8	Sprinkler (or Local MCP) Input Fault
NET_ISO	9	Network Isolated
NET_FAULT	10	Network Fault

Table 2-4 Global Status Register

2.5.2 Loop Data Change Registers

These registers are updated whenever data for a particular loop has changed, with register 0002 bits 0..15 corresponding to loops 1..16 and bits 0..3 of the following register (0003) corresponding to loops 17..20. The registers are cleared every time they are read, so that only subsequent events will set the bits.

The purpose of these registers is to allow the Modbus communications traffic to be optimised. The Modbus protocol requires that the server device (the SPIB in this case) is continuously polled to find new events. Since the number of possible events is large on the panel, this would normally require reading large numbers of registers, resulting in slow poll cycle times and hence slow response for the user of that information. The change register allows a minimal set of registers (0001 to 0004) to be read continuously at a relatively high rate. If a change is seen, then the larger Modbus request(s) can be made for the full loop data corresponding to the bit(s) set in the registers.

2.5.3 Event Data Change Register

This register is similar in operation to the loop data change registers above, but the bits correspond to the other global data blocks as follows:

Bit Offset	Changed Data Block
0	Zone Timer
1	Zone Isolate
2	Zone Alarm
3	AAF Alarm
4	AAF Timer
5	AAF Acknowledge
6	Logic Block Isolate
7	Logic Block Alarm
8	Timer Isolate
9	Timer Alarm
10	Timer Running
11	NetInput Isolate
12	NetInput Alarm
13	LED data

Table 2-5 Event Data Change Register

2.5.4 Zone Offset

The panel's Zone Offset parameter exists to allow multiple panels on a networked system to present unique Zone numbers in all displays/outputs. The panel still has up to 999 zones, but the reported number will have the Zone Offset value added to it. The zonal state bits below relate to the "real" zones on the panel; to convert to the zone number displayed by the panel & network, the Zone Offset must be added. For example, if the panel LCD indicates that Zone 2136 is isolated, but the zone offset value is 2100, then the Modbus register indicating that Zone 36 will be active, not zone 2136.

2.6 AAF Timers

This is a separate block of 16-bit values representing the remaining time, in seconds, for the AAF (or ADF if configured as such) before expiry. These registers will only contain valid values when the Active AAF Timers (see Section 5.2.6) are configured to be non-zero, and the monitored AAF block is actively running in the Acknowledge or Investigation phase, as determined by the AAF Timer and AAF Acknowledge states (see Table 2-3). As for the other status data, the information can be read using either Holding Register or Input Register access.

Name	Start Address	End Address	Register Count	Description
AAF Timer Value	10001	10008	8	AAF0001 to AAF0008 time remaining

Table 2-6 AAF Timer Values

3. ISOLATE CONTROL

The Isolate Control registers are implemented as virtual “coil” addresses in the Modbus protocol. Activating the “coil” initiates a request to Isolate the corresponding panel object, and deactivation de-isolates the corresponding object.

Since these are not physical registers, the SPIB logic does not allow the reading of these addresses, and the Write Multiple Coils (function 15) Modbus operation is not permitted. Hence only the Write Single Coil (function 05) is used to send ON or OFF commands to the virtual coil to achieve the desired effect.

Note also that an OFF command will not guarantee that the de-isolate command has any effect, since there are other isolate sources that can override this operation. For example, trying to de-isolate a device belonging to an isolated zone, or de-isolating a zone which also has an active Isolate mapping to the zone, will result in the de-isolate attempt being unsuccessful. The control using this feature is equivalent to performing the operation at the panel’s LCD controller, which also has the same limitations. The particular object’s Isolate state will be reflected in the corresponding registers from the ranges discussed in the earlier sections.

The Modbus coil addresses corresponding to the isolatable objects are:

Panel Object	Coil Address Range
Zone 001..256	0001..0256
Logic Block 001..300	1001..1300
Timer 001..200	2001..2200
Network Input 001..640	3001..3640
Device L01D001..L01D159	10001..10159
Device L01M001..L01M099	10161..10259
Device L02D001..L02D159	10261..10419
Device L02M001..L01M099	10421..10519
…	…
Device L20D001..L20D159	14941..15099
Device L20M001..L20M099	15101..15199

Table 3-1 Modbus Coil Addresses

Note: for loop devices, the Modbus coil address for any device address can be determined by:

coil = 10000 + 260*(loop - 1) + address + 160*<isModule>

where **<isModule>** is 0 for a detector and 1 for a module.

4. LOOP DEVICE EMULATION

Pertronic F220/F120A panels listed on the front page of this manual have the ability to inject external data into “virtual” loop devices via loop device emulation. This technique exploits device addresses that are commonly left unused for the majority of systems: those that use less than 19 physical loops out of the 20 available.

4.1 Description

In normal operation (and for all previous panel versions), if the panel sees valid configuration data for a loop device that is beyond the range of the loop driver boards fitted to the panel, it artificially generates “Missing” events for those devices. So, for example, if an F220/F120A panel has 4 loop driver boards attached, it can only address 8 loops’ worth of devices. If devices at any address from L09D001 to L20M099 were to be configured as valid device types, the panel would naturally generate Missing events for any of these.

If the panel has its global “Enable Loop Emulation” setting activated, this mechanism is altered; if any device is configured in a particular loop, the panel will send a special emulation request via the main RS485 bus with the corresponding loop number. If a loop emulation device is present that is set to handle requests for that loop, it should then respond to the panel with a list containing the state of all devices on that loop.

Note:

Loop Emulation is fully supported on F220`s high speed RS485 bus with panel software v8.0+ and on the F220 Legacy, or low speed, RS485 bus with panel software v4.0 to 7.04.

If no response is forthcoming, the panel reverts to its default behaviour and generates Missing events for the configured devices. For valid responses, the panel simply sets the state of the configured devices to the state value presented by the loop emulation device. There is no device type checking or sensitivity settings to be set up; the state is entirely determined by the loop emulation device. Apart from that distinction, all other panel processing proceeds as it would for a physical loop device.

The SPIB can emulate up to 4 loops, each containing up to 159 detectors and 99 modules, as for a standard F220/F120A loop.

4.2 System Configuration

4.2.1 Emulated Loop Start

This parameter is used for setting the panel loop number of the first of the loops that the SPIB will respond to for loop emulation (provided the “Enable Loop Emulation” setting is activated in the connected panel).

This parameter can be set to 0 (the default value) to disable loop emulation, otherwise it can have any value from 1 to 20.

4.2.2 Emulated Loop Count

The SPIB can also restrict the range of loops it responds to by setting the Emulated Loop Count parameter; this allows other emulation devices to coexist within a smaller range of loop numbers if necessary. This can be set to any value from 1 to 4.

4.3 Modbus Configuration

The state value for each emulated device is held in a Modbus register and can take any of 5 different values with the following meanings:

State	Device Condition
0	Normal
1	Alarm
2	Fault
3	Missing
4	Prealarm (detector addresses only)

Table 4-1 Modbus State Values

There are always 4 loops' worth of Modbus addresses accessible, regardless of whether the emulation range is restricted or disabled (see 4.1 above). even if they are not used by the panel.

The formula for obtaining the Modbus address for any device is as follows:

register = 8000 + 260*(loop - baseloop) + address + 160*<isModule>

Here, **<isModule>** is 0 for a detector and 1 for a module; **loop** refers to the loop number as seen by the panel; **baseloop** is the Emulation Base Loop parameter value.

Some examples:

Device Address (at panel)	Base Loop	Modbus Register
L10D001	10	8001
L10M047	10	8207
L10M099	10	8259
L13D125	12	8385
L15M034	12	8974
L15M099	12	9039

Table 4-2 Modbus Loop Device Address Examples

Any attempt to access addresses outside the 8000..9039 range will generate an error (assuming the register is also outside the other status registers mentioned in Status Register Layout above). Writing a value outside the state ranges outlined above will also result in an error response. The registers are readable as either Holding Registers or Input Registers (using Modbus functions 03 or 04, for example).

5. CONFIGURATION INTERFACE

The unit can be completely configured via the built-in terminal interface. A PC running a simple terminal emulation program (e.g. HyperTerminal, TeraTerm , PuTTY) can be used to communicate with the SPIB's serial emulation port using a standard USB mini-B cable.

The SPIB implements a Communications Device Class (CDC) server device via its USB port. For Windows systems, the device uses the standard Microsoft USB to serial driver, but must be associated with the USB ID of the SPIB so that the driver can function. If the version of Windows does not automatically create a virtual COM port, contact Pertronic for a suitable driver information file.

Note that traditional serial line parameters for baud rate, parity, etc. have no effect on the direct USB connection; communication always occurs at the maximum rate possible regardless of the serial settings.

Press '?' to display the banner as shown below.

```
==================================================
 P E R T R O N I C   I N D U S T R I E S   L T D
    Special Purpose Interface Board (SPIB)
        F100/F120 Modbus Interface
      Version x.xx, 13-Sep-2019 [xxxxx]
==================================================
Interactive Options:

  V) View stored options
  P) Panel communications setup
  M) Modbus communications setup
  L) Loop device state decoding setup
  S) Save configuration data to Flash
  R) Revert to saved configuration
  D) Restore default configuration
  E) Export configuration
  I) Import configuration
Selection:
```

At this point the SPIB is expecting one of the keys shown (V, P, M, L, S, R, D, E or I) to be pressed. The main menu options are discussed in detail below:

5.1 View Stored Options

Pressing V at the prompt sends the current configuration settings (the factory defaults are shown) to the terminal as follows:

```
---------------------------------------------
Stored Options
---------------------------------------------

+++ Modbus Communications +++
Use RS485 output: YES
Use ASCII mode for Modbus: NO
Port speed: 19200
Slave address: 1
Modbus reply delay: 0ms
Modbus timeout: 0ms
Data packing mode: QUAD
Use GPIB Modbus layout for F100: NO
+++ Device State Decoding +++
state 0: [NORMAL]
state 1: [ALARM]
state 2: [ACKNOWLEDGED]
```

```
state 3: [ISOLATE]
state 4: [PREALARM]
state 5: [MISSING]
state 6: [MAINTENANCE]
state 7: [FAULT]
state 8: [ACTIVE]
+++ Panel Communications +++
Port speed: 9600
Mimic Emulation: Disabled
Queue monitor mask: 0xFFFFFFFF
Emulated loop start: 0
Emulated loop count: 4
Active AAF Timers: 0
```

5.2 Panel Communications Setup

This option sets all parameters related to panel communications.

5.2.1 Port Speed

The SPIB board automatically detects which Panel`s Mimic interface is being used, the high speed or legacy bus and sets the baud rate accordingly. With the legacy bus the default baud rate is 9600 bps and 115,200 bps for the HS485 bus. Port Speed allows the user to change the default baud rate to either 300 or 115200.

5.2.2 Mimic Emulation Setup

The SPIB can be programmed to emulate a standard mimic panel in order to provide connection monitoring between the panel and the SPIB. Otherwise, the panel has no means of detecting the loss of communications with the SPIB (whereas the Modbus client does via the “COMMS” status bit described in Table 2-3 Status Registers

Global Status Register section).

The SPIB can be set to None, LED mimic (address 1 to 8), or LCD mimic (address 1 to 32).

5.2.3 Queue Monitor Mask

Sets the event queues that the SPIB handles. Currently there are 5 logical queues maintained by the panel, in decreasing priority: Alarms (numeric 0), Isolates (1), Loop Defects (2), System Defects (3) and Information (4). The mask sets the queue numbers that can affect the panel status. The mask is entered in hexadecimal as a bit-mapped value with bits corresponding to the numeric queues above (0x01=Alarm, Isolate=0x02, Loop Defects=0x04, etc). For example, to disable the Isolate queue only, a value of 0xFD could be used.

5.2.4 Emulated Loop Start

This parameter is used for setting the panel loop number of the first of the loops that the SPIB will respond to for loop emulation (provided the “Enable Loop Emulation” setting is activated in the connected panel).

This parameter can be set to 0 (the default value) to disable loop emulation, otherwise it can have any value from 1 to 20.

5.2.5 Emulated Loop Count

The SPIB can also restrict the range of loops it responds to by setting the Emulated Loop Count parameter; this allows other emulation devices to coexist within a smaller range of loop numbers if necessary. This can be set to any value from 1 to 4.

5.2.6 Active AAF Timers

The SPIB is capable of monitoring the countdown timers for up to 8 AAF/ADF blocks on the panel. This parameter allows setting how many AAF timers to monitor, and can be set from any value from 0 to 8. Note that only the first 8 AAF blocks can be monitored.

5.3 Modbus Communication Setup

This option is used to adjust all Modbus-related parameters. The available settings are outlined below:

5.3.1 Use RS485 Output

Selects whether the SPIB uses RS485 serial communications (via connectors K5 or K8 on the PCB), or RS232 communications (via 9-pin D-sub connector K4). Selecting RS485 mode allows multidrop operation so that one Modbus client can communicate with multiple servers over the same data cable.

5.3.2 Use ASCII Mode

Selects whether the SPIB uses ASCII mode or RTU (binary) mode when transmitting data. RTU mode is more efficient, as ASCII mode uses 2 bytes to transmit each byte of information.

5.3.3 Port Speed

This can be set to any value between 300 and 115200 baud, and must match the Modbus client's communication rate.

5.3.4 Server Address

Selects the server address for the SPIB. This parameter is essential in multidrop applications to allow the client to communicate with multiple Modbus servers over the same data cable.

5.3.5 Modbus Reply Delay

This parameter forces a delay between receiving a poll from the client & replying to it. This is intended for use in RS485 communications where the client may take a finite time after the last byte sent to switch to receive mode. This can occur in multi-tasking operating systems (e.g. Windows) if the Modbus communication process loses its time-slice as the last byte is transmitted. In such cases the first byte(s) of the SPIB's reply may be lost as the client RS485 hardware is still in transmit mode.

5.3.6 Modbus Timeout

Sets the amount of time the SPIB should wait for any Modbus communication from the client. If there are no Modbus requests received within this time period, the SPIB will stop responding to panel requests also, resulting in mimic timeout faults (if mimic emulation is enabled) or emulated loop devices returning Missing faults (if loop emulation is used by the panel). This can be set to 0 to disable timeout checking.

5.3.7 Data Packing Mode

Allows the use of the data-packing formats described above in Table 2-1 Loop Device States Data Packing. The Single (None), Double or Quad formats can be specified here.

5.3.8 Use GPIB Modbus Layout for F100

Setting this option makes the Modbus register layout match the one used the Pertronic GPIB-MF100 product. It should be used only on F100 panels where an SPIB is replacing an older GPIB-based interface, and it is not feasible or practical to change the Modbus monitoring system to use the default layout for the SPIB, which is a superset of the GPIB's layout.

Refer to the GPIB-MF100 manual for the revised register layout.

5.4 Loop Device State Decoding Setup

This option allows the relationship between the internal state flags held for each loop device and the Modbus register value for that device. The SPIB responds with:

```
Edit Device State Decoding.
  use the following keys to toggle the bits shown:
  1 - ALARM
  2 - ACKNOWLEDGE
  3 - ISOLATE
  4 - PREALARM
  5 - MISSING
  6 - FAULT
  7 – MAINTENANCE
  8 - ACTIVE
  state 1: [ALARM]
```

At this point the keys 1 to 8 toggle the individual bits for state 1. Press Enter to save the changes or Esc to skip to state 2, and so on.

As an example, if the monitoring system could not make a distinction made between an alarm & an acknowledged alarm, then state 1 could be set to [ALARM+ACKNOWLEDGE]. This way, the monitoring system would just see the value 1 for any alarm, acknowledged or not.

5.5 Save Configuration Data to Flash

This option saves the current SPIB configuration to Flash memory, so that it is restored on power-up or reset of the SPIB. This should be done after any action has modified the current (volatile) configuration data and it has been deemed to operate satisfactorily.

5.6 Revert to Saved Configuration

This option overwrites the current SPIB configuration with the saved configuration stored in Flash memory. The View Stored Options action is executed automatically after this is done.

5.7 Restore Default Configuration

This option overwrites the current SPIB configuration with the factory defaults. The View Stored Options action is executed automatically after this is done.

5.8 Export Configuration

This option outputs the SPIB configuration in a form that can be saved in a text file for use with the Import Configuration function (see below). This example output is the default configuration:

```
#==========================================
# Configuration export
# VER: x.xx (dd-mmm-yyyy)
#==========================================
Flags=0x05
QueueMask=0xFFFFFFFF
PanelBaudRate=9600
MimicAddress=None
EmuLoopBase=0
EmuLoopCount=4
ModbusBaudRate=19200
SlaveAddress=1
ModbusTimeout=0
```

```
    ModbusReplyDelay=0
    StatusLookup=0,1,2,4,8,16,64,32,128
    ActiveAafTimers=0
#==========================================
```

5.9 Import Configuration

This allows the importation of the SPIB configuration exported using the Export Configuration option above. Selecting Import starts a line-oriented interface which expects lines in a particular format, where each line sets a portion of the configuration.

```
--- Configuration import.
--- Enter configuration lines.
------ enter EXIT to finish, or QUIT to abort without updating.
```

The Import function ends when an EXIT or QUIT command is entered. The general format of each line is

```
<parameter>=<data>
```

Where <parameter> is one of the named items, and <data> is the corresponding value for the item. Lines starting with # are treated as comments & ignored. The special commands EXIT and QUIT complete the process, either updating the internal configuration (EXIT) or aborting without update (QUIT).

5.9.1 Parameters for Configuration Import

The table below gives all of the configurable options for the SPIB. Note that the import parser is not case-sensitive with respect to the parameter names.

The parameters represented in hexadecimal are interpreted as a sum (or binary OR) of single-bit values. So if the hexadecimal value is 0x1A (or 26 decimal = binary 00011010_2), say, then this represents the 3 items with values 0x10 (00010000_2), 0x08 (00001000_2) and 0x02 (00000010_2) all being set.

Parameter	Default Value	Description
Flags	0x05	Hexadecimal mask representing the SPIB's system flags. Valid values (others are reserved for future use) are: 0x01: Use RS485 interface for Modbus (else RS232). 0x02: Use ASCII mode for Modbus (else RTU). 0x04: Use Quad packing for loop device status. 0x08: Use Double packing for loop device status. 0x10: Use legacy F100 Modbus register layout.
QueueMask	0xFFFFFFFF	Hexadecimal mask representing the panel event queues the SPIB is monitoring. This is panel-specific, but typically the event queues are tagged with the following values: 0x01: Alarm 0x02: Isolate/Disable 0x04: Loop Faults 0x08: System Faults 0x10: System Information
PanelBaudRate	9600	Connection speed to the panel's RS485 bus connection. Should be left at default value for correct operation.
MimicAddress	None	Determines whether the SPIB should emulate a mimic device on the panel. This is to give the panel a means of determining whether the SPIB is functioning correctly. Possible values are: None: disabled LEDn: LED mimic (n=1..8) LCDn: LCD mimic (n=1..32)
EmuLoopBase	0	Base loop number for loop emulation. Use zero to disable, otherwise a value between 1 and 20.
EmuLoopCount	4	Number of loops to emulate.
ModbusBaudRate	19200	Connection speed to the Modbus interface. Valid range is 300..230400 bps.
SlaveAddress	1	Modbus server (slave) address for multidrop applications. Valid values are 1..254.
ModbusTimeout	0	Sets the timeout (in milliseconds) for Modbus requests made to the SPIB. See Section 5.3.6 for details.
ModbusReplyDelay	0	Sets the delay (in milliseconds) before replying to any Modbus requests. See Section 5.3.5 for details.

Parameter	Default Value	Description
StatusLookup	0,1,2,4,8,16,64,32,128	Sets the translation between loop device states & the Modbus register value returned. The list corresponds to Modbus values 0 to 15, so can contain up to 16 items representing the various loop states. The list values are bitwise-OR combinations of the following: 1: Alarm 2: Acknowledged Alarm 4: Isolate/Disable 8: Prealarm 16: Missing 32: Defect/Fault 64: Maintenance 128: Active Note that trailing zeroes in the list are not shown on Export, and missing entries at the end of the list are set to zero on Import.
ActiveAAFTimers	0	Select how many AAF/ADF timers the SPIB will monitor. See Section 5.2.6 for details.

Table 5-1: Configuration Parameters for Import

6. INSTALLATION

The SPIB board would normally be mounted in an alarm panel but can also be mounted in a separate case. The SPIB hardware occupies a standard Pertronic footprint that allows mounting on top of or in place of the Auxiliary Relay Board, alternatively the SPIB hardware can be mounted directly on the panel gear plate.

7. ORDERING INFORMATION

Product Code	Description
SPIB-MODBUS HLI	Modbus HLI (check interfacing required) (RS485 cable and standoffs included)
MOXA-MB3180	MOXA-1 Port RS-232/422/485 Modbus TCP to Serial Comm Gateway

Document Change History

Issue Number	Change Note	Date	Description of Changes	Author
0.01			First Draft	JPF
1.00			First release	JPF
2.00	CN2679	09.12.19	Additional Modbus functionality	JPF
2.1	CN3011	28.07.21	Minor updates and corrections	RJK
2.2	CN3181	19.05.22	High Speed RS485 compatibility	RJK
2.3	CN3367	28.08.23	AAF Timer functionality added	JE/RJK

8. PERTRONIC SALES AND TECHNICAL SUPPORT

New Zealand
Pertronic Industries Limited

Head Office
17 Eastern Hutt Road
Wingate
Lower Hutt
Phone +64 4 5673229
Fax +64 4 5673644
sales@pertronic.co.nz

Auckland
3 Gloucester Park Road
Onehunga
Auckland 1061
Phone +64 9 633 0226
Fax +64 9 633 0228

New Zealand website
www.pertronic.co.nz

Australia
Pertronic Industries Pty Limited

Melbourne
Unit B2
2A Westall Rd
Springvale
VIC 3171
Phone +61 3 9562 7577
sales.vic@pertronic.com.au

Sydney
Unit 9
38 South Stree
Rydalmere
NSW 2116
Phone +61 2 9638 7655
sales.nsw@pertronic.com.au

Brisbane
Unit 3
43-49 Sandgate Rd
Albion
QLD 4010
Phone +61 7 3255 2222
sales.qld@pertronic.com.au

Adelaide
65 Manton Street
Hindmarsh
SA 5007
Phone +61 8 8340 9533
sales.sa@pertronic.com.au

Perth
3/71 Beringarra Ave
Malaga
WA 6090
Phone +61 8 6555 3008
sales.wa@pertronic.com.au

Australian website
www.pertronic.com.au

USA
Pertronic Industries Inc

Phoenix
16597 N 92nd Street, Suite 110
Scottsdale
Arizona 85258
Phone +1 480 452 8330
Keith.Bowler@pertronic.com

Guilford
Connecticut 06437
Phone +1 203 598 1133
Raymond.Krickmier@pertronic.com

USA website
www.pertronic.com