PERTRONIC
0360 AUDIO VISUAL SIGN
(AS4214-2018)
TECHNICAL MANUAL
AUSTRALIA

Valid For:

PCB Hardware:	**v1.10.12**
PCB Firmware:	**v1.3.0**

Issue 3.1

The contents of this manual are copyright.

This document is to be used only for operating *Pertronic* Fire Alarm systems.

This document is not to be reproduced, photocopied or passed in part or whole to a third party without the express, written authorisation of Pertronic Industries Ltd

CONTENTS

1 Introduction 1

1.1 Functional Description 1

1.2 Features 1

1.3 Specification 2

1.4 PCB Layout 3

2 Installation 5

2.1 Two-Wire, Three-Wire and Four-Wire Activation 5

2.2 Operation 5

2.2.1 Two-Wire Mode 5

2.2.2 Three-Wire Mode 6

2.2.3 Four-Wire Mode 6

2.2.4 K9 and K10 Connection Configuration 6

2.3 Operation with Pertronic Loop Relay 6

3 Programming 8

3.1 Audio Output 8

3.2 Visual Settings 9

3.2.1 Top and Bottom LED Control 9

3.2.2 Initiate Countdown 9

3.2.3 Backlight Flashing / Steady 9

3.2.4 Backlight Brightness 9

3.2.5 Countdown Time 10

3.2.6 Alternating Flash 10

4 Configuration Settings for a typical Agent Release Installation 12

4.1 Extinguishing System Inoperative 12

4.2 Fire Alarm / Do Not Enter + Fire Alarm / Evacuate Area (with count down) 12

4.2.1 Fire Alarm / Do Not Enter 12

4.2.2 Fire Alarm / Evacuate Area 13

5 Product Codes 14

Document Change History 15

PERTRONIC SALES AND TECHNICAL SUPPORT 16

FIGURES

Figure 1-1: Audio Visual Sign (with optional LED Countdown Timer installed) 1
Figure 1-2: PCB Layout Configuration Points 3
Figure 2-1: Typical Two-Wire Installation 5
Figure 2-2: K9 and K10 Connection Configuration 6
Figure 4-1: Stage 1 Extinguishing Inoperative Tone and Display Configuration 12
Figure 4-2: Stage 1 and 2 Fire Alarm/Do Not Enter Tone and Display Configuration 13

TABLES

Table 1-1: DIP Switch Default Settings 4
Table 3-1: Stage 1 and Stage 2 Tone Selection Chart 8
Table 3-2: Top and Bottom Backlighting State Table 9
Table 3-3: Initiate Countdown Stage Table 9
Table 3-4: Backlight Flashing/Steady Table 9
Table 3-5: Backlight State Table 10
Table 3-6: Countdown Timer State Table 10
Table 3-7: Alternating Flash State Table 11
Table 4-1: Stage 1 Extinguishing System Inoperative Tone and Display Settings 12
Table 4-2: Stage 1 and 2 Fire Alarm/Do Not Enter Tone and Display Settings 12
Table 4-3: Stage 1 and 2 Fire Alarm/Evacuate Area Tone and Display Settings 13
Table 5-1: Product Codes 14

1 INTRODUCTION

1.1 Functional Description

The Pertronic Industries Audio Visual Sign has been designed to provide reliable visual and audible alerts as required by AS4214-2018 and ISO14520.

The Audio Visual Sign uses the latest LED technology to provide high visibility and better performance compared to other technologies.

An inbuilt microcontroller and amplifier enable the device to produce clear tones and voice messages at levels up to 98dBA.

An LED matrix is available as an option for visual indication of countdown time.

The Audio Visual Sign supports 2, 3, or 4-wire standard connections.

DIP Switch Configuration provides visual and tonal control for each of two stages.

Figure 1-1: Audio Visual Sign (with optional LED Countdown Timer installed)

1.2 Features

- Sleek, low-profile design
- Preloaded with 49 tones, including the T3 Tone, AS2220 Evac and Alert Tones, and voice messages
- Volume control for tone and voice messages
- Dual stage configuration options
- Optional LED Countdown display
- Low current consumption
- 2-wire, 3-wire, and 4-wire operation
- Large range of visual messages available

1.3 Specification

Cabinet:

Dimensions:	182mm (h) x 345mm (w) x 75mm (d)
Weight:	1.4Kg
Material:	1.2mm mild steel, powder coated beige

Power Supply: 19Vdc to 30Vdc

Backlight:

Technology:	Superbright LED's
Flashrate:	Selectable 0Hz (steady), 1.5Hz

Sound Level Output:

Sound pressure level at 1m (peak ± 3dB)
Evacuation, 98dBA @24Vdc
Alert tone, 96dBA @24Vdc

2, 3, or 4-Wire Connection:

Used for connection to standard 24V 2, 3, or 4-Wire cabling
Inactive current: 24V, 0mA (i.e. normal state)
Active current: Half Sign, Flashing, No Tone: 24V, 64mA pk, 38mA avg
Full Sign, Flashing, No Tone: 24V 113mA pk, 64mA avg
Countdown timer: Add 3mA
Evac Tone: Add 30mA

Tone Settings: SW1–SW6 of switch banks S1 and S2 are used to select the tone assigned to each stage of activation. Any of 49 tones is selectable for each Stage. Refer to Table 3-1

Visual Settings: SW7–SW11 of switch banks S1 and S2 are used to select Stage 1 and Stage 2 settings of the backlight and countdown matrix.

SW7 Top Sets the state of the top half of the sign for each stage:
OFF: Top half of the Sign turns OFF
ON: Top half of the Sign turns ON

SW8 Bottom: Sets the state of the bottom half of the sign for each stage:
OFF: Bottom half of the sign turns OFF
ON: Bottom half of the sign turns ON

SW9 Init Countdown:
Used to set which stage initiates the Countdown Timer:

Stages 1 and 2 OFF	Countdown Timer disabled
Stage1 ON:	Stage 1 initiates Countdown Timer
Stage 2 ON:	Stage 2 initiates Countdown Timer
Stage 1 and 2 ON	Stage 1 initiates Countdown Timer

SW10 Flashing: Sets the backlight for each stage to Flash or Not Flash:
ON: Flash at 1.5Hz
OFF: On Steady

SW11 Brightness:
Sets the LED brightness of the selected stage:
OFF: Sets Brightness of Backlight to 50%
ON: Sets Brightness of Backlight to 100%

Other Settings:

S7 SW2 Alt Flash:		Sets the backlight into flashing mode
	ON:	Alternating mode enabled
	OFF:	Alternating mode disabled
S7 SW3 FactTest:		Factory use only
	ON:	Factory Test
	OFF:	Normal Mode
S7 SW4 BOOT:		Factory use only
	ON:	Programming Mode
	OFF:	Normal Mode

Countdown Time: The countdown time can be set from 5 seconds to 90 seconds in 10-second increments using rotary switch VR1. Refer to Table 3-6.

Volume Control: The sound output level is adjustable using the Volume potentiometer VR1.This control provides an adjustment range of approximately 20 dBA.

1.4 PCB Layout

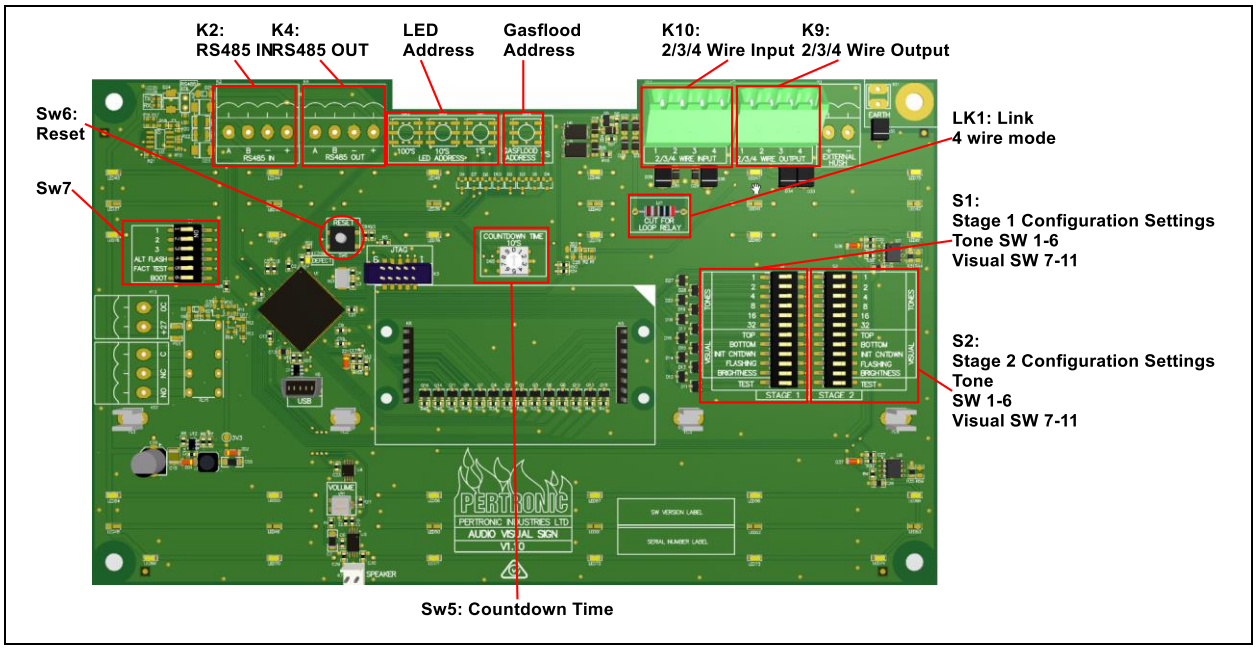

Figure 1-2: PCB Layout

DIP Switch Defaults for two versions of Audio Visual Sign			
Component	**Description**	**Defaults**	
		Stage 1	Stage 2
STAGE 1. Positions 1–12 = S1 STAGE 2, Positions 1–12 = S2	Position 1 1 select	ON	ON
	Position 2 2 select	ON	OFF
	Position 3 4 select	OFF	OFF
	Position 4 8 select	OFF	OFF
	Position 5 16 select	OFF	OFF
	Position 6 32 select	OFF	OFF
	Position 7 Visual Top	ON	ON
	Position 8 Visual Bot	OFF	ON
	Position 9 Visual Init Countdown	ON	OFF
	Position 10 Visual Flashing	ON	ON
	Position 11 Brightness	ON	ON

	Position 12 Test	OFF	OFF
S7	Position 1 (Not Used)	OFF	
	Position 2 ALT Flash	OFF	
	Position 3 Fact Test	OFF	
	Position 4 Boot	OFF	

Table 1-1: DIP Switch Default Settings

2 INSTALLATION

2.1 Two-Wire, Three-Wire and Four-Wire Activation

The Audio Visual Sign supports two-wire connections where the selection of stage is determined by the polarity of the DC voltage applied to the terminals. It may, optionally, be connected to two separate two-wire sounder circuits for independent control or to a three- wire driver circuit where appropriate.

A typical installation is shown in Figure 2-1.

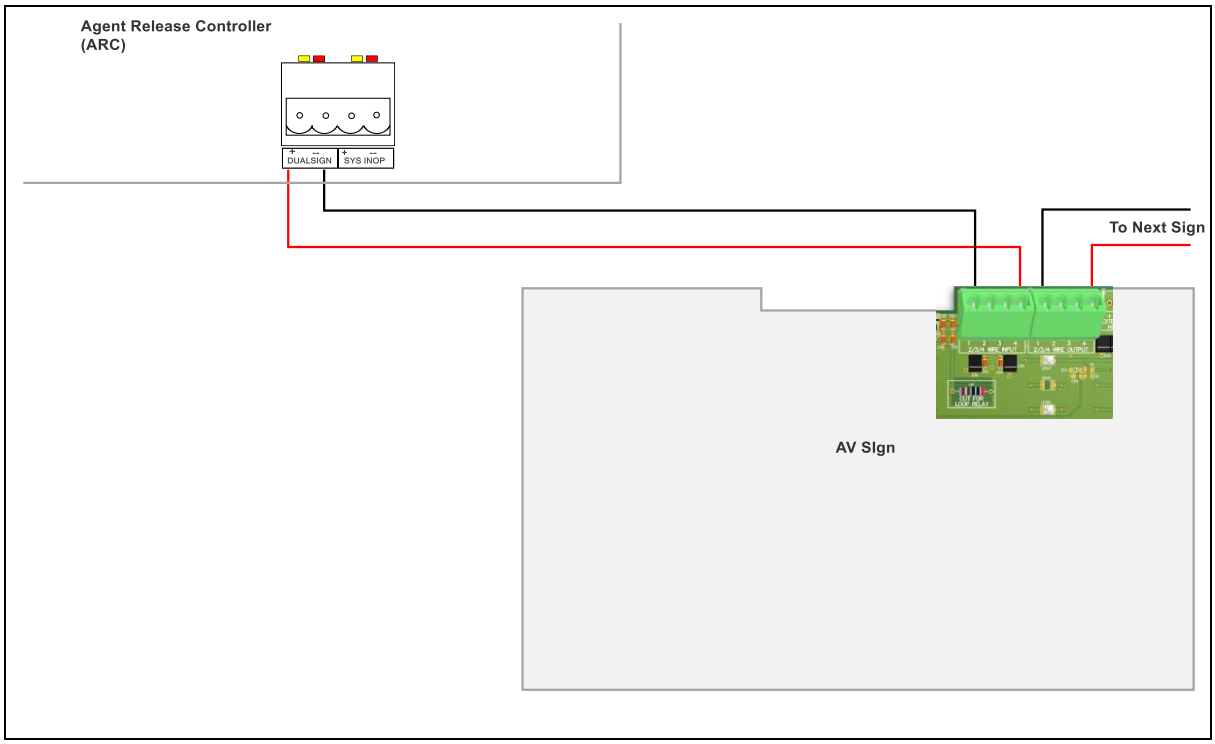

Figure 2-1: Typical Two-Wire Installation

Each Audio Visual Sign is daisy-chained to the Sign Stage 1/Sign Stage 2 Output of the Agent Release Controller using the 'Activation Input' and 'Activation Output' terminals. For the correct sequence of operation, the +ve and –ve outputs from the Agent Release Controller's Sign output must be wired to the respective inputs on the Audio Visual Sign. Failure to connect the signs with the correct polarity will result in the sign's staged sequence-of-operation being reversed.

2.2 Operation

2.2.1 Two-Wire Mode

This mode uses a reversal in polarity on two terminals to operate the Audio Visual Sign. A Sign is connected to the Gas Flood Controller via the Activation Input terminals labeled 1 and 4. If another Sign in connected to the first sign, the 1 and 4 output terminals of the first Sign are connected respectively to the 1 and 4 input connections of the second Sign. If the DC supply applies –ve voltage to terminal 1, Stage 1 mode is activated. Conversely, if the supply provides +ve voltage to terminal 1, Stage 2 mode is activated. Connection terminals 2 and 3 are not used in two-wire mode.

2.2.2 Three-Wire Mode

This mode uses a positive voltage applied to one or the other terminal to operate the Audio Visual Sign. When +ve voltage is applied to the terminal labeled 1, Stage 1 mode is activated; when +ve voltage is applied to the terminal labeled 4, Stage 2 is activated. The terminals labeled 2 and 3 are linked at each device and are used as a common negative.

2.2.3 Four-Wire Mode

This mode uses signals from two separate circuits to initiate Stage 1 and Stage 2. When +ve voltage is applied to terminal 1 and –ve is applied to terminal 3, Stage 1 mode is activated. When +ve voltage is applied to terminal 4 and –ve is applied to terminal 2, Stage 2 is activated. Because each stage is independently driven, either Stage may be activated separately, or both Stages may be activated at the same time.

2.2.4 K9 and K10 Connection Configuration

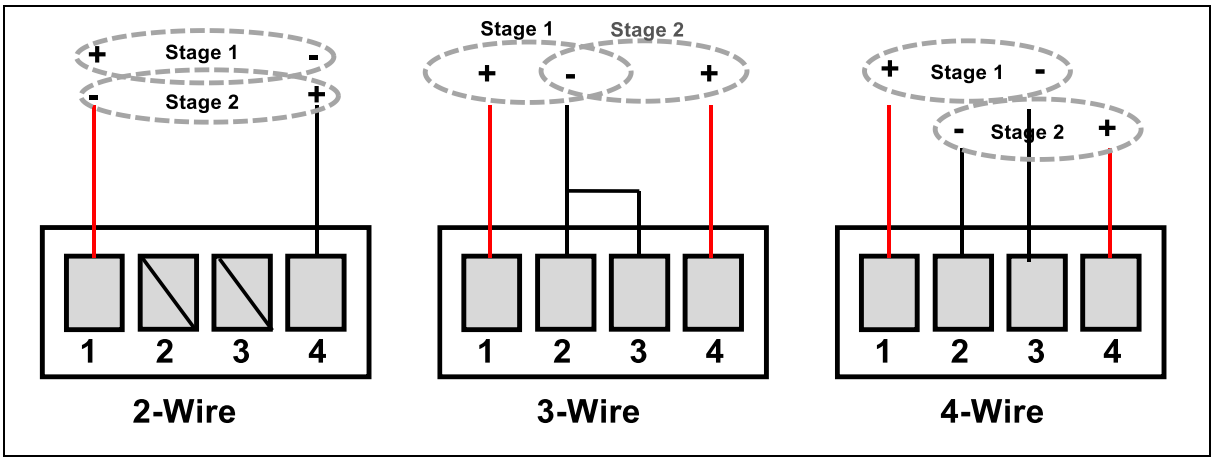

Figure 2-2: K9 and K10 Connection Configuration

WARNING

For correct operation, the wiring configuration of each ***Pertronic Audio Visual Sign*** must be identical to that of any other Sign on the system. Failure to connect the terminals with the correct polarity or configuration will result in incorrect operation and/or damage to the components.

2.3 Operation with Pertronic Loop Relay

To operate an AV sign in the 4-Wire mode using Pertronic Loop relays the link labelled “cut for loop relay” must be removed.

3 PROGRAMMING

3.1 Audio Output

The Audio Visual Sign can generate any 2 of 49 pre-programmed tones. By factory default, Stage 1 tone is the No. 3 tone and voice message, and Stage 2 is the No. 1 tone with voice.

Typically Stage 2 should be set to Tone 5 (T3 Cadence with voice)

Tones are assigned to each Stage by using the Stage 1 and Stage 2 Tone DIP switches marked 1–32 and follow the DIP Switch pattern outlined below.

No	DIP Switch Configuration						Tone Description
	1	2	4	8	16	32	
0							No Tone
1	■						500-1200Hz 3.75 sec / 0.25sec. NZS4512:2003 Evacuation Tone with Voice
2		■					500-1200Hz 3.75 sec / 0.25sec NZS4512:2003 Evacuation Tone Only
3	■	■					**420Hz 0.625 sec ON, 625 msec OFF – Intermittent Alert Tone with Voice**: NZS4512:2003
4			■				420Hz 0.625 sec ON, 0.5 sec OFF – Intermittent Alert Tone Only
5	■		■				**T3 Cadence with Voice**
6		■	■				T3 Cadence Only
7	■	■	■				Simulated Bells
8				■			PA400 Tone
9	■			■			Claxon (Star Trek)
10		■		■			400- 700Hz 1.5 sec Whoop
11	■	■		■			800 / 1000Hz @ 1 Hz - Sweeping
12			■	■			400 / 450Hz @ 0.5Hz Tone.
13	■		■	■			2400 / 2900Hz @ 7Hz - Sweeping
14		■	■	■			2400 / 2900Hz @ 1Hz - Sweeping
15	■	■	■	■			500 / 1200Hz @ 1Hz - Sweeping
16					■		1200 / 500Hz @ 1Hz - DIN / PFEER Prepare to Abandon Platform
17	■				■		2400 / 2900Hz @ 2 Hz - Alternating
18		■			■		1000 Hz @ 1Hz - Intermittent
19	■	■			■		800 / 1000Hz @ 0.875Hz - Alternating
20			■		■		2400Hz @ 1Hz Intermittent
21	■		■		■		800Hz 0.25 sec ON, 1 sec OFF - Intermittent
22		■	■		■		800Hz - Continuous
23	■	■	■		■		660Hz 150mS ON, 150mS OFF - Intermittent
24				■	■		544Hz (100mS) / 440 Hz (400mS) - NF S 32-001
25	■			■	■		660Hz 1.8 seconds ON, 1.8 seconds OFF - Intermittent
26		■		■	■		1.4kHz-1.6kHz, 2Hz
27	■	■		■	■		660Hz - Continuous
28			■	■	■		544Hz / 440Hz @ 1Hz - Alternating
29	■		■	■	■		544Hz @ 0.875 seconds - Intermittent
30		■	■	■	■		800Hz @ 2Hz - Intermittent
31	■	■	■	■	■		800 / 1000Hz @ 25Hz - Sweeping
32						■	2400 / 2900Hz @ 25Hz - Sweeping
33	■					■	554Hz - Continuous
34		■				■	440Hz - Continuous
35	■	■				■	800 / 1000Hz @ 7Hz - Sweeping
36			■			■	660 / 1200Hz @ 1Hz - Sweeping
37	■		■			■	1000/650Hz Two-Tone Chime.
38		■	■			■	745Hz @ 1Hz Intermittent
39	■	■	■			■	1000 & 2000Hz @ 0.5 sec Alternating
40				■		■	1000Hz Continuous - PFEER Toxic Gas
41	■			■		■	2000Hz Continuous
42		■		■		■	1200Hz Continuous
43	■	■		■		■	800Hz/1000Hz @4HZ alternating as per E2S tone 2
44			■	■		■	RH3 Tone 500Hz – 1400 Hz @ 5Hz repetition rate
45	■		■	■		■	'SOS' in Morse code
46		■	■	■		■	300Hz - 1400Hz - 300Hz sweep
47	■	■	■	■		■	3480 Hz pulsed at 130ms on/off - PLS
48					■	■	3x800Hz+1000Hz tones, on/off (0.5s)+silence(1.5s)+"Emergency…has operated. Evacuate now" message
49	■				■	■	420Hz tone, on/off (0.63s)+"Warning the first stage.. has operated. Stand by for further instructions" message

Table 3-1: Stage 1 and Stage 2 Tone Selection Chart

3.2 Visual Settings

The Top and Bottom backlight LED's, Flashrate and Brightness, and the Countdown Timer (if fitted) are configured using the Visual Settings DIP Switches on switch banks S1 and S2.

3.2.1 Top and Bottom LED Control

The Visual Links 'Top' and Bott' (SW7 and SW8) are used for independently controlling the state of the backlight during the Stage 1 and Stage 2 states. Refer toTable 3-2

Top Dip Switch	Bot DIP Switch	Backlight
OFF	OFF	Both Top and Bottom LED Backlights remain OFF during the selected stage.
ON	OFF	The Top half of the Backlight turns ON during the selected stage.
OFF	ON	The Bottom half of the Backlight turns ON during the selected stage.
ON	ON	Both Top and Bottom LED Backlights Turn ON during the selected stage.

Table 3-2: Top and Bottom Backlighting State Table

3.2.2 Initiate Countdown

The Countdown Timer can be initiated by either a Stage 1 or Stage 2 activation; which stage is selected by the Stage 1 and Stage 2 'Init Cntdwn' DIP switches (SW9). Refer to Table 3-3. (Applicable only when the Countdown Timer module is installed.)

Stage 1 Dip Switch	Stage 2 Dip Switch	Initiate Countdown Timer Dip Swiches
OFF	OFF	The Countdown Timer remains inactive.
OFF	ON	The Countdown Timer commences upon a Stage 2 activation.
ON	X (Don't care)	The Countdown Timer commences upon a Stage 1 activation.

Table 3-3: Initiate Countdown Stage Table

3.2.3 Backlight Flashing / Steady

The backlight can be set to flash or to remain steady during each stage. When set to flash (Flash DIP Switch SW10 ON), the backlight flashes at a rate of 1.5Hz. Conversely, when the DIP switch SW10 is turned OFF, the backlight remains steady. Refer to Table 3-4.

Flashing Dip Switch	Backlight
OFF	The Backlight remains steady during the selected stage.
ON	The Backlight flashes at 1.5Hz during the selected stage.

Table 3-4: Backlight Flashing/Steady Table

3.2.4 Backlight Brightness

The backlight brightness can be reduced for situations where low current consumption outweighs the need for ultra bright signs. The brightness is stage-

selectable using the Stage 1 and Stage 2 Brightness DIP Switch SW11. When the Brightness DIP Switch is Turned OFF, the Brightness is reduced to 50%.

Brightness Dip Switch	Brightness
ON	100% Brightness
OFF	50% Brightness

Table 3-5: Backlight State Table

3.2.5 Countdown Time

The Countdown Time Dial (SW5) is used to select the countdown time when either Stage 1 or 2 has SW9 turned ON. The Countdown time can be adjusted between 5 seconds and 90 seconds. (Applicable only when the Countdown Timer module is installed and SW9 is ON.)

Dial Position	Time
0	5 second countdown
1	10 second countdown
2	20 second countdown
3	30 second countdown
4	40 second countdown
5	50 second countdown
6	60 second countdown
7	70 second countdown
8	80 second countdown
9	90 second countdown

Table 3-6: Countdown Timer State Table

NOTE:

1. The countdown display provides supplementary indication to personnel: it displays the time remaining until another event occurs, such as an Automatic Discharge or Sliding Door closure.
2. When two-wire connected, a Manual Activation at the panel will not cause the Countdown Timer to expire.

3.2.6 Alternating Flash

The Alternating Flash feature is used to alternately flash the bottom and top backlight LED's, if set to flash—that is, so they illuminate at opposite times. When the Alt Flash DIP Switch (S2, SW2) is turned ON, the Top and Bottom Backlight LED's Flash alternately one at a time.

When the ALT Flash DIP Switch is turned OFF, the Top and Bottom Backlight LED's Flash on and off in unison. Refer to Table 3-7 .

ALT Flash Dip Switch	Top Dip Switch	Bottom Dip Switch	Flashing Dip Switch	Backlight LED's Flash Pattern
X (Don't care)	OFF	OFF	X	Backlight OFF.
	OFF	ON	OFF	Only Bottom Backlight ON.
	ON	OFF	ON	Only Top Backlight ON.
OFF	ON	ON	ON	Top and Bottom Backlight Flash in Unison.
ON	ON	ON	ON	Alternate Flashing of Top and Bottom Backlight

Table 3-7: Alternating Flash State Table

4 CONFIGURATION SETTINGS FOR A TYPICAL AGENT RELEASE INSTALLATION

4.1 Extinguishing System Inoperative

Fascia	Stage	Tone	Count Down	Order Codes
Extinguishing System Inoperative	1	No Tone	Not Used	AVS-B AV Sign AVD-ESI-A Fascia

Table 4-1: Stage 1 Extinguishing System Inoperative Tone and Display Settings

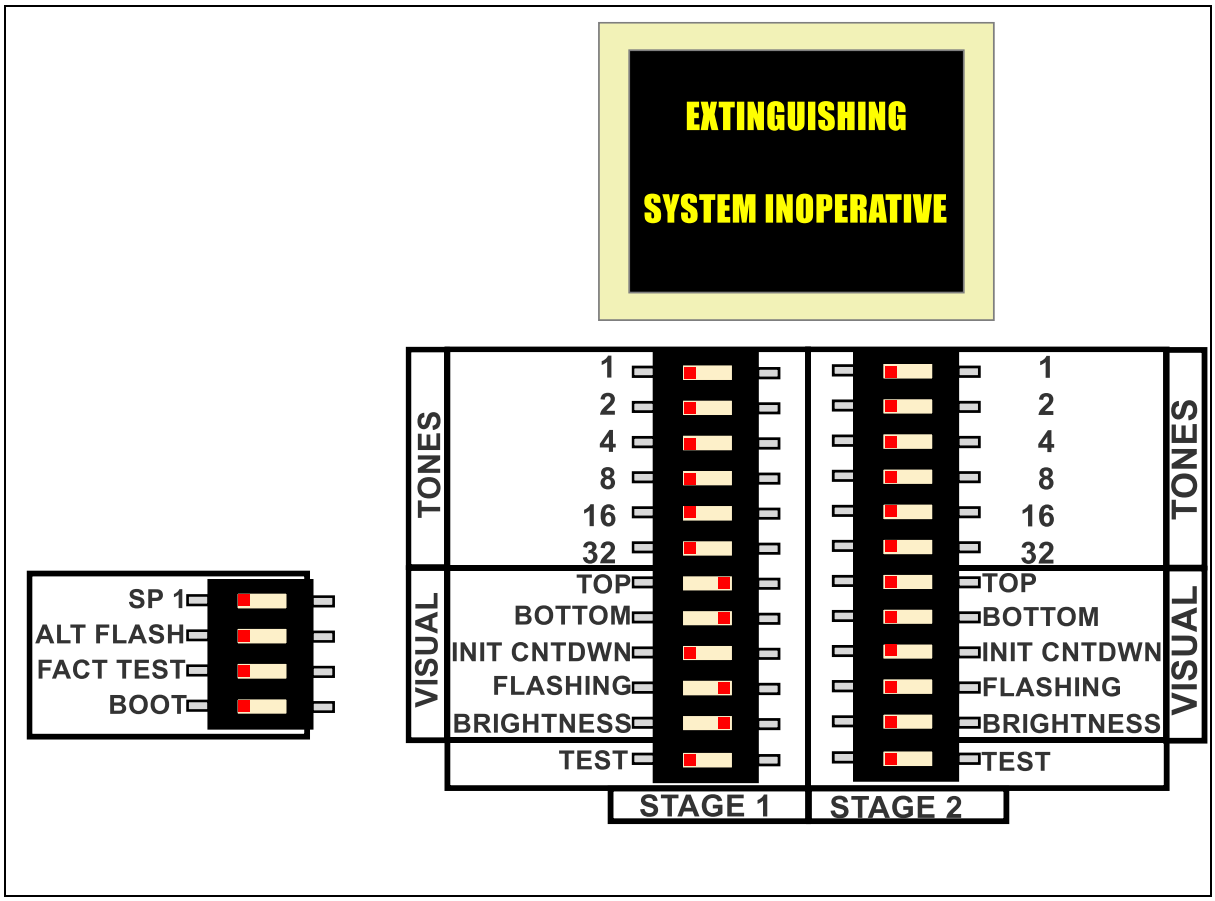

Figure 4-1: Stage 1 Extinguishing Inoperative Tone and Display Configuration

4.2 Fire Alarm / Do Not Enter + Fire Alarm / Evacuate Area (with count down)

4.2.1 Fire Alarm / Do Not Enter

Fascia	Stage	Tone	Count Down	Order Codes
Fire Alarm	1	Alert Tone(3)	OFF	AVS-C AV Sign
Do Not Enter	2	Evac Tone(5)	ON (30sec)	AVD-FADNE-R Fascia

Table 4-2: Stage 1 and 2 Fire Alarm/Do Not Enter Tone and Display Settings

4.2.2 Fire Alarm / Evacuate Area

Fascia	Stage	Tone	Count Down	Order Codes
Fire Alarm	1	Alert Tone(3)	OFF	AVS-C AV Sign
Evacuate Area	2	Evac Tone(5)	ON (30sec)	AVD-FADNE-R Fascia

Table 4-3: Stage 1 and 2 Fire Alarm/Evacuate Area Tone and Display Settings

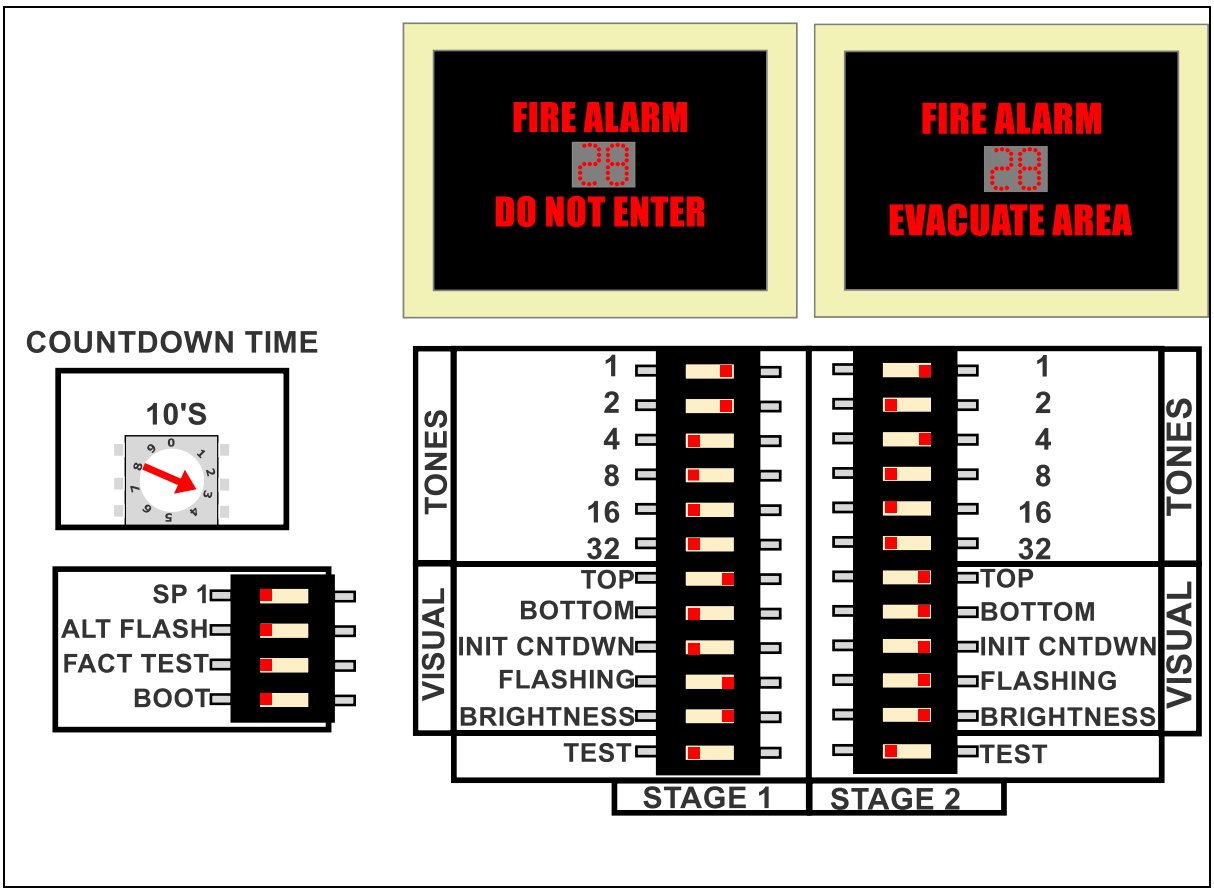

Figure 4-2: Stage 1 and 2 Fire Alarm/Do Not Enter Tone and Display Configuration

5 PRODUCT CODES

Product Code	Description
Countdown Timer Version	
AVS-C	Audio Visual Sign complete with Countdown module
AVDC-WSFD-R	A/V Sign Countdown Fascia, Warning Sliding Fire Door, Red
AVDC-DNEGD-R	A/V Sign, Countdown Fascia, Do Not Enter, Gas Discharged, Red
AVDC-FDC-R	A/V Sign, Countdown Fascia, Fire Door Closing, Red
AVDC-FADNE-R	A/V Sign, Countdown Fascia, Fire Alarm, Do Not Enter, Red
AVDC-FAEA-R	A/V Sign, Countdown Fascia, Fire Alarm, Evacuate Area, Red
Standard Version	
AVS-B	Audio Visual Sign
AVD-DNEGD-R	A/V Sign Fascia, Do Not Enter, Gas Discharged, Red
AVD-ESI-A	A/V Sign Fascia, Extinguishing System Inoperative, Amber
AVD-FA-R	A/V Sign Fascia, Fire Alarm, Red
AVD-FDC-R	A/V Sign Fascia, Fire Door Closing, Red
AVD-FADNE-R	A/V Sign Fascia, Fire Alarm, Do Not Enter, Red
AVD-FAEA-R	A/V Sign Fascia, Fire Alarm, Evacuate Area, Red
AVD-WSFD-R	A/V Sign Fascia, Warning Sliding Fire Door, Red
AVD-CFDNE-R	A/V Sign, Fascia, Carpark Fire, Do Not Enter, Red
AVD-FAI-B	A/V Sign, Fascia, Fire Alarm Isolated, Blue
AVD-FAO-B	A/V Sign, Fascia, Fire Alarm Off, Blue
AVD-GD-B	A/V Sign, Fascia, Gas Discharged, Blue
AVD-GR-B	A/V Sign Fascia, Gas Released, Blue
AVD-FDI-B	A/V Sign, Fascia, Fire Detectors, Isolated, Blue
AVD-FPI-A	A/V Sign, Fascia, Fire Panel, Isolated, Amber
AVD-FPI-B	A/V Sign, Fascia, Fire Panel Isolated, Blue
Weatherproof Version	
AVS-WP	Audio Visual Sign, IP66 weatherproof version
AVD-ESI-A-WP	A/V Sign Fascia, Extinguishing System Inoperative, Amber, Weatherproof
AVD-FADNE-R-WP	A/V Sign Fascia, Fire Alarm, Do Not Enter, Red, Weatherproof
AVD-FAEA-R-WP	A/V Sign Fascia, Fire Alarm, Evacuate Area, Red, Weatherproof
AVSCM	Countdown Module for Audio Visual Sign

Table 5-1: Product Codes

Document Change History

Issue Number	Date	Reason for Update	Description of Changes	Author
Issue 1	April 2011	Initial release		ShaneR
Issue 2	November 2013	CN1714	Operation with Pertronic Loop Relay. Updated PCB layout. Added section 2.3, section 4. Fig 2,Fig 3 updated.	RDB
Issue 3	June 2023	CN3329	Added tone 48 and 49. New PCB. Reformatted	RJK
Issue 3.1	Nov 2024	CN4065	Updated, corrected diagram 2.2	RJK

PERTRONIC SALES AND TECHNICAL SUPPORT

New Zealand
Pertronic Industries Limited

Head Office

17 Eastern Hutt Road
Wingate
Lower Hutt
Phone +64 4 5673229
Fax +64 4 5673644
sales@pertronic.co.nz

Auckland

3 Gloucester Park Road
Onehunga
Auckland 1061
Phone +64 9 633 0226
Fax +64 9 633 0228

New Zealand Website
www.pertronic.co.nz

Australia
Pertronic Industries Pty Limited

Melbourne

Unit B2
2A Westall Rd
Springvale
VIC 3171
Phone +61 3 9562 7577
sales.vic@pertronic.com.au

Sydney

Unit 9
38 South Stree
Rydalmere
NSW 2116
Phone +61 2 9638 7655
sales.nsw@pertronic.com.au

Brisbane

Unit 3
43-49 Sandgate Rd
Albion
QLD 4010
Phone +61 7 3255 2222
sales.qld@pertronic.com.au

Adelaide

65 Manton Street
Hindmarsh
SA 5007
Phone +61 8 8340 9533
sales.sa@pertronic.com.au

Perth

3/71 Beringarra Ave
Malaga
WA 6090
Phone +61 8 6555 3008
sales.wa@pertronic.com.au

Australian website
www.pertronic.com.au

USA
Pertronic Industries Inc

Phoenix
16597 N 92nd Street, Suite 110
Scottsdale
Arizona 85258
Phone +1 480 452 8330
Keith.Bowler@pertronic.com

Guilford
Connecticut 06437
Phone +1 203 598 1133
Raymond.Krickmier@pertronic.com

USA website
www.pertronic.com